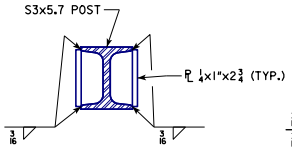

SECTION D-D

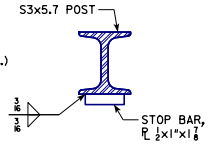

SECTION E-E

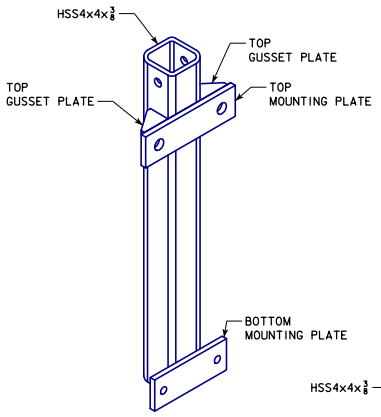

POST SOCKET ISOMETRIC VIEW

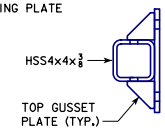

TOP VIEW

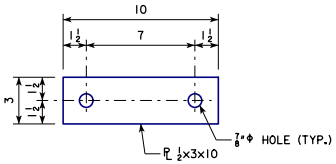

TOP MOUNTING PLATE

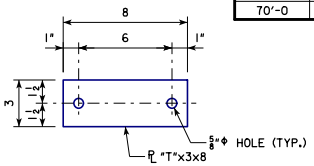

BOTTOM MOUNTING PLATE
(FOR PLATE THICKNESS, "T", SEE BRIDGE RAIL POST DATA TABLE)

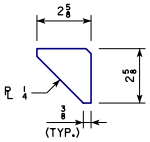

TOP GUSSET PLATE

BRIDGE RAIL POST STRUCTURAL STEEL

		REINFORCED CONCRETE BOX BEAMS			PRETENSIONED PRESTRESSED CONCRETE BOX BEAMS				
	SPAN	30'-0	40'-0	50'-0	30'-0	40'-0	50'-0	60'-0	70'-0
ONE POST ASSEMBLY	POST S3 x 5.7 (LBS.)	26.8	26.8	29.6	23.9	23.9	26.8	26.8	29.6
	POST SOCKET ASSEMBLY (LBS.)	48.8	48.8	58.3	39.3	39.3	48.8	48.8	58.3
	BOLTS, STUDS, NUTS, WASHERS (LBS.)* (1) 5/8"Φ x 1 1/4" BOLT W/ NUT & WASHER (1) 5/8"Φ x 5" BOLT W/ NUT & WASHER (2) 3/4"Φ x 9" BOLTS (2) 3/4"Φ x 2 1/4" COUPLING NUTS (2) 3/4"Φ x 3" STUDS W/ NUTS & WASHERS (2) 1/2"Φ x 3" BOLTS (2) 1/2"Φ x 1 3/4" COUPLING NUTS (2) 1/2"Φ x 2 3/4" STUDS W/ NUTS & WASHERS	7.1	7.1	7.1	7.1	7.1	7.1	7.1	7.1
	WEIGHT PER ASSEMBLY (LBS.)	82.7	82.7	95.0	70.3	70.3	82.7	82.7	95.0
NUMBER OF POSTS		20	26	32	20	26	32	38	46
TOTAL WEIGHT (LBS.)		1654	2150	3040	1406	1828	2646	3143	4370

BRIDGE RAIL POST DATA TABLE

SPAN	POST SOCKET "T"	POST SOCKET "U"	POST SOCKET "V"	POST "W"	POST "X"
REINFORCED CONCRETE BOX BEAMS					
30'-0	7/8	2'-2	1'-6	4'-6	1'-10 1/2
40'-0	7/8	2'-2	1'-6	4'-6	1'-10 1/2
50'-0	1	2'-8	2'-0	5'-0	2'-4 1/2
PRETENSIONED PRESTRESSED CONCRETE BOX BEAMS					
30'-0	3/4	1'-8	1'-0	4'-0	1'-4 1/2
40'-0	3/4	1'-8	1'-0	4'-0	1'-4 1/2
50'-0	7/8	2'-2	1'-6	4'-6	1'-10 1/2
60'-0	7/8	2'-2	1'-6	4'-6	1'-10 1/2
70'-0	1	2'-8	2'-0	5'-0	2'-4 1/2

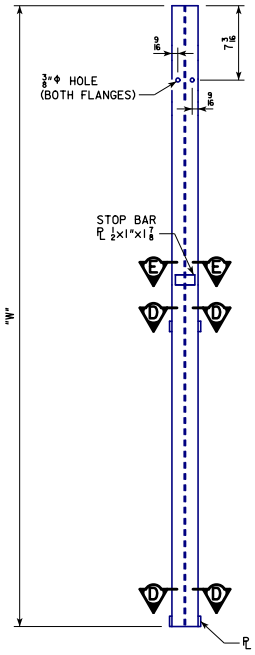

BACK VIEW

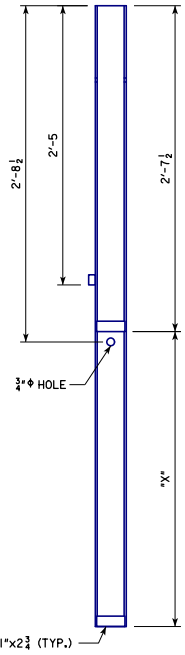

SIDE VIEW

S3x5.7 POST DETAILS

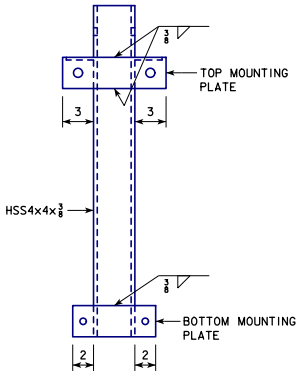

FRONT VIEW

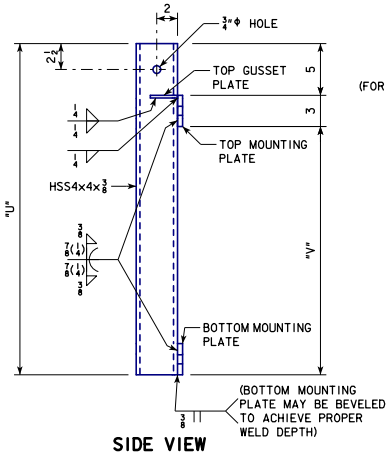

SIDE VIEW

POST SOCKET DETAILS

LATEST REVISION DATE

APPROVED BY BRIDGE ENGINEER

IOWADOT Highway Division

STANDARD DESIGN - 24'-0 ROADWAY, SINGLE SPAN

CONCRETE BOX BEAM BRIDGES

DECEMBER, 2016

BRIDGE RAIL POST DETAILS (SHEET 2 OF 2)

B24-65-16