# BILL OF REINFORCING FOR ONE HEADWALL 0° SKEW CULVERT SPAN x CULVERT HEIGHT

| BAR | LOCATION | SHAPE | 12'-0 x 12'-0 NO. | LENGTH | WEIGHT | 12'-0 x 10'-0 NO. | LENGTH | WEIGHT | 12'-0 x 8'-0 NO. | LENGTH | WEIGHT | 12'-0 x 6'-0 NO. | LENGTH | WEIGHT |
|---|---|---|---|---|---|---|---|---|---|---|---|---|---|---|
| 5fa | FENCE ANCHOR (GALV.) | | 2 | 3'-1 | 6 | 2 | 3'-1 | 6 | 2 | 3'-1 | 6 | 2 | 3'-1 | 6 |
| 4b1 | WINGWALL, B.F.H. | | 2 | 40'-11 | 57 | 2 | 34'-9 | 46 | 2 | 28'-7 | 38 | 2 | 22'-5 | 30 |
| 4b2 | WINGWALL, B.F.H. | | 20 VAR | 2 EACH 11'-8: 39'-6 | 342 | 16 VAR | 2 EACH 11'-8: 33'-4 | 240 | 12 VAR | 2 EACH 11'-8: 27'-2 | 156 | 8 VAR | 2 EACH 11'-8: 21'-0 | 87 |
| 5b3 | WINGWALL, F.F.H. | | 2 | 40'-11 | 90 | 2 | 34'-9 | 72 | 2 | 28'-7 | 60 | 2 | 22'-5 | 47 |
| 5b4 | WINGWALL, F.F.H. LONG | | 22 VAR | 2 EACH 8'-7: 39'-6 | 552 | 18 VAR | 2 EACH 8'-7: 33'-4 | 393 | 14 VAR | 2 EACH 8'-7: 27'-2 | 261 | 10 VAR | 2 EACH 8'-7: 21'-0 | 154 |
| 5b5 | INTERIOR WALLS, BOTH F. H. | | 42 VAR | 2 EACH 4'-10: 27'-3 | 703 | 34 VAR | 2 EACH 4'-10: 23'-3 | 498 | 26 VAR | 2 EACH 4'-11: 19'-3 | 328 | 18 VAR | 2 EACH 5'-1: 15'-3 | 191 |
| 4c1 | WINGWALL, F.F.V. | | 76 VAR | 2 EACH 2'-10: 14'-10 | 448 | 64 VAR | 2 EACH 2'-10: 12'-11 | 337 | 52 VAR | 2 EACH 2'-10: 11'-0 | 240 | 40 VAR | 2 EACH 2'-10: 9'-0 | 158 |
| 4c2 | WINGWALL, F.F.V. | | 4 | 13'-7 | 36 | 2 | 12'-0 | 16 | 2 | 10'-0 | 13 | 2 | 8'-0 | 11 |
| 4c3 | INTERIOR WALLS, BOTH F. V. | | 4 | 1'-9 | 5 | 4 | 1'-9 | 5 | 4 | 1'-9 | 5 | 4 | 1'-9 | 5 |
| 4c4 | INTERIOR WALLS, BOTH F. V. | | 100 VAR | 2 EACH 2'-0: 12'-11 | 498 | 84 VAR | 2 EACH 2'-0: 10'-11 | 362 | 68 VAR | 2 EACH 1'-11: 8'-10 | 244 | 52 VAR | 2 EACH 1'-11: 6'-10 | 152 |
| 5c5 | WINGWALL, B.F.V. | | 12 VAR | 2 EACH 2'-10: 4'-6 | 46 | 12 VAR | 2 EACH 2'-10: 4'-6 | 46 | 12 VAR | 2 EACH 2'-10: 4'-6 | 46 | 12 VAR | 2 EACH 2'-10: 4'-6 | 46 |
| 5c6 | WINGWALL, B.F.V. | | 64 VAR | 2 EACH 8'-10: 18'-10 | 923 | 52 VAR | 2 EACH 8'-10: 16'-11 | 698 | 40 VAR | 2 EACH 8'-10: 15'-0 | 497 | 28 VAR | 2 EACH 8'-10: 13'-0 | 319 |
| 5c7 | WINGWALL, B.F.V. | | 50 | 10'-6 | 548 | 38 | 10'-6 | 416 | 26 | 10'-6 | 285 | — | — | — |
| 5c8 | WINGWALL, B.F.V. | | 4 | 17'-7 | 73 | 2 | 16'-11 | 35 | 2 | 15'-0 | 31 | 2 | 13'-0 | 27 |
| | | | | | | | | | | | | | | |
| 4d1 | APRON, LONGITUDINAL, BOTTOM | | 25 | 27'-6 | 459 | 25 | 23'-6 | 392 | 25 | 19'-6 | 326 | 25 | 15'-6 | 259 |
| 4d2 | APRON, LONGITUDINAL, BOTTOM | | 6 | 35'-8 | 143 | 6 | 29'-6 | 118 | 6 | 23'-5 | 94 | 6 | 17'-4 | 69 |
| | | | | | | | | | | | | | | |
| 6f1 | APRON, LONGITUDINAL, TOP | | 37 | 27'-6 | 1528 | 37 | 23'-6 | 1306 | 37 | 19'-6 | 1084 | 37 | 15'-6 | 861 |
| 6f2 | APRON, LONGITUDINAL, TOP | | 16 VAR | 2 EACH 5'-10: 24'-10 | 368 | 14 VAR | 2 EACH 4'-6: 20'-10 | 266 | 10 VAR | 2 EACH 5'-10: 16'-10 | 170 | 8 VAR | 2 EACH 4'-6: 12'-10 | 104 |
| 6f3 | APRON, LONGITUDINAL, TOP | | 2 | 40'-11 | 129 | 2 | 34'-9 | 104 | 2 | 28'-7 | 86 | 2 | 22'-5 | 67 |
| | | | | | | | | | | | | | | |
| 4i1 | PARAPET, VERTICAL | | 79 | 6'-1 | 321 | 77 | 6'-1 | 313 | 77 | 6'-1 | 313 | 77 | 6'-1 | 313 |
| 7j1 | PARAPET, HORIZONTAL | | 4 | 39'-8 | 324 | 4 | 39'-0 | 319 | 4 | 39'-0 | 319 | 4 | 38'-8 | 316 |
| | | | | | | | | | | | | | | |
| 6m1 | APRON, TRANS., TOP | | 34 VAR | 52'-3: 39'-10 | 2483 | 29 VAR | 49'-8: 39'-2 | 2039 | 23 VAR | 47'-5: 39'-2 | 1576 | 18 VAR | 45'-3: 38'-10 | 1193 |
| 6m2 | APRON, TRANS., BOTTOM | | 24 VAR | 45'-3: 33'-10 | 1469 | 20 VAR | 49'-0: 39'-6 | 1401 | 16 VAR | 41'-0: 33'-6 | 903 | 12 VAR | 38'-10: 33'-4 | 650 |
| | | | | | | | | | | | | | | |
| 6p1 | CURTAIN, HORIZONTAL | | 4 | 38'-3 | 230 | 4 | 37'-11 | 228 | 4 | 37'-11 | 228 | 4 | 37'-9 | 227 |
| 6p2 | CURTAIN, HORIZONTAL | | 8 | 18'-7 | 223 | 8 | 16'-1 | 193 | 8 | 13'-7 | 163 | 8 | 11'-2 | 134 |
| | | | | | | | | | | | | | | |
| 6s1 | WING SLOPE, BOTH F. | | 4 | 7'-8 | 46 | 4 | 7'-8 | 46 | 4 | 7'-8 | 46 | 4 | 7'-8 | 46 |
| 6s2 | WING SLOPE, BOTH F. | | 4 | 37'-6 | 225 | 4 | 31'-0 | 186 | 4 | 24'-6 | 147 | 4 | 18'-0 | 108 |
| 6s3 | WING SLOPE, F.F. | | 2 | 42'-9 | 134 | 2 | 36'-3 | 109 | 2 | 29'-9 | 89 | 2 | 23'-3 | 70 |
| 6s4 | INTERIOR WALLS, BOTH F. | | 4 | 29'-10 | 179 | 4 | 25'-4 | 152 | 4 | 20'-10 | 125 | 4 | 16'-5 | 98 |
| | | | | | | | | | | | | | | |
| 5t1 | CURTAIN, VERTICAL | | 51 | 8'-0 | 426 | 47 | 7'-6 | 368 | 43 | 7'-0 | 314 | 39 | 6'-6 | 264 |

| BAR | 10'-0 x 12'-0 NO. | LENGTH | WEIGHT | 10'-0 x 10'-0 NO. | LENGTH | WEIGHT | 10'-0 x 8'-0 NO. | LENGTH | WEIGHT | 10'-0 x 6'-0 NO. | LENGTH | WEIGHT | BAR |
|---|---|---|---|---|---|---|---|---|---|---|---|---|---|
| 5fa | 2 | 3'-1 | 6 | 2 | 3'-1 | 6 | 2 | 3'-1 | 6 | 2 | 3'-1 | 6 | 5fa |
| 4b1 | 2 | 40'-11 | 57 | 2 | 34'-9 | 46 | 2 | 28'-7 | 38 | 2 | 22'-5 | 30 | 4b1 |
| 4b2 | 20 VAR | 2 EACH 11'-8: 39'-6 | 342 | 16 VAR | 2 EACH 11'-8: 33'-4 | 240 | 12 VAR | 2 EACH 11'-8: 27'-2 | 156 | 8 VAR | 2 EACH 11'-8: 21'-0 | 87 | 4b2 |
| 5b3 | 2 | 40'-11 | 90 | 2 | 34'-9 | 72 | 2 | 28'-7 | 60 | 2 | 22'-5 | 47 | 5b3 |
| 5b4 | 22 VAR | 2 EACH 8'-7: 39'-6 | 552 | 18 VAR | 2 EACH 8'-7: 33'-4 | 393 | 14 VAR | 2 EACH 8'-7: 27'-2 | 261 | 10 VAR | 2 EACH 8'-7: 21'-0 | 154 | 5b4 |
| 5b5 | 42 VAR | 2 EACH 4'-10: 27'-3 | 703 | 34 VAR | 2 EACH 4'-10: 23'-3 | 498 | 26 VAR | 2 EACH 4'-11: 19'-3 | 328 | 18 VAR | 2 EACH 5'-1: 15'-3 | 191 | 5b5 |
| 4c1 | 76 VAR | 2 EACH 2'-9: 14'-9 | 444 | 64 VAR | 2 EACH 2'-9: 12'-10 | 333 | 52 VAR | 2 EACH 2'-9: 10'-11 | 237 | 40 VAR | 2 EACH 2'-9: 8'-11 | 156 | 4c1 |
| 4c2 | 4 | 13'-7 | 36 | 2 | 12'-0 | 16 | 2 | 10'-0 | 13 | 2 | 8'-0 | 11 | 4c2 |
| 4c3 | 4 | 1'-8 | 4 | 4 | 1'-8 | 4 | 4 | 1'-8 | 4 | 4 | 1'-8 | 4 | 4c3 |
| 4c4 | 100 VAR | 2 EACH 1'-11: 12'-10 | 493 | 84 VAR | 2 EACH 1'-11: 10'-10 | 358 | 68 VAR | 2 EACH 1'-10: 8'-9 | 240 | 52 VAR | 2 EACH 1'-10: 6'-9 | 149 | 4c4 |
| 5c5 | 12 VAR | 2 EACH 2'-9: 4'-5 | 45 | 12 VAR | 2 EACH 2'-9: 4'-5 | 45 | 12 VAR | 2 EACH 2'-9: 4'-5 | 45 | 12 VAR | 2 EACH 2'-9: 4'-5 | 45 | 5c5 |
| 5c6 | 64 VAR | 2 EACH 8'-9: 18'-9 | 918 | 52 VAR | 2 EACH 8'-9: 16'-10 | 694 | 40 VAR | 2 EACH 8'-9: 14'-11 | 494 | 28 VAR | 2 EACH 8'-9: 12'-11 | 316 | 5c6 |
| 5c7 | 50 | 10'-6 | 548 | 38 | 10'-6 | 416 | 26 | 10'-6 | 285 | — | — | — | 5c7 |
| 5c8 | 4 | 17'-6 | 73 | 2 | 16'-10 | 35 | 2 | 14'-11 | 31 | 2 | 12'-11 | 27 | 5c8 |
| | | | | | | | | | | | | | |
| 4d1 | 21 | 27'-6 | 386 | 21 | 23'-6 | 330 | 21 | 19'-6 | 274 | 21 | 15'-6 | 217 | 4d1 |
| 4d2 | 6 | 35'-8 | 143 | 6 | 29'-6 | 118 | 6 | 23'-5 | 94 | 6 | 17'-4 | 69 | 4d2 |
| | | | | | | | | | | | | | |
| 6f1 | 31 | 27'-6 | 1280 | 31 | 23'-6 | 1094 | 31 | 19'-6 | 908 | 31 | 15'-6 | 722 | 6f1 |
| 6f2 | 16 | 2 EACH 5'-10: 24'-10 | 368 | 14 VAR | 2 EACH 4'-6: 20'-10 | 266 | 10 VAR | 2 EACH 5'-10: 16'-10 | 170 | 8 VAR | 2 EACH 4'-6: 12'-10 | 104 | 6f2 |
| 6f3 | 2 | 40'-11 | 129 | 2 | 34'-9 | 104 | 2 | 28'-7 | 86 | 2 | 22'-5 | 67 | 6f3 |
| | | | | | | | | | | | | | |
| 4i1 | 67 | 6'-1 | 272 | 65 | 6'-1 | 264 | 65 | 6'-1 | 264 | 65 | 6'-1 | 264 | 4i1 |
| 7j1 | 4 | 33'-8 | 275 | 4 | 33'-0 | 270 | 4 | 33'-0 | 270 | 4 | 32'-8 | 267 | 7j1 |
| | | | | | | | | | | | | | |
| 6m1 | 34 VAR | 46'-3: 33'-10 | 2113 | 29 VAR | 44'-0: 33'-2 | 1725 | 23 VAR | 41'-5: 33'-2 | 1304 | 18 VAR | 39'-3: 32'-10 | 974 | 6m1 |
| 6m2 | 24 VAR | 45'-8: 34'-2 | 1483 | 20 VAR | 43'-0: 33'-6 | 1173 | 16 VAR | 35'-0: 27'-6 | 751 | 12 VAR | 32'-10: 27'-4 | 542 | 6m2 |
| | | | | | | | | | | | | | |
| 6p1 | 4 | 32'-3 | 194 | 4 | 31'-11 | 192 | 4 | 31'-11 | 192 | 4 | 31'-9 | 191 | 6p1 |
| 6p2 | 8 | 18'-7 | 223 | 8 | 16'-1 | 193 | 8 | 13'-7 | 163 | 8 | 11'-2 | 134 | 6p2 |
| | | | | | | | | | | | | | |
| 6s1 | 4 | 7'-8 | 46 | 4 | 7'-8 | 46 | 4 | 7'-8 | 46 | 4 | 7'-8 | 46 | 6s1 |
| 6s2 | 4 | 37'-6 | 225 | 4 | 31'-0 | 186 | 4 | 24'-6 | 147 | 4 | 18'-0 | 108 | 6s2 |
| 6s3 | 2 | 42'-9 | 134 | 2 | 36'-3 | 109 | 2 | 29'-9 | 89 | 2 | 23'-3 | 70 | 6s3 |
| 6s4 | 4 | 29'-10 | 179 | 4 | 25'-4 | 152 | 4 | 20'-10 | 125 | 4 | 16'-5 | 98 | 6s4 |
| | | | | | | | | | | | | | |
| 5t1 | 47 | 8'-0 | 392 | 43 | 7'-6 | 336 | 39 | 7'-0 | 285 | 35 | 6'-6 | 237 | 5t1 |

| ESTIMATED QUANTITIES ONE HEADWALL | | 12'-0 x 12'-0 | | 12'-0 x 10'-0 | | 12'-0 x 8'-0 | | 12'-0 x 6'-0 | | 10'-0 x 12'-0 | | 10'-0 x 10'-0 | | 10'-0 x 8'-0 | | 10'-0 x 6'-0 | |
|---|---|---|---|---|---|---|---|---|---|---|---|---|---|---|---|---|---|
| REINFORCING STEEL | | 13,014 LBS. | | 10,710 LBS. | | 8193 LBS. | | 6012 LBS. | | 12,153 LBS. | | 9714 LBS. | | 7366 LBS. | | 5333 LBS. | |
| CONCRETE | PARAPET Δ | 3.7 | 112.4 CU. YD. | 3.5 | 83.6 CU. YD. | 3.5 | 64.1 CU. YD. | 3.4 | 45.4 CU. YD. | 3.2 | 100.9 CU. YD. | 3.1 | 74.1 CU. YD. | 3.1 | 56.3 CU. YD. | 3.0 | 39.4 CU. YD. |
| | WINGWALLS | 34.0 | | 20.4 | | 13.7 | | 7.4 | | 34.0 | | 20.4 | | 13.7 | | 7.4 | |
| | FOOTING ΔΔ | 74.7 | | 59.7 | | 46.9 | | 34.6 | | 63.7 | | 50.6 | | 39.5 | | 29.0 | |

WEIGHT OF BARS OVER 40'-0 LONG INCLUDES AN ALLOWANCE FOR LAP ( 2'-8 FOR TOP APRON "6m" BARS AND 2'-2 ALL OTHER BARS ).
LENGTHS SHOWN FOR BARS OVER 40'-0 LONG DO NOT INCLUDE LAP ( 2'-8 FOR TOP APRON "m" BARS AND 2'-2 ALL OTHER ).

Δ NOTE: INCLUDES TOP OF WINGWALL QUANTITIES.

ΔΔ ASSUMES APRON AND FLOOR ARE EQUAL THICKNESS, ADJUST CONCRETE QUANTITIES FOR TRANSITION WHERE APRON AND FLOOR THICKNESS ARE NOT EQUAL.

## BENT BAR DETAILS

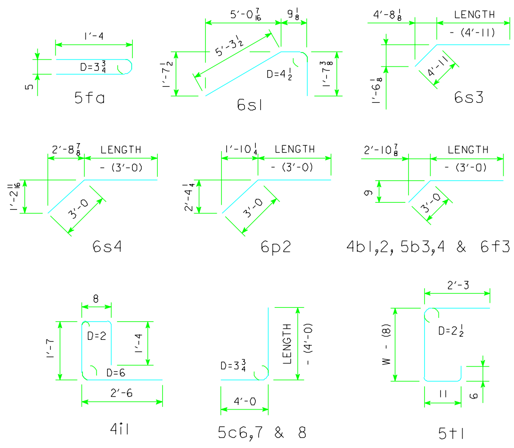


NOTE:
ALL DIMENSIONS ARE OUT TO OUT.
D = PIN DIAMETER.

VARIABLE LENGTH BARS DENOTED BY X:Y

## HEADWALL NOTES:

SEE SHEET TRRCB-GI-01 FOR GENERAL INFORMATION, SPECIFICATIONS, AND DESIGN STRESSES.

THIS HEADWALL IS BASED ON A 3:1 SLOPE NORMAL TO CENTERLINE OF ROADWAY.

THE SIDES OF THE FOOTING ARE TO BE FORMED TO INSURE CORRECT LINE AND GRADE.

ALL EXPOSED CORNERS OF 90° OR SHARPER ARE TO BE FILLETED WITH A ¾" DRESSED AND BEVELED STRIP.

ALL REINFORCING IS TO BE SECURELY WIRED IN PLACE BEFORE THE CONCRETE IS POURED. ALL SLAB AND FLOOR REINFORCING STEEL IS TO BE SUPPORTED BY BAR CHAIRS AT INTERVALS OF NOT MORE THAN 3'-0 IN EITHER DIRECTION AS OUTLINED IN THE STANDARD SPECIFICATIONS.

CLEAR DISTANCE FROM FACE OF CONCRETE TO NEAR REINFORCING BAR IS TO BE 2" UNLESS OTHERWISE NOTED OR SHOWN.

CONCRETE QUANTITIES ARE ESTIMATED FROM BACK OF PARAPET.

HORIZONTAL TAILS OF BARS "b" & "s" ESTIMATED TO EXTEND 2'-0 BEYOND BACK OF PARAPET (INTO END OF BARREL). LONGITUDINAL BARS "d", "6f1", AND "6f3" ESTIMATED TO PROJECT INTO END SECTION OF BARREL A MINIMUM OF 2'-0 BEYOND BACK OF PARAPET.

THE "LENGTH" COLUMN REFLECTS TOTAL NUMBER OF FEET NECESSARY TO MEET THESE REQUIREMENTS.

LATEST REVISION DATE :

APPROVED BY :

STANDARD DESIGN

# FLARED WING HEADWALLS

FOR

TRIPLE REINFORCED CONCRETE BOX CULVERTS

IOWA DEPARTMENT OF TRANSPORTATION - HIGHWAY DIVISION

SEPT., 2001

TRH 0-5-01

REVISED 06-02 - 4i1 BARS NUMBER CHANGED.
TRH05.S01 - 09-01 THIS SHEET ISSUED.

XXXXXXXXXXSYSTEMTIME XXXXXXXUSERNAME XXXXXXXXXXXXXXXXXXXXXXXXXXXXXXXXXXXXXXXXXXXXXXXXXXXXXXXXXXXXXDGNSPEC