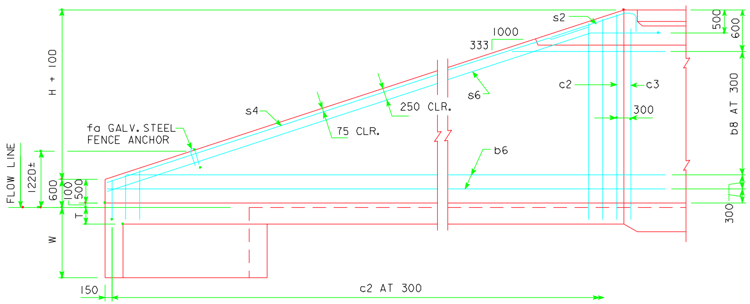

TYPICAL VIEW - FRONT FACE REINFORCING SHORT WINGWALL

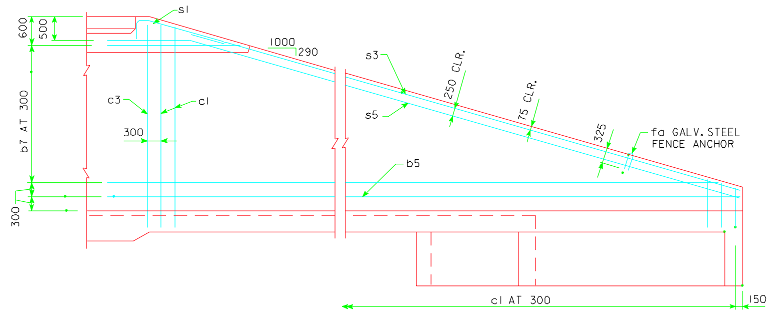

TYPICAL VIEW - FRONT FACE REINFORCING LONG WINGWALL

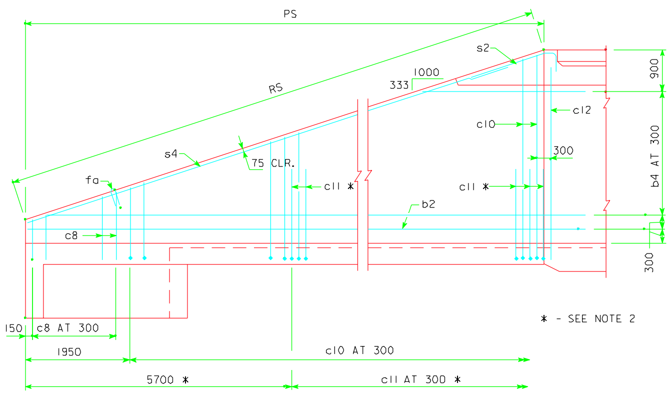

TYPICAL VIEW - BACK FACE REINFORCING SHORT WINGWALL

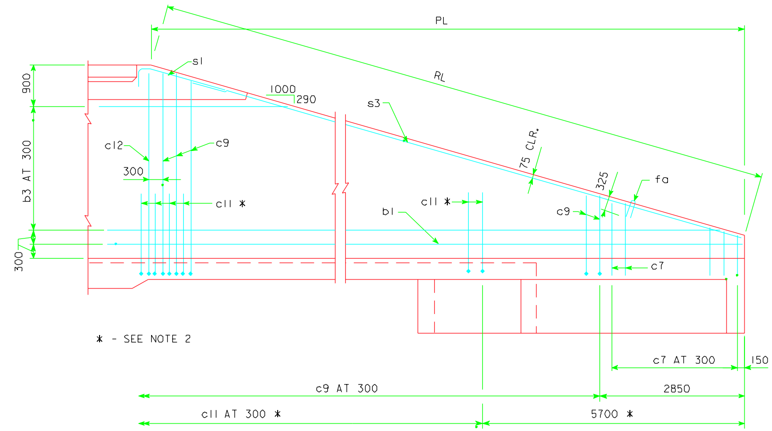

TYPICAL VIEW - BACK FACE REINFORCING LONG WINGWALL

CULVERT HEIGHT (H)	SLOPE Y
1800	387
2400	410
3000	425
3600	435

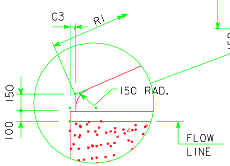

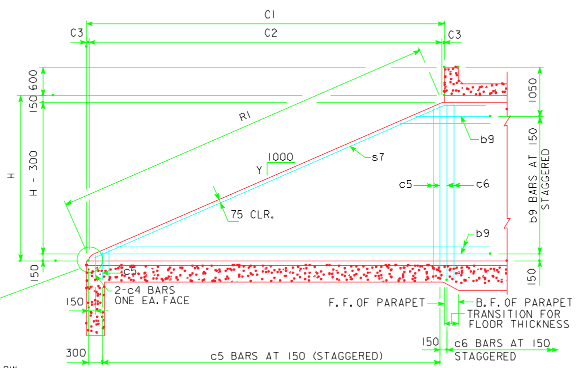

TYPICAL VIEW - INTERIOR WALL

NOTES:
1. BAR SPACINGS AND POSITIONS SHOWN ARE SIMILAR FOR ALL SIZES OF HEADWALLS IN THIS STANDARD.
2. NOT APPLICABLE TO HEADWALL HEIGHT OF H=1800 mm.
3. FOR DIMENSION TABLE SEE SHEET MTRH 15-1-94.

LATEST REVISION DATE : 04-02

APPROVED BY :

STANDARD DESIGN

FLARED WING HEADWALLS

FOR

TRIPLE REINFORCED CONCRETE BOX CULVERTS

PROJECT DEVELOPMENT DIVISION
IOWA DEPARTMENT OF TRANSPORTATION

DECEMBER, 1994

MTRH 15-4-94

REVISED 04-02 - CHANGED BAR CLEARANCES.
TRHI54M.S01 : THIS SHEET ISSUED 03/95

XXXXXXXXXXSYSTEMTIME XXXXXXXUSERNAME XXXXXXXXXXXXXXXXXXXXXXXXXXXXXXXXXXXXXXXXXXXXXXXXXXXXXXXXXXDGNSPEC