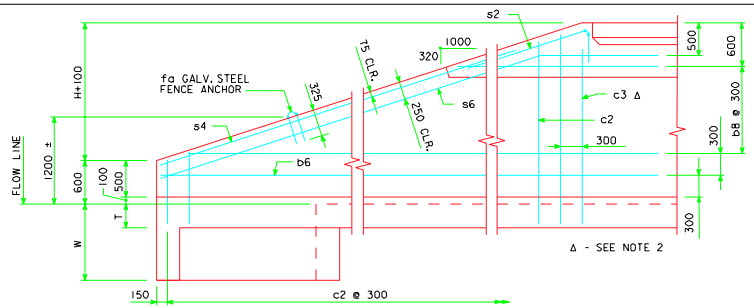

TYPICAL VIEW - FRONT FACE REINFORCING SHORT WINGWALL

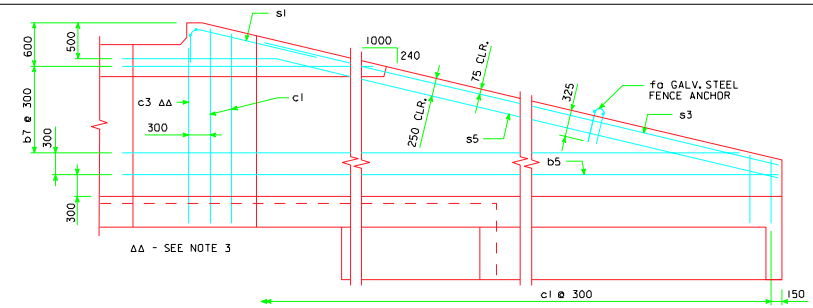

TYPICAL VIEW - FRONT FACE REINFORCING LONG WINGWALL

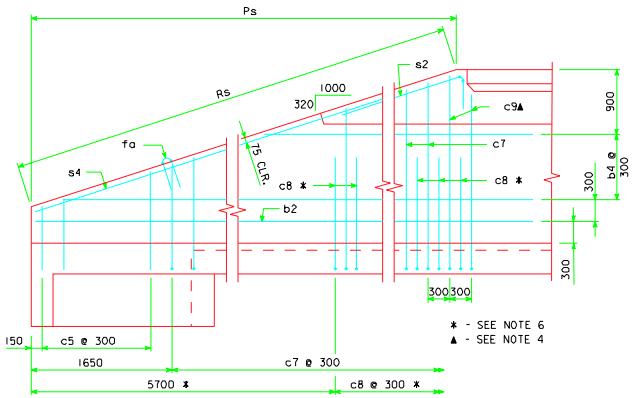

TYPICAL VIEW - BACK FACE REINFORCING SHORT WINGWALL

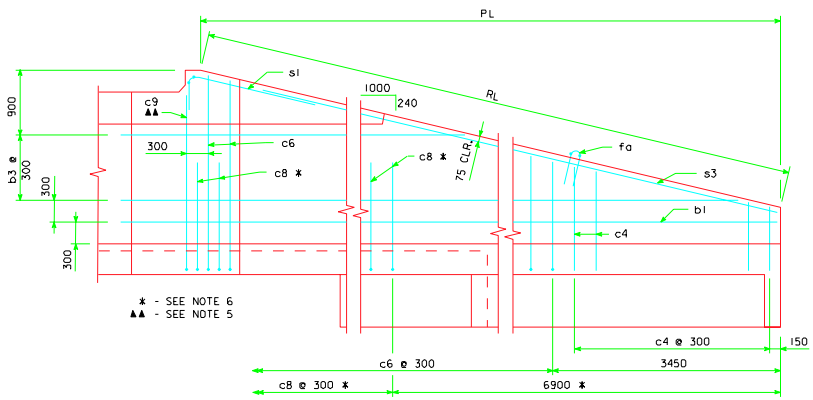

TYPICAL VIEW - BACK FACE REINFORCING LONG WINGWALL

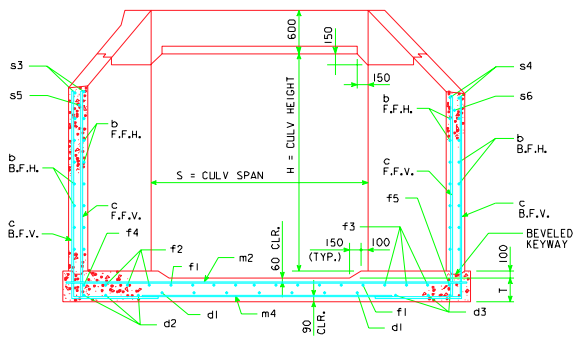

TYPICAL SECTION - NEAR CENTER OF APRON

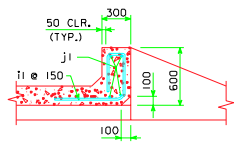

SECTION THRU PARAPET

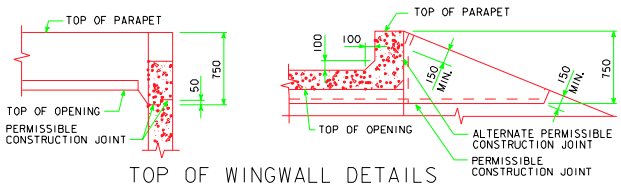

TOP OF WINGWALL DETAILS

NOTES:

1. BAR SPACINGS AND POSITIONS SHOWN ARE SIMILAR FOR ALL SIZES OF HEADWALLS IN THIS STANDARD.
2. ONE c3 BAR, HEADWALL HEIGHTS OF 1200, 1500 & 2400
   TWO c3 BARS, HEADWALL HEIGHTS OF 900, 1800, 3000 & 3600.
3. ONE c3 BAR, HEADWALL HEIGHTS OF 900, 1200, 1800 & 2400.
   TWO c3 BARS, HEADWALL HEIGHTS OF 1500, 3000, & 3600.
4. ONE c9 BAR, HEADWALL HEIGHTS OF 1200, 1500, & 2400.
   TWO c9 BARS, HEADWALL HEIGHTS OF 900, 1800, 3000 & 3600.
5. ONE c9 BAR, HEADWALL HEIGHTS OF 900, 1200, 1800 & 2400.
   TWO c9 BARS, HEADWALL HEIGHTS OF 1500, 3000 & 3600.
6. NOT APPLICABLE TO HEADWALL HEIGHTS OF 900, 1200, 1500 & 1800.
7. FOR DIMENSION TABLE SEE SHEET FWH 30-6-95.

LATEST REVISION DATE : 1-98

APPROVED BY : Clifton A. Goodquest

STANDARD DESIGN

FLARED WING HEADWALLS

FOR
REINFORCED CONCRETE BOX CULVERTS

PROJECT DEVELOPMENT DIVISION
IOWA DEPARTMENT OF TRANSPORTATION

JULY, 1995

MFWH 30-8-95

REVISED 1/98; CLEAR DISTANCE TO 1i BAR CHANGED.
FWHSDWL.S01

REVISED : 12/96 ; KEYWAY NOTATION CHANGED.

XXXXXXXXXXSYSTEMTIME XXXXXXXXUSERNAME XXXXXXXXXX