BILL OF REINFORCING FOR ONE HEADWALL 15° SKEW CULVERT SPAN X CULVERT HEIGHT

LOCATION ΔΔ	SHAPE	SIZE	MARK	3000x3600 NO.	3000x3600 LENGTH	3000x3600 MASS	3000x3000 NO.	3000x3000 LENGTH	3000x3000 MASS	3000x2400 NO.	3000x2400 LENGTH	3000x2400 MASS	3000x1800 NO.	3000x1800 LENGTH	3000x1800 MASS	3000x1500 NO.	3000x1500 LENGTH	3000x1500 MASS	3000x1200 NO.	3000x1200 LENGTH	3000x1200 MASS	MARK
FENCE ANCHOR		15	fa	2	930	3	2	930	3	2	930	3	2	930	3	2	930	3	2	930	3	fa
WINGWALL, BFH L		15	b1	1	13 550	21	1	11 490	18	1	9430	15	1	7370	12	1	6340	10	1	5310	8	b1
WINGWALL, BFH S		15	b2	1	11 950	19	1	10 150	16	1	8350	13	1	6550	10	1	5650	9	1	4750	7	b2
WINGWALL BFH L		15	b3	10 (LENGTH VARIES)	3720 TO 12 990	132	8 (LENGTH VARIES)	3720 TO 10 930	92	6 (LENGTH VARIES)	3720 TO 8870	59	4 (LENGTH VARIES)	3720 TO 6810	38	3 (LENGTH VARIES)	3720 TO 5780	22	2 (LENGTH VARIES)	3720 TO 4750	13	b3
WINGWALL BFH S		15	b4	10 (LENGTH VARIES)	3360 TO 11 470	116	8 (LENGTH VARIES)	3360 TO 9670	82	6 (LENGTH VARIES)	3360 TO 7870	53	4 (LENGTH VARIES)	3360 TO 6070	30	3 (LENGTH VARIES)	3360 TO 5170	20	2 (LENGTH VARIES)	3360 TO 4270	12	b4
WINGWALL FFH L		15	b5	1	13 550	21	1	11 490	18	1	9430	15	1	7370	12	1	6340	10	1	5310	8	b5
WINGWALL FFH S		15	b6	1	11 950	19	1	10 150	16	1	8350	13	1	6550	10	1	5650	9	1	4750	7	b6
WINGWALL FFH L		15	b7	11 (LENGTH VARIES)	2690 TO 12 990	135	9 (LENGTH VARIES)	2690 TO 10 930	96	7 (LENGTH VARIES)	2690 TO 8870	64	5 (LENGTH VARIES)	2690 TO 6810	37	4 (LENGTH VARIES)	2690 TO 5780	27	3 (LENGTH VARIES)	2690 TO 4750	18	b7
WINGWALL FFH S		15	b8	11 (LENGTH VARIES)	2460 TO 11 470	120	9 (LENGTH VARIES)	2460 TO 9670	86	7 (LENGTH VARIES)	2460 TO 7870	57	5 (LENGTH VARIES)	2460 TO 6070	38	4 (LENGTH VARIES)	2460 TO 5170	24	3 (LENGTH VARIES)	2460 TO 4270	16	b8
WINGWALL FFV L		15	c1	42 (LENGTH VARIES)	820 TO 4410	172	35 (LENGTH VARIES)	820 TO 3790	127	29 (LENGTH VARIES)	820 TO 3270	93	22 (LENGTH VARIES)	820 TO 2660	60	18 (LENGTH VARIES)	820 TO 2310	44	15 (LENGTH VARIES)	820 TO 2050	34	c1
WINGWALL FFV S		15	c2	37 (LENGTH VARIES)	830 TO 4430	153	31 (LENGTH VARIES)	830 TO 3830	113	25 (LENGTH VARIES)	830 TO 3230	80	19 (LENGTH VARIES)	830 TO 2630	52	16 (LENGTH VARIES)	830 TO 2330	40	13 (LENGTH VARIES)	830 TO 2030	29	c2
WINGWALL FFV L		15	c3	2	4350	14	2	3750	12	2	3150	10	2	2550	8	2	2250	7	2	1950	6	c3
WINGWALL FFV S		15	c3	1	4350	7	1	3750	6	1	3150	5	1	2550	4	1	2250	4	1	1950	3	c3
WINGWALL BFV L		15	c4	9 (LENGTH VARIES)	820 TO 1520	17	9 (LENGTH VARIES)	820 TO 1520	17	9 (LENGTH VARIES)	820 TO 1520	17	9 (LENGTH VARIES)	820 TO 1520	17	9 (LENGTH VARIES)	820 TO 1520	17	9 (LENGTH VARIES)	820 TO 1520	17	c4
WINGWALL BFV S		15	c5	6 (LENGTH VARIES)	830 TO 1330	10	6 (LENGTH VARIES)	830 TO 1330	10	6 (LENGTH VARIES)	830 TO 1330	10	6 (LENGTH VARIES)	830 TO 1330	10	6 (LENGTH VARIES)	830 TO 1330	10	6 (LENGTH VARIES)	830 TO 1330	10	c5
WINGWALL BFV L		15	c6	38 (LENGTH VARIES)	2810 TO 5610	218	26 (LENGTH VARIES)	2810 TO 4990	159	20 (LENGTH VARIES)	2810 TO 4470	114	13 (LENGTH VARIES)	2810 TO 3860	68	9 (LENGTH VARIES)	2810 TO 3510	45	6 (LENGTH VARIES)	2810 TO 3250	29	c6
WINGWALL BFV S		15	c7	31 (LENGTH VARIES)	2630 TO 5630	201	25 (LENGTH VARIES)	2630 TO 5030	150	19 (LENGTH VARIES)	2630 TO 4430	105	13 (LENGTH VARIES)	2630 TO 3830	66	10 (LENGTH VARIES)	2630 TO 3530	48	7 (LENGTH VARIES)	2630 TO 3230	32	c7
WINGWALL BFV L		15	c8	24	3200	119	17	3200	84	10	3200	49	-----	-----	0	-----	-----	0	-----	-----	0	c8
WINGWALL BFV S		15	c8	19	3200	94	13	3200	64	7	3200	35	-----	-----	0	-----	-----	0	-----	-----	0	c8
WINGWALL BFV L		15	c9	2	5550	17	2	4950	16	2	4350	14	2	3750	12	2	3450	11	2	3150	10	c9
WINGWALL BFV S		15	c9	1	5550	9	1	4950	8	1	4350	7	1	3750	6	1	3450	5	1	3150	5	c9
APRON, LONG BOT		15	d1	7	8540	94	7	7200	80	7	6060	67	7	4810	58	7	4190	46	7	3570	39	d1
APRON, LONG BOT L		15	d2	3	12 060	57	3	10 020	47	3	7980	38	3	5950	28	3	4950	23	3	3950	19	d2
APRON, LONG BOT S		15	d3	3	10 580	50	3	8790	41	3	7010	33	3	5240	25	3	4370	21	3	3500	16	d3
APRON, LONG TOP		20	f1	10	8540	201	10	7300	172	10	6060	143	10	4810	113	10	4190	99	10	3570	84	f1
APRON, LONG TOP L		20	f2	10 (LENGTH VARIES)	490 TO 7310	92	8 (LENGTH VARIES)	750 TO 6070	64	7 (LENGTH VARIES)	240 TO 4830	42	5 (LENGTH VARIES)	510 TO 3580	24	4 (LENGTH VARIES)	640 TO 2960	17	3 (LENGTH VARIES)	770 TO 2330	11	f2
APRON, LONG TOP S		20	f3	9 (LENGTH VARIES)	340 TO 7290	81	7 (LENGTH VARIES)	820 TO 6050	57	6 (LENGTH VARIES)	420 TO 4800	37	4 (LENGTH VARIES)	910 TO 3550	21	4 (LENGTH VARIES)	270 TO 2930	15	3 (LENGTH VARIES)	510 TO 2800	10	f3
APRON, LONG TOP L		20	f4	1	13 550	32	1	11 490	27	1	9430	22	1	7370	17	1	6340	15	1	5310	13	f4
APRON, LONG TOP S		20	f5	1	11 950	28	1	10 150	24	1	8350	20	1	6550	15	1	5650	13	1	4750	11	f5
PARAPET, VERT		15	i1	21	1880	62	21	1880	62	21	1880	62	21	1880	62	21	1880	62	21	1880	62	i1
PARAPET, HORIZ		25	j1	4	3630	57	4	3530	55	4	3530	55	4	3480	55	4	3480	55	4	3480	55	j1
APRON, TRANS TOP		20	m1	3 (LENGTH VARIES)	3570 TO 3680	26	3 (LENGTH VARIES)	3460 TO 3570	25	3 (LENGTH VARIES)	3460 TO 3570	25	3 (LENGTH VARIES)	3410 TO 3520	24	3 (LENGTH VARIES)	3410 TO 3520	24	3 (LENGTH VARIES)	3410 TO 3520	24	m1
APRON, TRANS TOP		20	m2	30 (LENGTH VARIES)	3750 TO 6940	378	24 (LENGTH VARIES)	3650 TO 6180	278	19 (LENGTH VARIES)	3650 TO 5630	208	13 (LENGTH VARIES)	3600 TO 4920	130	10 (LENGTH VARIES)	3600 TO 4590	96	8 (LENGTH VARIES)	3600 TO 4870	75	m2
APRON, TRANS TOP		20	m3	3	5000	35	3	4650	33	3	4290	30	3	3990	28	3	3810	27	3	3630	26	m3
APRON, TRANS BOT		20	m4	25 (LENGTH VARIES)	1630 TO 5510	210	21 (LENGTH VARIES)	1630 TO 4860	160	17 (LENGTH VARIES)	1630 TO 4220	117	13 (LENGTH VARIES)	1630 TO 3570	80	11 (LENGTH VARIES)	1630 TO 3250	69	9 (LENGTH VARIES)	1630 TO 2920	48	m4
CURTAIN, HORIZ		20	p1	4	3080	29	4	3080	29	4	3080	29	4	3080	29	4	3080	29	4	3080	29	p1
CURTAIN, HORIZ L		20	p2	4	6560	62	4	5650	53	4	4750	45	4	3840	36	4	3390	32	4	2940	28	p2
CURTAIN, HORIZ S		20	p3	4	5060	48	4	4390	41	4	3730	35	4	3060	29	4	2730	26	4	2390	23	p3
WING SLOPE EF L		20	s1	2	2580	12	2	2580	12	2	2580	12	2	2580	12	2	2580	12	2	2580	12	s1
WING SLOPE EF S		20	s2	2	2430	11	2	2430	11	2	2430	11	2	2430	11	2	2430	11	2	2430	11	s2
WING SLOPE EF L		20	s3	2	12 240	58	2	10 090	48	2	7950	37	2	5800	27	2	4730	22	2	3660	17	s3
WING SLOPE EF S		20	s4	2	10 930	51	2	9030	43	2	7130	34	2	5210	25	2	4290	20	2	3340	16	s4
WING SLOPE FF L		20	s5	1	14 050	33	1	11 930	28	1	9780	23	1	7640	18	1	6540	15	1	5490	13	s5
WING SLOPE FF S		20	s6	1	12 540	31	1	10 640	25	1	8750	21	1	6850	16	1	5900	14	1	4950	12	s6
CURTAIN, VERT		15	t1	32	2410	121	27	2260	96	23	2110	76	19	1960	58	16	1960	49	15	1960	46	t1
ESTIMATED QUANTITIES ONE HEADWALL	REINF STEEL				3476 kg			2704 kg			2053 kg			1419 kg			1171 kg			967 kg		
	CONC	PARAPET	1.2		46.0 m³		1.1	32.6 m³		1.1	23.9 m³		1.0	15.9 m³		1.0	13.0 m³		1.0	10.4 m³		
		WINGS	17.1				10.4			7.1			3.9			2.9			2.0			
		FOOTING	27.7				21.1			15.7			11.0			9.1			7.4			

NOTES: Δ INCLUDES TOP OF WINGWALL QUANTITIES.

ΔΔ SUBSCRIPT L DENOTES LONG WING.
SUBSCRIPT S DENOTES SHORT WING.

BENT BAR DETAILS

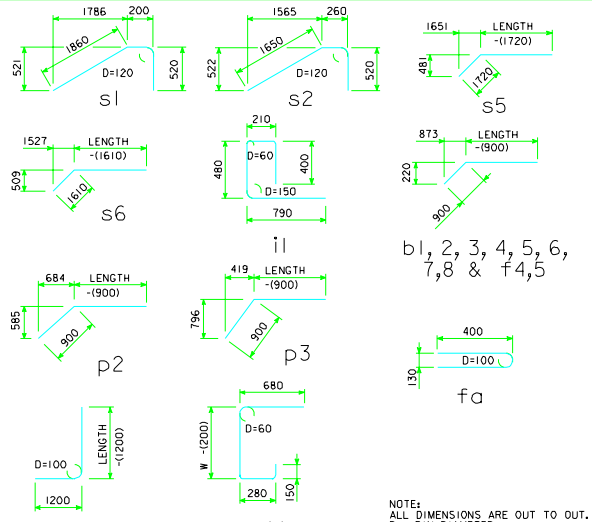

NOTE:
ALL DIMENSIONS ARE OUT TO OUT.
D = PIN DIAMETER.

HEADWALL NOTES:

THIS HEADWALL IS BASED ON A 3:1 SLOPE NORMAL TO CENTERLINE OF ROADWAY.

THE SIDES OF THE FOOTING ARE TO BE FORMED TO INSURE CORRECT LINE AND GRADE.

ALL EXPOSED CORNERS OF 90° OR SHARPER ARE TO BE FILLETED WITH A 20 mm DRESSED AND BEVELED STRIP.

ALL REINFORCING IS TO BE SECURELY WIRED IN PLACE BEFORE THE CONCRETE IS POURED. ALL SLAB AND FLOOR REINFORCING STEEL IS TO BE SUPPORTED BY BAR CHAIRS AT INTERVALS OF NOT MORE THAN 900 mm IN EITHER DIRECTION AS OUTLINED IN THE STANDARD SPECIFICATIONS.

CLEAR DISTANCE FROM FACE OF CONCRETE TO NEAR REINFORCING BAR IS TO BE 50 mm UNLESS OTHERWISE NOTED OR SHOWN. CLEARANCE TO THE BOTTOM ENDS OF VERTICAL BARS SHALL BE 75 mm.

CONCRETE QUANTITIES ARE ESTIMATED FROM BACK OF PARAPET.

HORIZONTAL TAILS OF BARS "b" & "s" ESTIMATED TO EXTEND 600 mm BEYOND BACK OF PARAPET (INTO END OF BARREL). LONGITUDINAL BARS "d", "f1", "f4" AND "f5" ESTIMATED TO PROJECT INTO END SECTION OF BARREL A MINIMUM OF 600 mm BEYOND BACK OF PARAPET.

THE "LENGTH" COLUMN REFLECTS TOTAL NUMBER OF MILLIMETERS NECESSARY TO MEET CLEARANCE REQUIREMENTS. "MASS" COLUMN INCLUDES AN ALLOWANCE OF 650 mm FOR LAP ON BARS THAT ARE OVER 12 000 mm LONG.

ALL DIMENSIONS ARE IN MILLIMETERS (mm) UNLESS OTHERWISE NOTED OR SHOWN.

NOTES:

1. SEE SHEET MRCB-G1-95 FOR GENERAL INFORMATION, SPECIFICATIONS, AND DESIGN STRESSES.

LATEST REVISION DATE : 04-02

APPROVED BY : Lorne A. Kompart

STANDARD DESIGN

FLARED WING HEADWALLS

FOR
REINFORCED CONCRETE BOX CULVERTS

PROJECT DEVELOPMENT DIVISION
IOWA DEPARTMENT OF TRANSPORTATION

JULY, 1995

MFWH 15-2-95

REVISED 04-02 - CONCRETE QUANTITIES ADJUSTED.
FWH15-2M.SOI

REVISED 1/98; BEND DIMENSIONS OF i1 BAR CHANGED.

XXXXXXXXXXSYSTEMTIME XXXXXXXXUSERNAME XXDGNSPEC