BILL OF REINFORCING FOR ONE HEADWALL 0° SKEW CULVERT SPAN X CULVERT HEIGHT

LOCATION	SHAPE	SIZE	MARK	1500×1800 NO.	1500×1800 LENGTH	1500×1800 MASS	1500×1500 NO.	1500×1500 LENGTH	1500×1500 MASS	1500×1200 NO.	1500×1200 LENGTH	1500×1200 MASS	1500×900 NO.	1500×900 LENGTH	1500×900 MASS	1200×1200 No.	1200×1200 LENGTH	1200×1200 MASS	900×900 No.	900×900 LENGTH	900×900 MASS	MARK
FENCE ANCHOR		15	fa	2	930	3	2	930	3	2	930	3	2	930	3	2	930	3	2	930	3	fa
WINGWALL, BFH		15	b1	2	6730	21	2	5800	18	2	4870	15	2	3940	12	2	4870	15	2	3940	12	b1
WINGWALL BFH		15	b2	8 (LENGTH VARIES)	2 EA 3440 TO 6220	61	6 (LENGTH VARIES)	2 EA 3440 TO 5290	41	4 (LENGTH VARIES)	2 EA 3440 TO 4370	25	2	3440	11	4 (LENGTH VARIES)	2 EA 3440 TO 4370	25	2	3440	11	b2
WINGWALL FFH		15	b3	2	6730	21	2	5800	18	2	4870	15	2	3940	12	2	4870	15	2	3940	12	b3
WINGWALL FFH		15	b4	10 (LENGTH VARIES)	2 EA 2510 TO 6220	69	8 (LENGTH VARIES)	2 EA 2510 TO 5290	49	6 (LENGTH VARIES)	2 EA 2510 TO 4370	32	4 (LENGTH VARIES)	2 EA 2510 TO 3440	19	6 (LENGTH VARIES)	2 EA 2510 TO 4370	32	4 (LENGTH VARIES)	2 EA 2510 TO 3440	19	b4
WINGWALL FFV		15	c1	40 (LENGTH VARIES)	2 EA 770 TO 2620	106	32 (LENGTH VARIES)	2 EA 770 TO 2230	75	26 (LENGTH VARIES)	2 EA 770 TO 1940	55	20 (LENGTH VARIES)	2 EA 770 TO 1650	38	26 (LENGTH VARIES)	2 EA 770 TO 1940	55	20 (LENGTH VARIES)	2 EA 770 TO 1650	38	c1
WINGWALL FFV		15	c2	2	2500	8	4	2200	14	4	1900	12	4	1600	10	4	1900	12	4	1600	10	c2
WINGWALL BFV		15	c3	12 (LENGTH VARIES)	2 EA 780 TO 1260	19	12 (LENGTH VARIES)	2 EA 780 TO 1260	19	12 (LENGTH VARIES)	2 EA 780 TO 1260	19	12 (LENGTH VARIES)	2 EA 780 TO 1260	19	12 (LENGTH VARIES)	2 EA 780 TO 1260	19	12 (LENGTH VARIES)	2 EA 780 TO 1260	19	c3
WINGWALL BFV		15	c4	28 (LENGTH VARIES)	2 EA 2560 TO 3820	140	20 (LENGTH VARIES)	2 EA 2560 TO 3430	94	14 (LENGTH VARIES)	2 EA 2560 TO 3140	63	8 (LENGTH VARIES)	2 EA 2560 TO 2850	34	14 (LENGTH VARIES)	2 EA 2560 TO 3140	63	8 (LENGTH VARIES)	2 EA 2560 TO 2850	34	c4
WINGWALL BFV		15	c5	--	--	0	--	--	0	--	--	0	--	--	0	--	--	0	--	--	0	c5
WINGWALL BFV		15	c6	2	3700	12	4	3400	21	4	3100	19	4	2800	18	4	3100	19	4	2800	18	c6
APRON, LONG BOT		15	d1	3	4650	22	3	4050	19	3	3450	16	3	2850	13	3	3450	16	3	2850	13	d1
APRON, LONG BOT		15	d2	6	5340	50	6	4440	42	6	3560	34	6	3470	33	6	3560	34	6	3470	33	d2
APRON, LONG TOP		20	f1	5	4650	55	5	4050	48	5	3450	41	5	2850	34	4	3450	32	3	2850	20	f1
APRON, LONG TOP		20	f2	8 (LENGTH VARIES)	2 EA 950 TO 3430	41	8 (LENGTH VARIES)	2 EA 340 TO 2830	30	6 (LENGTH VARIES)	2 EA 550 TO 2220	20	4 (LENGTH VARIES)	2 EA 770 TO 1620	11	6 (LENGTH VARIES)	2 EA 550 TO 2220	20	4 (LENGTH VARIES)	2 EA 770 TO 1620	11	f2
APRON, LONG TOP		20	f3	2	6730	32	2	5800	27	2	4870	23	2	3940	19	2	4870	23	2	3940	19	f3
PARAPET, VERT		15	i1	11	1850	32	11	1850	32	11	1850	32	11	1850	32	9	1850	26	7	1850	20	i1
PARAPET, HORIZ		25	j1	4	1860	29	4	1860	29	4	1860	29	4	1860	29	4	1560	24	4	1260	20	j1
APRON, TRANS TOP		20	m1	18 (LENGTH VARIES)	1770 TO 3560	113	15 (LENGTH VARIES)	1770 TO 3240	88	12 (LENGTH VARIES)	1770 TO 2930	66	9 (LENGTH VARIES)	1770 TO 2610	46	12 (LENGTH VARIES)	1470 TO 2630	58	9 (LENGTH VARIES)	1170 TO 2010	34	m1
APRON, TRANS BOT		20	m2	9 (LENGTH VARIES)	690 TO 1890	28	7 (LENGTH VARIES)	690 TO 1590	19	5 (LENGTH VARIES)	690 TO 1290	12	3 (LENGTH VARIES)	690 TO 990	6	3 (LENGTH VARIES)	690 TO 990	6	1	1650	4	m2
CURTAIN, HORIZ		20	p1	4	1480	14	4	1480	14	4	1480	14	4	1480	14	4	1180	11	4	880	8	p1
CURTAIN, HORIZ		20	p2	8	3330	63	8	2980	56	8	2600	49	8	2210	42	8	2600	49	8	2210	42	p2
WING SLOPE EF		20	s1	4	2460	23	4	2460	23	4	2460	23	4	2460	23	4	2460	23	4	2460	23	s1
WING SLOPE EF		20	s2	4	5350	50	4	4870	41	4	3400	32	4	2420	23	4	3400	32	4	2420	23	s2
WING SLOPE FF		20	s3	2	6990	33	2	6020	28	2	5040	24	2	4070	19	2	5040	24	2	4070	19	s3
CURTAIN, VERT		15	t1	15	1960	46	13	1960	40	11	1960	34	9	1960	28	9	1960	28	7	1960	22	t1
	REINF	STEEL			1091 kg			888 kg			707 kg			548 kg			664 kg			487 kg		
ESTIMATED QUANTITIES ONE HEADWALL	CONC	PARAPET Δ		0.7	11.9 m³		0.7	9.5 m³		0.7	7.5 m³		0.7	5.6 m³		0.7	7.1 m³		0.6	4.9 m³		
		WINGS		8.8			2.8			1.9			1.2			1.9			1.2			
		FOOTING		7.4			6.0			4.9			3.7			4.5			3.1			

Δ NOTE:

INCLUDES TOP OF WINGWALL QUANTITIES.

NOTES:

1. SEE SHEET MRCB-G1-95 FOR GENERAL INFORMATION, SPECIFICATIONS, AND DESIGN STRESSES.

BENT BAR DETAILS

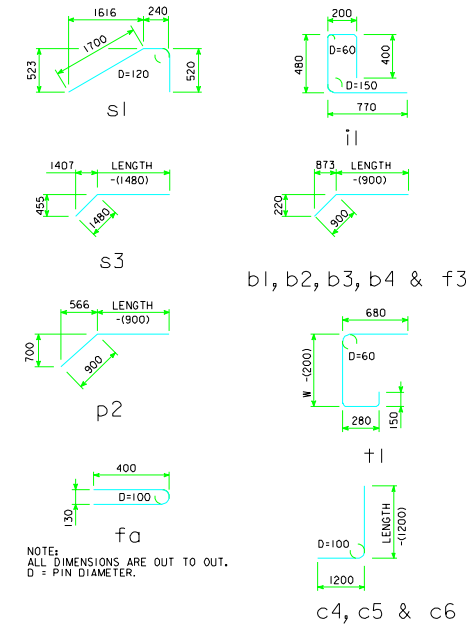

NOTE:
ALL DIMENSIONS ARE OUT TO OUT.
D = PIN DIAMETER.

HEADWALL NOTES:

THIS HEADWALL IS BASED ON A 3:1 SLOPE NORMAL TO CENTERLINE OF ROADWAY.

THE SIDES OF THE FOOTING ARE TO BE FORMED TO INSURE CORRECT LINE AND GRADE.

ALL EXPOSED CORNERS OF 90° OR SHARPER ARE TO BE FILLETED WITH A 20 mm DRESSED AND BEVELED STRIP.

ALL REINFORCING IS TO BE SECURELY WIRED IN PLACE BEFORE THE CONCRETE IS POURED. ALL SLAB AND FLOOR REINFORCING STEEL IS TO BE SUPPORTED BY BAR CHAIRS AT INTERVALS OF NOT MORE THAN 900 mm IN EITHER DIRECTION AS OUTLINED IN THE STANDARD SPECIFICATIONS.

CLEAR DISTANCE FROM FACE OF CONCRETE TO NEAR REINFORCING BAR IS TO BE 50 mm UNLESS OTHERWISE NOTED OR SHOWN. CLEARANCE TO THE BOTTOM ENDS OF VERTICAL BARS SHALL BE 75 mm.

CONCRETE QUANTITIES ARE ESTIMATED FROM BACK OF PARAPET.

HORIZONTAL TAILS OF BARS "b" & "s" ESTIMATED TO EXTEND 600 mm BEYOND BACK OF PARAPET (INTO END OF BARREL). LONGITUDINAL BARS "d", "6f1", AND "6f3" ESTIMATED TO PROJECT INTO END SECTION OF BARREL A MINIMUM OF 600 mm BEYOND BACK OF PARAPET.

THE "LENGTH" COLUMN REFLECTS TOTAL NUMBER OF MILLIMETERS NECESSARY TO MEET CLEARANCE REQUIREMENTS. "MASS" COLUMN INCLUDES AN ALLOWANCE OF 650 mm FOR LAP ON BARS THAT ARE OVER 12 000 mm LONG.

ALL DIMENSIONS ARE IN MILLIMETERS (mm) UNLESS OTHERWISE NOTED OR SHOWN.

LATEST REVISION DATE : 04-02

APPROVED BY : William A. Kneppmann

STANDARD DESIGN

FLARED WING HEADWALLS

FOR
REINFORCED CONCRETE BOX CULVERTS

PROJECT DEVELOPMENT DIVISION
IOWA DEPARTMENT OF TRANSPORTATION

JULY, 1995

MFWH 0-3-95

REVISED 1/98; BEND DIMENSIONS OF d1 BARS FOR 1500 SPANS. CONCRETE QUANTITIES ADJUSTED.

REVISED 04-02 - CHANGED THE NUMBER OF d1 BARS FOR 1500 SPANS.

FWHO3M.S01

XXXXXXXXXXSYSTEMTIME XXXXXXXUSERNAME XXXXXXXXXX