BILL OF REINFORCING FOR ONE HEADWALL 0° SKEW CULVERT SPAN X CULVERT HEIGHT

LOCATION	SHAPE	SIZE	MARK	3600×3600 NO.	3600×3600 LENGTH	3600×3600 MASS	3600×3000 NO.	3600×3000 LENGTH	3600×3000 MASS	3600×2400 NO.	3600×2400 LENGTH	3600×2400 MASS	3600×1800 NO.	3600×1800 LENGTH	3600×1800 MASS	3000×3600 NO.	3000×3600 LENGTH	3000×3600 MASS	3000×3000 NO.	3000×3000 LENGTH	3000×3000 MASS	3000×2400 NO.	3000×2400 LENGTH	3000×2400 MASS	3000×1800 NO.	3000×1800 LENGTH	3000×1800 MASS	3000×1500 NO.	3000×1500 LENGTH	3000×1500 MASS	3000×1200 NO.	3000×1200 LENGTH	3000×1200 MASS	MARK
FENCE ANCHOR		15	fa	2	930	3	2	930	3	2	930	3	2	930	3	2	930	3	2	930	3	2	930	3	2	930	3	2	930	3	2	930	3	fa
WINGWALL, BFH		15	b1	2	12 290	39	2	10 440	33	2	8580	27	2	6730	21	2	12 290	39	2	10 440	33	2	8580	27	2	6730	21	2	5800	18	2	4870	15	b1
WINGWALL BFH		15	b2	20 (LENGTH VARIES)	2 EA 3440 TO 11 790	239	16 (LENGTH VARIES)	2 EA 3440 TO 9930	168	12 (LENGTH VARIES)	2 EA 3440 TO 8080	109	8 (LENGTH VARIES)	2 EA 3440 TO 6220	61	20 (LENGTH VARIES)	2 EA 3440 TO 11790	239	16 (LENGTH VARIES)	2 EA 3440 TO 9930	168	12 (LENGTH VARIES)	2 EA 3440 TO 8080	109	8 (LENGTH VARIES)	2 EA 3440 TO 6220	61	6 (LENGTH VARIES)	2 EA 3440 TO 5290	41	4 (LENGTH VARIES)	2 EA 3440 TO 4370	25	b2
WINGWALL FFH		15	b3	2	12 290	39	2	10 440	33	2	8580	27	2	6730	21	2	12 290	39	2	10 440	33	2	8580	27	2	6730	21	2	5800	18	2	4870	15	b3
WINGWALL FFH		15	b4	22 (LENGTH VARIES)	2 EA 2510 TO 11 790	247	18 (LENGTH VARIES)	2 EA 2510 TO 9930	176	14 (LENGTH VARIES)	2 EA 2510 TO 8080	116	10 (LENGTH VARIES)	2 EA 2510 TO 6220	69	22 (LENGTH VARIES)	2 EA 2510 TO 11 790	247	18 (LENGTH VARIES)	2 EA 2510 TO 9930	176	14 (LENGTH VARIES)	2 EA 2510 TO 8080	116	10 (LENGTH VARIES)	2 EA 2510 TO 6220	69	8 (LENGTH VARIES)	2 EA 2510 TO 5290	49	6 (LENGTH VARIES)	2 EA 2510 TO 4370	32	b4
WINGWALL FFV		15	c1	76 (LENGTH VARIES)	2 EA 850 TO 4440	316	64 (LENGTH VARIES)	2 EA 850 TO 3860	237	52 (LENGTH VARIES)	2 EA 850 TO 3270	168	40 (LENGTH VARIES)	2 EA 850 TO 2690	111	76 (LENGTH VARIES)	2 EA 820 TO 4410	312	64 (LENGTH VARIES)	2 EA 830 TO 3830	234	52 (LENGTH VARIES)	2 EA 830 TO 3250	166	40 (LENGTH VARIES)	2 EA 830 TO 2670	110	32 (LENGTH VARIES)	2 EA 820 TO 2280	78	26 (LENGTH VARIES)	2 EA 820 TO 1990	57	c1
WINGWALL FFV		15	c2	4	4380	28	2	3780	12	2	3180	10	2	2580	8	4	4350	27	2	3750	12	2	3150	10	2	2550	8	4	2250	14	4	1950	12	c2
WINGWALL BFV		15	c3	12 (LENGTH VARIES)	2 EA 850 TO 1330	21	12 (LENGTH VARIES)	2 EA 850 TO 1330	21	12 (LENGTH VARIES)	2 EA 850 TO 1330	21	12 (LENGTH VARIES)	2 EA 850 TO 1330	21	12 (LENGTH VARIES)	2 EA 820 TO 1310	20	12 (LENGTH VARIES)	2 EA 830 TO 1310	20	12 (LENGTH VARIES)	2 EA 830 TO 1310	20	12 (LENGTH VARIES)	2 EA 830 TO 1310	20	12 (LENGTH VARIES)	2 EA 820 TO 1310	20	12 (LENGTH VARIES)	2 EA 820 TO 1310	20	c3
WINGWALL BFV		15	c4	64 (LENGTH VARIES)	2 EA 2630 TO 5640	415	52 (LENGTH VARIES)	2 EA 2630 TO 5060	314	40 (LENGTH VARIES)	2 EA 2630 TO 4470	223	28 (LENGTH VARIES)	2 EA 2630 TO 3890	143	64 (LENGTH VARIES)	2 EA 2610 TO 5610	413	52 (LENGTH VARIES)	2 EA 2610 TO 5030	312	40 (LENGTH VARIES)	2 EA 2610 TO 4450	222	28 (LENGTH VARIES)	2 EA 2610 TO 3870	142	20 (LENGTH VARIES)	2 EA 2610 TO 3480	96	14 (LENGTH VARIES)	2 EA 2610 TO 3190	64	c4
WINGWALL BFV		15	c5	50	3150	247	38	3150	188	26	3150	129	--	---	0	50	3150	247	38	3150	188	26	3150	129	--	--	0	--	--	0	--	--	0	c5
WINGWALL BFV		15	c6	4	5580	35	2	4980	16	2	4380	14	2	3780	12	4	5550	35	2	4950	16	2	4350	14	2	3750	12	4	3450	22	4	3150	20	c6
APRON, LONG BOT		15	d1	9	8250	117	9	7050	100	9	5850	83	9	4650	66	7	8250	91	7	7050	77	7	5850	64	7	4650	51	7	4050	45	7	3450	38	d1
APRON, LONG BOT		15	d2	6	10 830	102	6	8950	84	6	7100	67	6	5340	50	6	10 830	102	6	8950	84	6	7100	67	6	5340	50	6	4440	42	6	3560	34	d2
APRON, LONG TOP		20	f1	12	8250	233	12	7050	199	12	5850	165	12	4650	131	10	8250	194	10	7050	166	10	5850	138	10	4650	110	10	4050	95	10	3450	81	f1
APRON, LONG TOP		20	f2	18 (LENGTH VARIES)	2 EA 530 TO 7040	160	14 (LENGTH VARIES)	2 EA 940 TO 5840	112	12 (LENGTH VARIES)	2 EA 540 TO 4640	73	8 (LENGTH VARIES)	2 EA 950 TO 3430	41	18 (LENGTH VARIES)	2 EA 530 TO 7040	160	14 (LENGTH VARIES)	2 EA 940 TO 5840	112	12 (LENGTH VARIES)	2 EA 540 TO 4640	73	8 (LENGTH VARIES)	2 EA 950 TO 3430	41	8 (LENGTH VARIES)	2 EA 340 TO 2830	30	6 (LENGTH VARIES)	2 EA 550 TO 2220	20	f2
APRON, LONG TOP		20	f3	2	12 290	58	2	10 440	49	2	8580	40	2	6730	32	2	12 290	58	2	10 440	49	2	8580	40	2	6730	32	2	5800	27	2	4870	23	f3
PARAPET, VERT		15	l1	25	1850	73	25	1850	73	25	1850	73	25	1850	73	21	1850	61	21	1850	61	21	1850	61	21	1850	61	21	1850	61	21	1850	61	l1
PARAPET, HORIZ		25	j1	4	4110	65	4	4010	63	4	4010	63	4	3960	62	4	3510	55	4	3410	54	4	3410	54	4	3360	53	4	3360	53	4	3360	53	j1
APRON, TRANS TOP		20	m1	35 (LENGTH VARIES)	4030 TO 7590	479	29 (LENGTH VARIES)	3920 TO 6860	368	24 (LENGTH VARIES)	3920 TO 6340	290	18 (LENGTH VARIES)	3870 TO 5660	202	35 (LENGTH VARIES)	3430 TO 7000	480	29 (LENGTH VARIES)	3320 TO 6260	327	24 (LENGTH VARIES)	3320 TO 5740	256	18 (LENGTH VARIES)	3270 TO 5060	177	15 (LENGTH VARIES)	3270 TO 4740	141	12 (LENGTH VARIES)	3270 TO 4430	109	m1
APRON, TRANS BOT		20	m2	24 (LENGTH VARIES)	2340 TO 5790	230	20 (LENGTH VARIES)	2340 TO 5190	177	16 (LENGTH VARIES)	2340 TO 4590	131	12 (LENGTH VARIES)	2340 TO 3990	89	24 (LENGTH VARIES)	1740 TO 5190	196	20 (LENGTH VARIES)	1740 TO 4590	149	16 (LENGTH VARIES)	1740 TO 3990	108	12 (LENGTH VARIES)	1740 TO 3390	72	10 (LENGTH VARIES)	1740 TO 3090	57	8 (LENGTH VARIES)	1740 TO 2790	43	m2
CURTAIN, HORIZ		20	p1	4	3590	34	4	3590	34	4	3590	34	4	3590	34	4	2990	28	4	2990	28	4	2990	28	4	2990	28	4	2990	28	4	2990	28	p1
CURTAIN, HORIZ		20	p2	8	5600	106	8	4850	91	8	4100	77	8	3330	63	8	5600	106	8	4850	91	8	4100	77	8	3330	63	8	2980	56	8	2600	49	p2
WING SLOPE EF		20	s1	4	2460	23	4	2460	23	4	2460	23	4	2460	23	4	2460	23	4	2460	23	4	2460	23	4	2460	23	4	2460	23	4	2460	23	s1
WING SLOPE EF		20	s2	4	11 200	106	4	9250	87	4	7300	69	4	5350	50	4	11 200	106	4	9250	87	4	7300	69	4	5350	50	4	4370	41	4	3400	32	s2
WING SLOPE FF		20	s3	2	12 840	60	2	10 890	51	2	8940	42	2	6990	33	2	12 840	60	2	10 890	51	2	8940	42	2	6990	33	2	6020	28	2	5040	24	s3
CURTAIN, VERT		15	t1	32	2410	121	28	2260	99	24	2110	80	20	1960	62	30	2410	114	26	2260	92	22	2110	73	18	1960	55	16	1960	49	14	1960	43	t1
	REINF STEEL			3596 kg			2811 kg			2157 kg			1481 kg			3405 kg			2646 kg			2016 kg			1366 kg		1135 kg			924 kg			
ESTIMATED QUANTITIES ONE HEADWALL	CONC	PARAPET Δ		1.3	47.2 m³		1.2	33.8 m³		1.2	25.0 m³		1.1	16.8 m³		1.1	44.0 m³		1.1	31.2 m³		1.1	22.9 m³		1.0	15.2 m³		1.0	12.5 m³		1.0	10.0 m³		
		WINGS		16.5			10.0			6.8			3.8			16.5			10.0			6.8			3.8			2.8			1.9			
		FOOTING		29.4			22.6			17.0			11.9			26.4			20.1			15.0			10.4			8.7			7.1			

Δ NOTE:

INCLUDES TOP OF WINGWALL QUANTITIES.

BENT BAR DETAILS

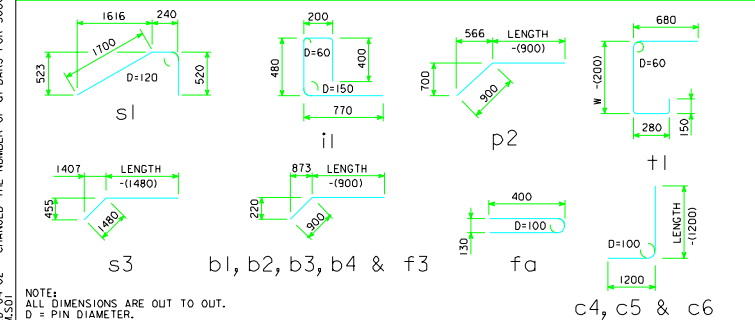

NOTE:
ALL DIMENSIONS ARE OUT TO OUT.
D = PIN DIAMETER.

HEADWALL NOTES:

THIS HEADWALL IS BASED ON A 3:1 SLOPE NORMAL TO CENTERLINE OF ROADWAY.

THE SIDES OF THE FOOTING ARE TO BE FORMED TO INSURE CORRECT LINE AND GRADE.

ALL EXPOSED CORNERS OF 90° OR SHARPER ARE TO BE FILLETED WITH A 20 mm DRESSED AND BEVELED STRIP.

ALL REINFORCING IS TO BE SECURELY WIRED IN PLACE BEFORE THE CONCRETE IS POURED. ALL SLAB AND FLOOR REINFORCING STEEL IS TO BE SUPPORTED BY BAR CHAIRS AT INTERVALS OF NOT MORE THAN 900 mm IN EITHER DIRECTION AS OUTLINED IN THE STANDARD SPECIFICATIONS.

CLEAR DISTANCE FROM FACE OF CONCRETE TO NEAR REINFORCING BAR IS TO BE 50 mm UNLESS OTHERWISE NOTED OR SHOWN. CLEARANCE TO THE BOTTOM ENDS OF VERTICAL BARS SHALL BE 75 mm.

CONCRETE QUANTITIES ARE ESTIMATED FROM BACK OF PARAPET.

HORIZONTAL TAILS OF BARS "b" & "s" ESTIMATED TO EXTEND 600 mm BEYOND BACK OF PARAPET (INTO END OF BARREL). LONGITUDINAL BARS "d", "f1", AND "f3" ESTIMATED TO PROJECT INTO END SECTION OF BARREL A MINIMUM OF 600 mm BEYOND BACK OF PARAPET.

THE "LENGTH" COLUMN REFLECTS TOTAL NUMBER OF MILLIMETERS NECESSARY TO MEET CLEARANCE REQUIREMENTS. "MASS" COLUMN INCLUDES AN ALLOWANCE OF 650 mm FOR LAP ON BARS THAT ARE OVER 12 000 mm LONG.

ALL DIMENSIONS ARE IN MILLIMETERS (mm) UNLESS OTHERWISE NOTED OR SHOWN.

NOTES:

1. SEE SHEET MRCB-GI-95 FOR GENERAL INFORMATION, SPECIFICATIONS, AND DESIGN STRESSES.

LATEST REVISION DATE : 04-02

APPROVED BY : William A. Nordquist

STANDARD DESIGN

FLARED WING HEADWALLS

FOR
REINFORCED CONCRETE BOX CULVERTS

PROJECT DEVELOPMENT DIVISION
IOWA DEPARTMENT OF TRANSPORTATION

JULY, 1995

MFWH 0-1-95

REVISED 1/98; BEND DIMENSIONS OF i1 BAR CHANGED.

REVISED 04-02 - CHANGED THE NUMBER OF d1 BARS FOR 3600 SPANS. CONCRETE QUANTITIES ADJUSTED.

FWHOIM.SDI

XXXXXXXXXXSYSTEMTIME XXXXXXXXUSERNAME XXXXXXXXXX