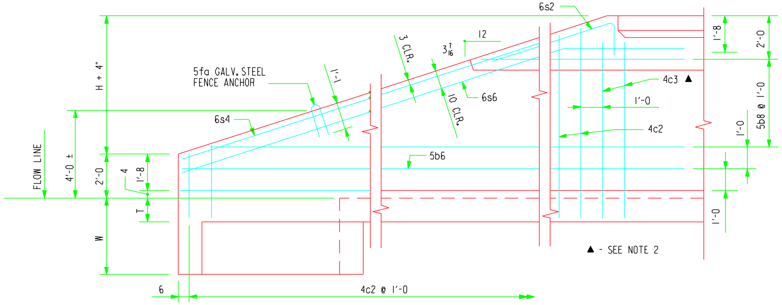

TYPICAL VIEW - FRONT FACE REINFORCING SHORT WINGWALL

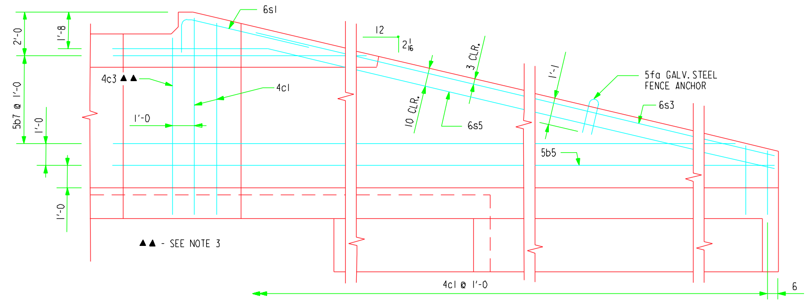

TYPICAL VIEW - FRONT FACE REINFORCING LONG WINGWALL

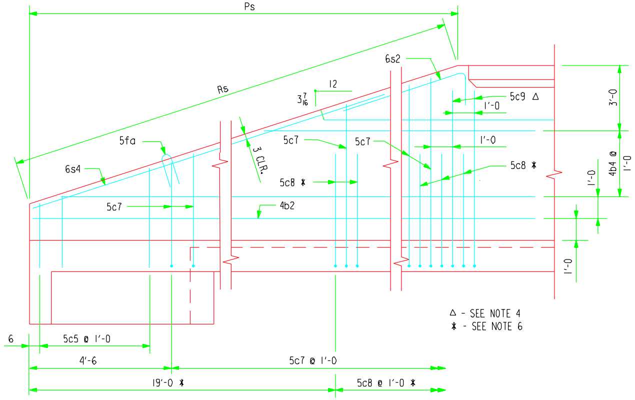

TYPICAL VIEW - BACK FACE REINFORCING SHORT WINGWALL

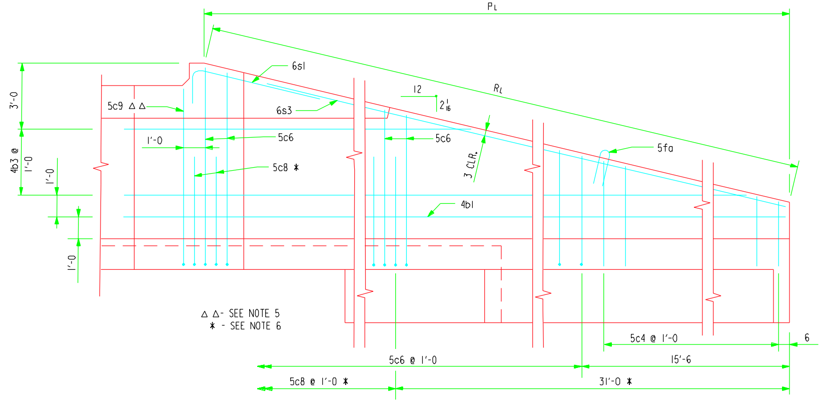

TYPICAL VIEW - BACK FACE REINFORCING LONG WINGWALL

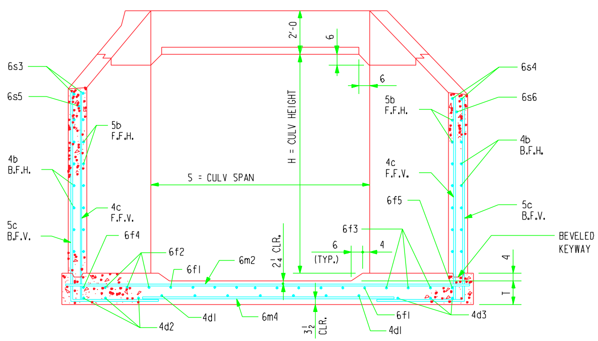

TYPICAL SECTION - NEAR CENTER OF APRON

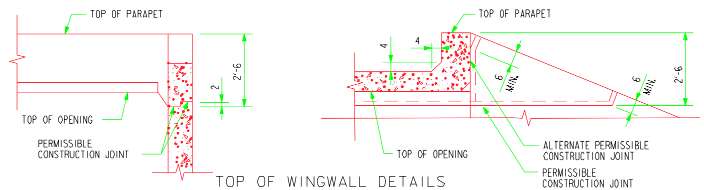

TOP OF WINGWALL DETAILS

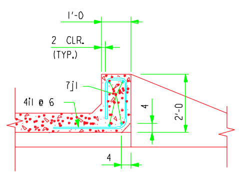

SECTION THRU PARAPET

NOTES :

1. BAR SPACINGS AND POSITIONS SHOWN ARE SIMILAR FOR ALL SIZES OF HEADWALLS IN THIS STANDARD.
2. ONE 4c3 BAR, HEADWALL HEIGHTS OF H=3', H=5' AND TWO 4c3 BARS, HEADWALL HEIGHTS OF H=4', H=6', H=8', H=10' AND H=12'.
3. ONE 4c3 BAR, HEADWALL HEIGHTS OF H=6', H=8', H=12' AND TWO 4c3 BARS, HEADWALL HEIGHTS OF H=3', H=4', H=5', H=10'.
4. ONE 5c9 BAR, HEADWALL HEIGHTS OF H=3', H=5' AND TWO 5c9 BARS, HEADWALL HEIGHTS OF H=4', H=6', H=8', H=10' AND H=12'.
5. ONE 5c9 BAR, HEADWALL HEIGHTS OF H=6', H=8', H=12' AND TWO 5c9 BARS, HEADWALL HEIGHTS OF H=3', H=4', H=5', H=10'.
6. NOT APPLICABLE TO HEADWALL HEIGHTS OF H=3', H=4', H=5' AND H=6'.
7. FOR DIMENSION TABLE SEE DWG. FWH 45-4-87.

LATEST REVISION DATE : 1-1-98

APPROVED BY :

STANDARD DESIGN

FLARED WING HEADWALLS

FOR

REINFORCED CONCRETE BOX CULVERTS

HIGHWAY DIVISION
IOWA DEPARTMENT OF TRANSPORTATION

MAY , 1987

FWH 45-6-87

REVISED 1/98; CLEAR DISTANCE TO 4i1 BAR CHANGED.
REVISED : 12/96 ; KEYWAY NOTATION CHANGED.
FWH456.S01

XXXXXXXXXXSYSTEMTIME XXXXXXXUSERNAME XXXXXXXXXXXXXXXXXXXXXXXXXXXXXXXXXXXXXXXXXXXXXXXXXXXXXXXXXXXXXDGNSPEC