*The k9 and m9 bars are to be placed in the top slab and bottom floor unless the horizontal legs of the k2 and m2 bars touch or lap. The pedestrian tunnel barrel standards identify when the k9 and m9 bars are omitted.

Note:
Typical for lengths of 38', 35', 32', 29', and 26'. These lengths are shown as typical because all transverse and vertical reinforcing steel spacing repeats in 3'-0" intervals.

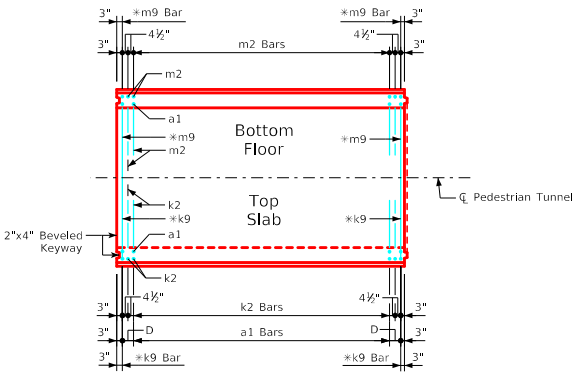

Standard Section Plan View
(Keyway is to be omitted when bell joints are used)

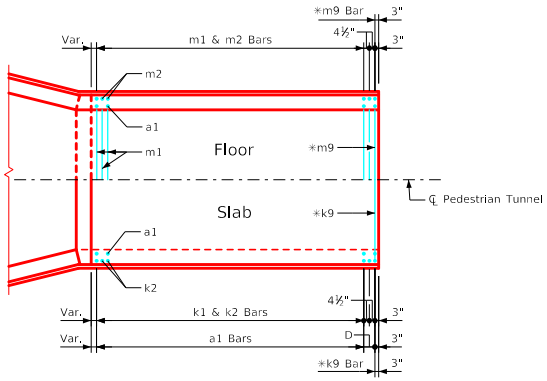

End Section Plan View
(Keyways not shown)

Note:
All longitudinal barrel steel shall extend at least to the backface of parapet.

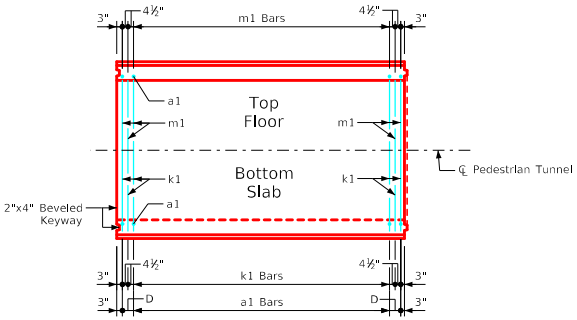

Standard Section Plan View
(Keyway is to be omitted when bell joints are used)

5r1 Bars - One Const. Jt.		
Span	No.	Weight (LB)
12'-0"	13	47
14'-0"	15	55

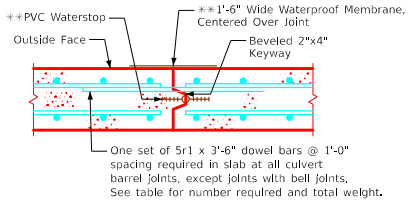

Slab Construction Joint Detail

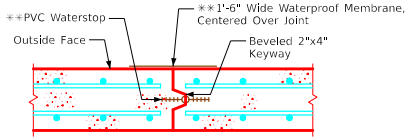

Wall Construction Joint Detail

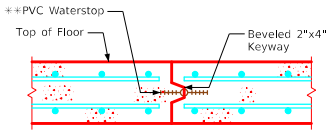

Floor Construction Joint Detail

**Note:
Omit PVC waterstop and waterproof membrane when bell joints are used.

Note:
Dimensions listed on this sheet to be used in conjunction with dimensions and quantities for barrel section sheets.

LATEST REVISION DATE

APPROVED BY BRIDGE ENGINEER

IOWADOT Highway Division

Cast-In-Place Standard Design - Walkways and Trails

Reinforced Concrete Pedestrian Tunnel

August, 2020

Typical Tunnel Details

PT G2-20

ENGLISH_LRFD_SIGNED_PEDESTRIAN_TUNNEL_STANDARDS.DGN - PT G2-20 - THIS SHEET ISSUED 08-2020