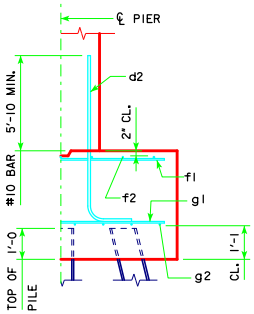

TYPICAL SECTION

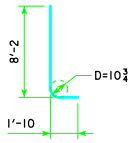

d2

NOTE: D = PIN DIAMETER.
DIMENSIONS ARE OUT TO OUT.

NOTE: THE REINFORCING STEEL QUANTITY IS TO BE INCLUDED ON THE SUMMARY QUANTITIES SHEET IN THE PLAN.

NOTE: THE CONCRETE QUANTITY IS TO BE INCLUDED ON THE SUMMARY QUANTITIES SHEET IN THE PLAN.

NOTE: THE PILE TYPE IS TO BE INCLUDED ON THE SUMMARY QUANTITIES SHEET IN THE PLAN.

H IN FT.	℄ - ℄ ABUT. BRG.	PILING (HP10x57) NO. & LAYOUT	① LRFD PU, STRENGTH I DES. BRG. (KIPS)	FOOTING SIZE
16 TO 18	201'-4	22A	143	3'-6 x 10'-6 x 25'
	213'-10	23A	145	
	226'-4	24A	143	
	243'-0	25A	146	
19 TO 21	201'-4	22A	147	3'-6 x 10'-6 x 25'
	213'-10	24A	140	
	226'-4	24A	146	
	243'-0	26A	144	
22 TO 24	201'-4	23A	146	3'-6 x 10'-6 x 25'
	213'-10	24A	143	
	226'-4	25A	146	
	243'-0	27A	144	

FOOTING SIZE	REINFORCING STEEL (ONE FOOTING) BAR	NO., SIZE & SPACING	LENGTH	WEIGHT (LB.)	TOTAL WEIGHT (LB.)	STRUCTURAL CONCRETE (CY)
3'-6 x 10'-6 x 25'	d2	50 - #10 AS SHOWN	10'-0	2152	4174	34.0
	f1	25 - #5 @ 1'-0	10'-2	265		
	f2	11 - #5 @ 1'-0	24'-8	283		
	g1	32 - #8 @ 0'-9	10'-2	869		
	g2	12 - #7 @ 0'-10½	24'-8	605		

FOOTING NOTES:

THESE FOOTINGS ARE DESIGNED AND DETAILED TO BE USED WITH THE CAP AND COLUMN DETAILS OF THE TEE PIERS AS SHOWN ON SHEET H44-66-14.

BATTER PILES IN EXTERIOR ROWS 1:4 IN THE DIRECTION SHOWN.

STEEL PILING USED AS POINT BEARING SHALL HAVE A MINIMUM DISTANCE OF APPROXIMATELY 10 FEET FROM BOTTOM OF FOOTING TO TOP OF BEARING ROCK. THE PILE LAYOUTS ARE SUCH THAT THE DISTANCE CENTER TO CENTER OF ADJACENT PILING SHALL NOT EXCEED 8'-0.

PIER PILES SHALL BE DRIVEN TO VALUES SHOWN IN DESIGN PLANS.

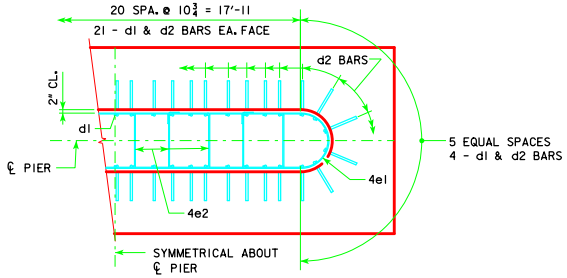

d2 BAR LAYOUT

(SEE SECTION A-A ON SHEET H44-66-14.)

① NOTE: PU, STRENGTH I DESIGN LOAD (KIPS) IS NOT THE VALUE USED IN THE FIELD FOR DRIVING PILES.

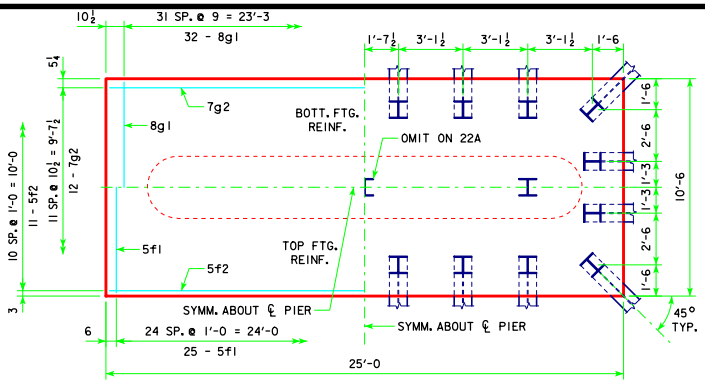

3'-6 x 10'-6 x 25'-0 FOR 22A & 23A

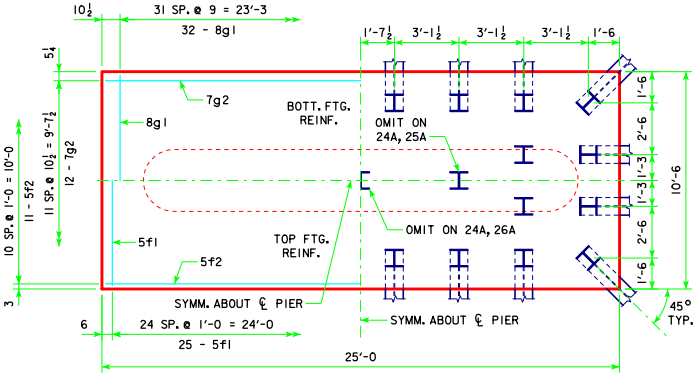

3'-6 x 10'-6 x 25'-0 FOR 24A, 25A, 26A & 27A

LATEST REVISION DATE

APPROVED BY BRIDGE ENGINEER

IOWA DOT Highway Division

STANDARD DESIGN - 44' ROADWAY, THREE SPAN BRIDGE

PRETENSIONED PRESTRESSED CONCRETE BEAM BRIDGES

SEPTEMBER, 2014

TEE PIER-HP10x57 SRL-1 STEEL PILE FOOTINGS

30° SKEW - H=16' TO 24'

H44-68-14