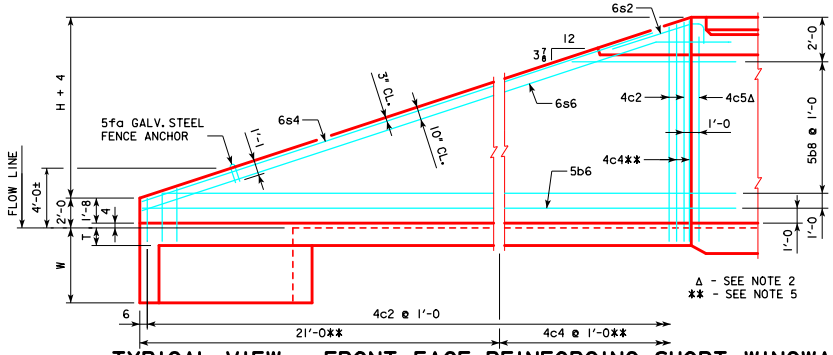


TYPICAL VIEW - FRONT FACE REINFORCING SHORT WINGWALL

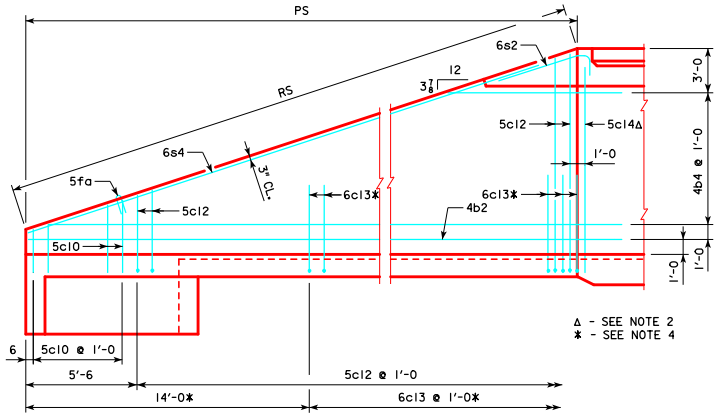


TYPICAL VIEW - BACK FACE REINFORCING SHORT WINGWALL

| CULVERT HEIGHT (H) | SLOPE y INCHES |
|---|---|
| 4' | 3 3/4 |
| 5' | 4 1/16 |
| 6' | 4 1/4 |
| 7' | 4 3/8 |
| 8' | 4 1/2 |
| 9' | 4 9/16 |
| 10' | 4 5/8 |
| 11' | 4 11/16 |
| 12' | 4 3/4 |

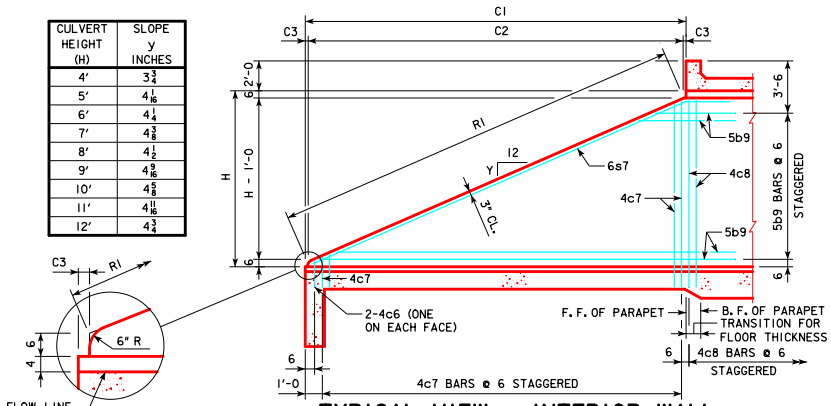


TYPICAL VIEW - INTERIOR WALL

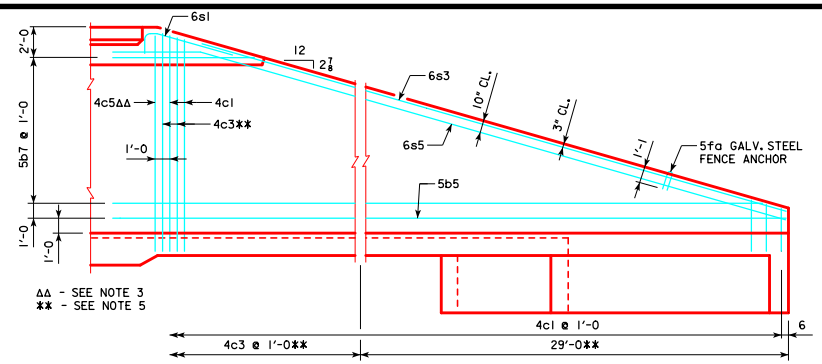


TYPICAL VIEW - FRONT FACE REINFORCING LONG WINGWALL

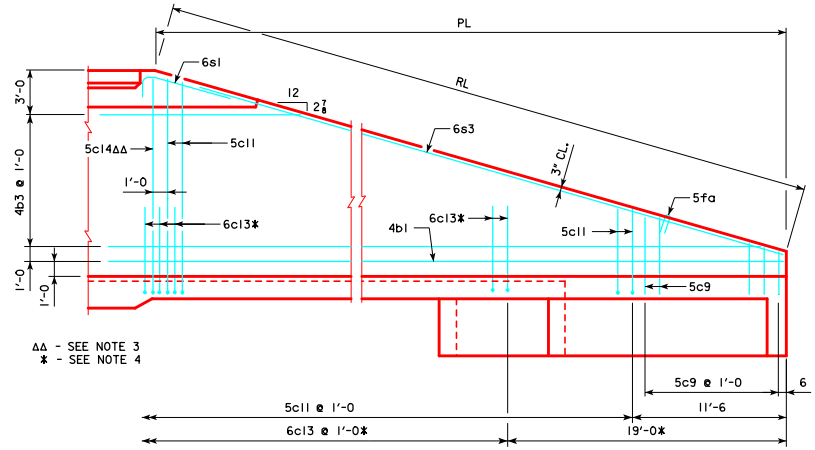


TYPICAL VIEW - BACK FACE REINFORCING LONG WINGWALL

## NOTES:

1. BAR SPACINGS AND POSITIONS SHOWN ARE SIMILAR FOR ALL SIZES OF HEADWALLS IN THIS STANDARD.
2. TWO 4c5 & TWO 5c14 BARS FOR 4', 8', 9', 10', 11' & 12' HEIGHT HEADWALLS. ONE 4c5 & ONE 5c14 BAR FOR 5', 6' & 7' HEIGHT HEADWALLS.
3. TWO 4c5 & TWO 5c14 BARS FOR 4', 5', 6', 10', 11' & 12' HEIGHT HEADWALLS. ONE 4c5 & ONE 5c14 BAR FOR 7', 8' & 9' HEIGHT HEADWALLS.
4. NOT APPLICABLE FOR 4' & 5' HEADWALLS.
5. NOT APPLICABLE FOR 4' THRU 8' HEIGHT HEADWALLS.
6. FOR DIMENSION TABLE SEE SHEET TWH 30-2-12.

07-2016
LATEST REVISION DATE

APPROVED BY BRIDGE ENGINEER

Iowa Department of Transportation
Highway Division

STANDARD DESIGN

# TWIN REINFORCED CONCRETE BOX CULVERTS

APRIL, 2012

## FLARED WING HEADWALLS

30° SKEW

TWH 30-5-12

REVISED 05-13 - CHANGED DIMENSIONS WHEN TO BEGIN PLACING BARS 4c3, 4c4, 5c11, 5c12, & 6c13 IN WINGWALLS.
REVISED 07-2016 - REMOVED 1'-8 VERTICAL DIMENSION FROM 6s5 & 6s6 BARS TO TOP OF PARAPET. THIS ALLOWS FOR THE VARIABLE VERTICAL LOCATION OF THE HORIZONTAL LEG IN THE SLAB. THIS VARIANCE IN LOCATION IS CAUSED BY THE DIFFERING WING SIZES OF DIFFERENT SIZED R.C.B. CULVERTS.
ENGLISH\REDESIGNED\TWINCULVERTS.DGN - TWH 30-5-12 - THIS SHEET ISSUED 04-12.