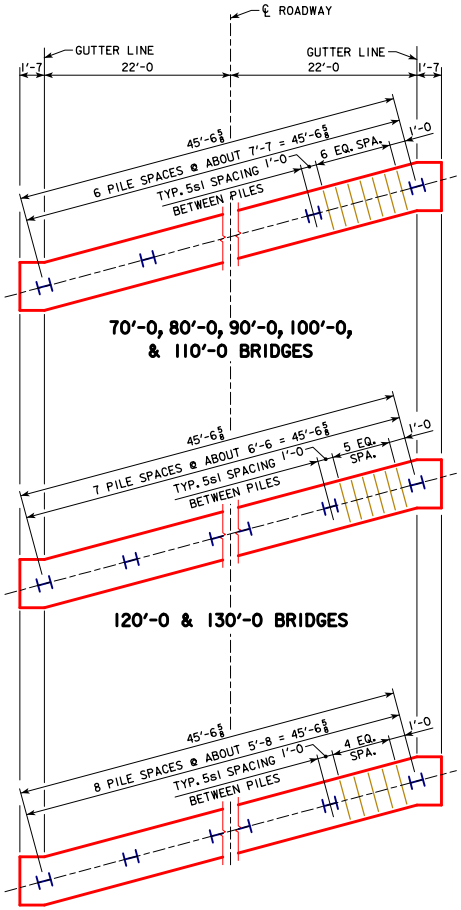

PILE PLAN - 15° SKEW
STEEL PILING

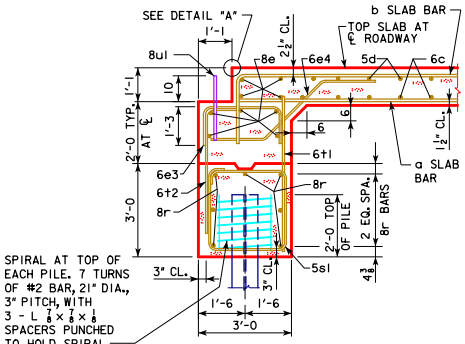

SECTION NORMAL
TO ABUTMENT AT ℄

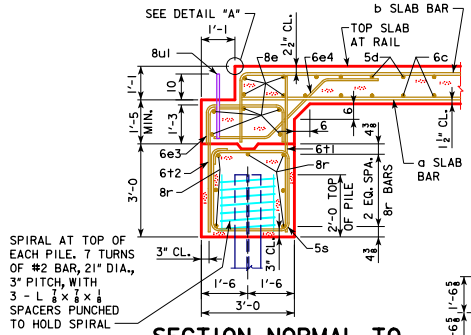

SECTION NORMAL TO
ABUTMENT AT GUTTERLINE

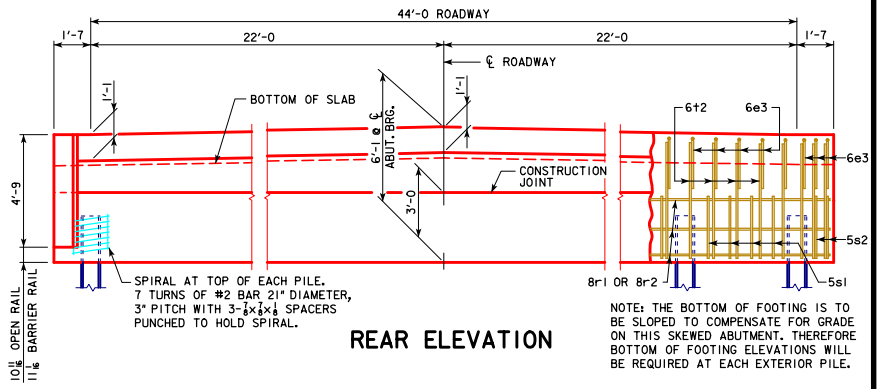

NOTE: THE BOTTOM OF FOOTING IS TO BE SLOPED TO COMPENSATE FOR GRADE ON THIS SKEWED ABUTMENT. THEREFORE BOTTOM OF FOOTING ELEVATIONS WILL BE REQUIRED AT EACH EXTERIOR PILE.

REAR ELEVATION

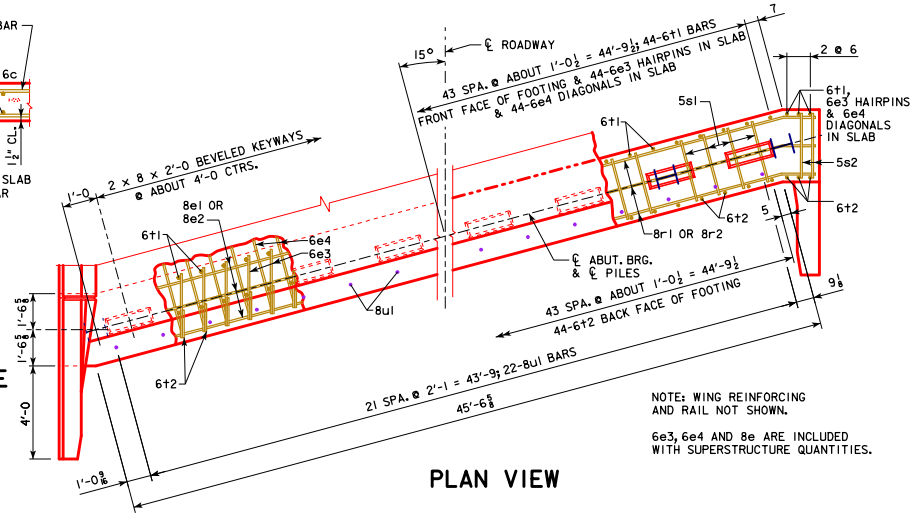

NOTE: WING REINFORCING AND RAIL NOT SHOWN.

6e3, 6e4 AND 8e ARE INCLUDED WITH SUPERSTRUCTURE QUANTITIES.

PLAN VIEW

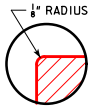

DETAIL "A"

ABUTMENT NOTES:

ALL PILING HP10x42.

THE CONCRETE AND REINFORCING STEEL FOR THE WINGS IS INCLUDED WITH THE SUPERSTRUCTURE.

DETAILS ON THIS SHEET ARE TO BE USED ONLY WHEN ABUTMENTS ARE PLACED ON STEEL PILES. IF ROCK IS ENCOUNTERED CLOSER THAN 12' BELOW ABUTMENT FOOTING, SPECIAL ANALYSIS MAY BE REQUIRED.

THE MINIMUM CLEAR DISTANCE FROM THE FACE OF THE CONCRETE TO NEAR REINFORCING BAR IS TO BE 2 INCHES UNLESS OTHERWISE NOTED OR SHOWN.

STEEL ABUTMENT PILES SHALL BE DRIVEN TO FULL PENETRATION IF PRACTICABLE BUT IN NO CASE TO A BEARING VALUE LESS THAN SHOWN IN DESIGN PLANS.

ALL REINFORCING STEEL IS TO BE GRADE 60.

ABUTMENT PILING WAS DESIGNED FOR HL-93 LOADING WITH AN ALLOWANCE FOR 20 LBS. PER SQ. FT. FUTURE WEARING SURFACE.

NUMBER OF PILES AND ABUTMENT DESIGN LOADS

BRIDGE LENGTH	70'-0	80'-0	90'-0	100'-0	110'-0	120'-0	130'-0	140'-0	150'-0
PILING - NUMBER	7	7	7	7	7	8	8	9	9
PU, STRENGTH I DESIGN LOAD - KIPS	509	544	577	618	658	705	749	Δ 875	Δ 927

Δ INCLUDES DYNAMIC LOAD ALLOWANCE
NOTE: PU, STRENGTH I DESIGN LOAD (KIPS) IS NOT THE VALUE USED IN THE FIELD FOR DRIVING PILES.

03-2016
LATEST REVISION DATE

APPROVED BY BRIDGE ENGINEER

IOWA DOT Highway Division

STANDARD DESIGN - 44' ROADWAY, 3 SPAN BRIDGES

CONTINUOUS CONCRETE SLAB BRIDGES

JULY, 2014

ABUTMENT DETAILS
15° SKEW - STEEL PILING

J44-40-14

REVISED 03-2016 - REVISION FOR ADDITION OF PAVING NOTCH BAR 8u1.