DESIGNER INFO

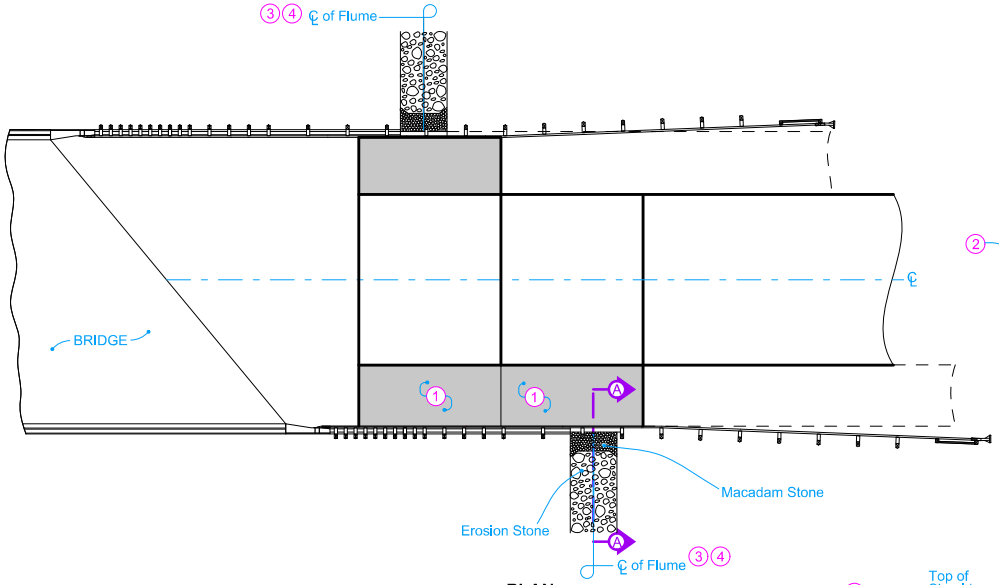

PLAN

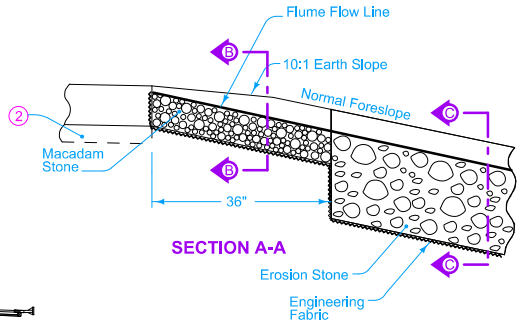

SECTION A-A

Price bid for "Bridge End Drain, DR-402" is full compensation for furnishing, installing, and constructing the Bridge End Drain as shown.

1. Continue 4 inch sloped curb to edge of flume per section B-B. Refer to BR-201, BR-202, BR-203, or BR-204 for details of 4 inch curb.
2. Install modified subbase and polymer grid under PCC shoulder panels as shown in Section A-A on BR-201, BR-202,or BR-203, or BR-204.
3. DI-1 and DI-2 distances measured from center of Bolt Pattern.
4. Extend rock flume to low point of ditch.
5. Transitions from 2 inches at edge of pavement to 8 inches within 3 feet.

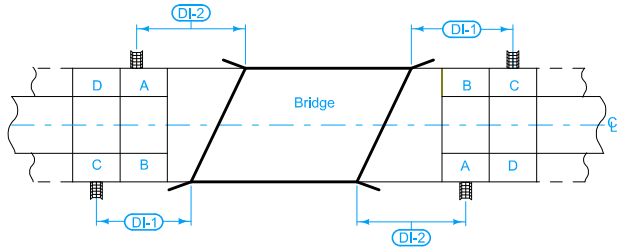

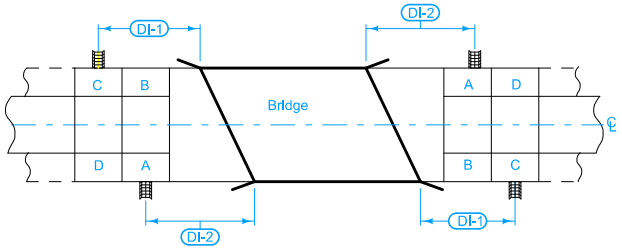

PCC SHOULDER PANEL LOCATIONS 3

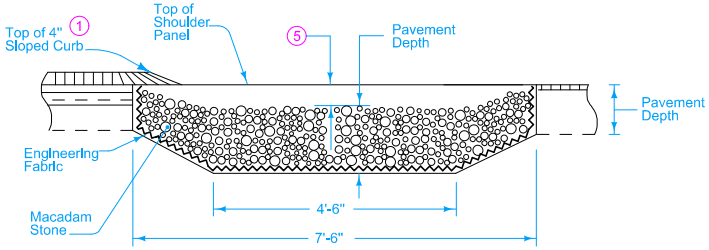

SECTION B-B

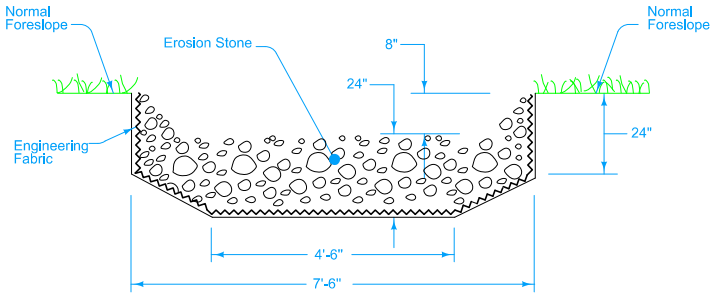

SECTION C-C

Possible Contract Items:
- Paved Shoulder, Portland Cement Concrete (Paved Shoulder Panel for Bridge-End Drain)
- Bridge End Drain, DR-402

Incidental to Paved Shoulder:
- Modified Subbase
- Polymer Grid

Incidental to Bridge End Drain:
- Macadam Stone Base Material
- Erosion Stone
- Engineering Fabric
- Excavation, hauling, and disposing of material

Possible Tabulation:
- 104-8A

IOWA DOT

STANDARD ROAD PLAN

REVISION	
1	04-19-16

DR-402

SHEET 1 of 1

REVISIONS: Modified note 3 to eliminate requirement to place center of flume a minimum of 9 feet from a joint.

Brian Smith
APPROVED BY DESIGN METHODS ENGINEER

ROCK FLUME FOR BRIDGE END DRAIN