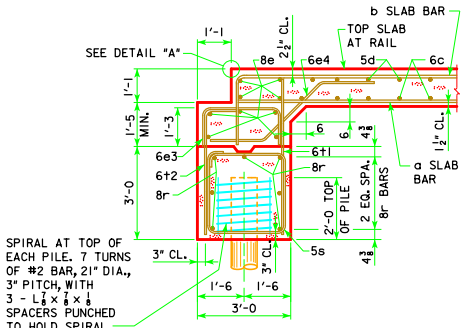

SECTION NORMAL TO ABUTMENT AT GUTTERLINE

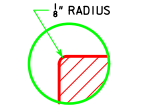

DETAIL "A"

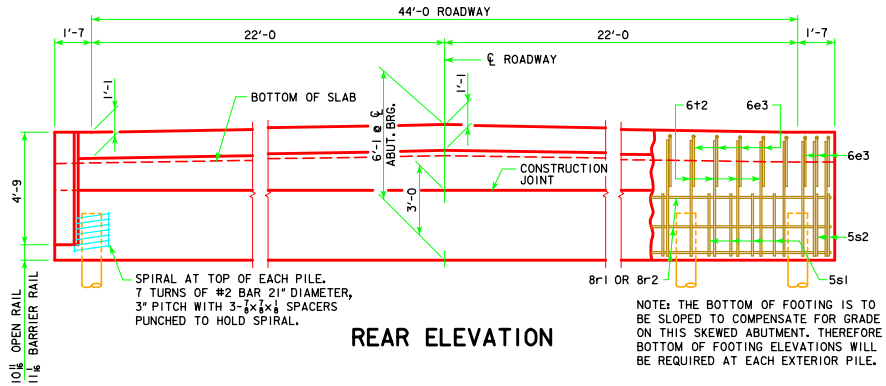

REAR ELEVATION

NOTE: THE BOTTOM OF FOOTING IS TO BE SLOPED TO COMPENSATE FOR GRADE ON THIS SKEWED ABUTMENT. THEREFORE BOTTOM OF FOOTING ELEVATIONS WILL BE REQUIRED AT EACH EXTERIOR PILE.

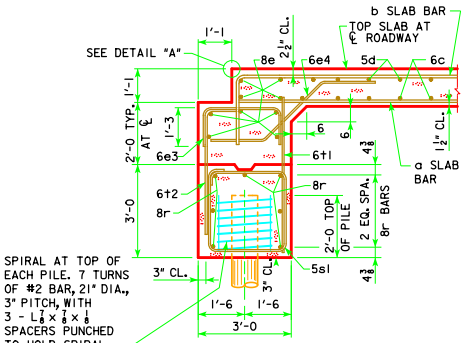

SECTION NORMAL TO ABUTMENT AT ℄

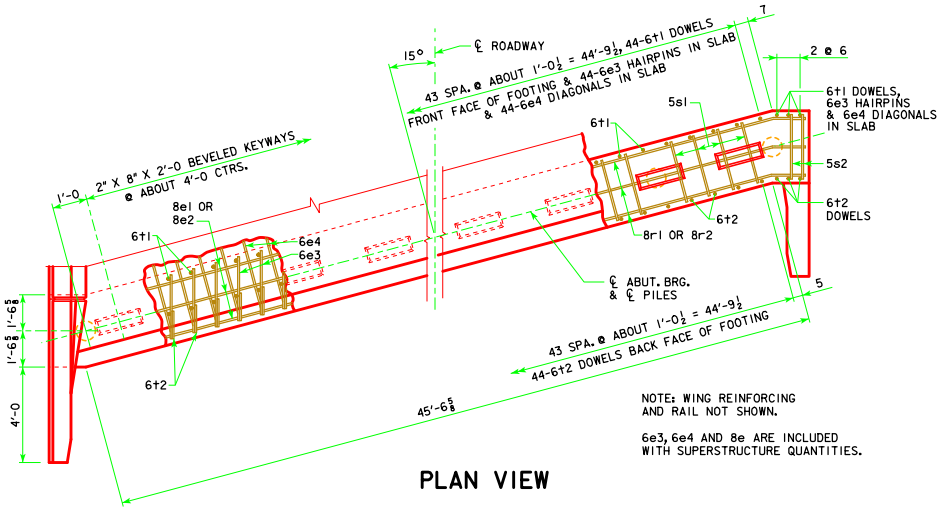

NOTE: WING REINFORCING AND RAIL NOT SHOWN.

6e3, 6e4 AND 8e ARE INCLUDED WITH SUPERSTRUCTURE QUANTITIES.

PLAN VIEW

ABUTMENT NOTES:

THE CONCRETE AND REINFORCING STEEL FOR THE WINGS IS INCLUDED WITH THE SUPERSTRUCTURE.

DETAILS ON THIS SHEET ARE TO BE USED ONLY WHEN ABUTMENTS ARE PLACED ON TIMBER PILES.

THE MINIMUM CLEAR DISTANCE FROM THE FACE OF THE CONCRETE TO NEAR REINFORCING BAR IS TO BE 2 INCHES UNLESS OTHERWISE NOTED OR SHOWN.

TIMBER PILES SHALL BE DRIVEN TO FULL PENETRATION IF PRACTICABLE BUT IN NO CASE TO A BEARING VALUE LESS THAN SHOWN IN DESIGN PLANS. TIMBER PILES SHALL NOT BE DRIVEN TO MORE THAN 160 TONS.

ALL REINFORCING STEEL IS TO BE GRADE 60.

ABUTMENT PILING WAS DESIGNED FOR HL-93 LOADING WITH AN ALLOWANCE FOR 20 LBS. PER SQ. FT. FUTURE WEARING SURFACE.

NUMBER OF PILES AND ABUTMENT DESIGN LOADS

BRIDGE LENGTH	70'-0	80'-0	90'-0	100'-0	110'-0	120'-0	130'-0	140'-0	150'-0
PILING - NUMBER	10	11	11	12	13	13	14	16	17
PU, STRENGTH I DESIGN LOAD - KIPS	509	544	577	618	658	705	749	Δ 875	Δ 927

Δ INCLUDES DYNAMIC LOAD ALLOWANCE
NOTE: PU, STRENGTH I DESIGN LOAD (KIPS) IS NOT THE VALUE USED IN THE FIELD FOR DRIVING PILES.

06-13
LATEST REVISION DATE

APPROVED BY BRIDGE ENGINEER

Iowa Department of Transportation
Highway Division

STANDARD DESIGN - 44' ROADWAY, 3 SPAN BRIDGES

CONTINUOUS CONCRETE SLAB BRIDGES

NOVEMBER, 2006

ABUTMENT DETAILS
15° SKEW - TIMBER PILING

J44-32-06

REVISED 06-13 - REVISION FOR LRFD PILE DESIGN.