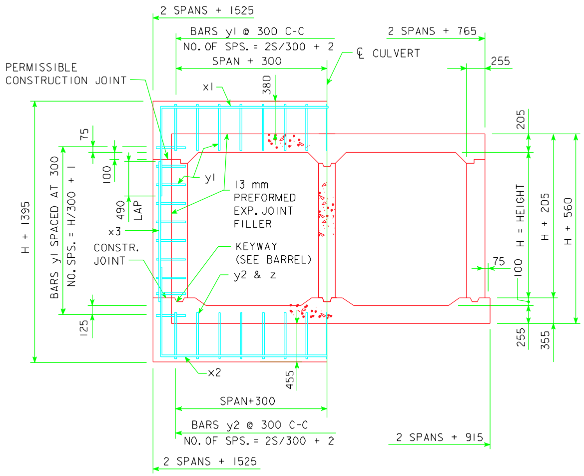

JOINT DETAIL
SECTION THRU BARREL

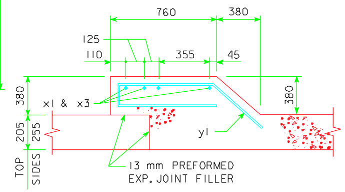

TOP & SIDES - BARS y1

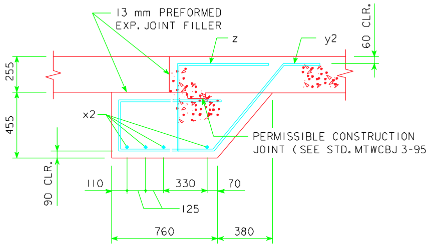

BOTTOM BARS - y2 & z

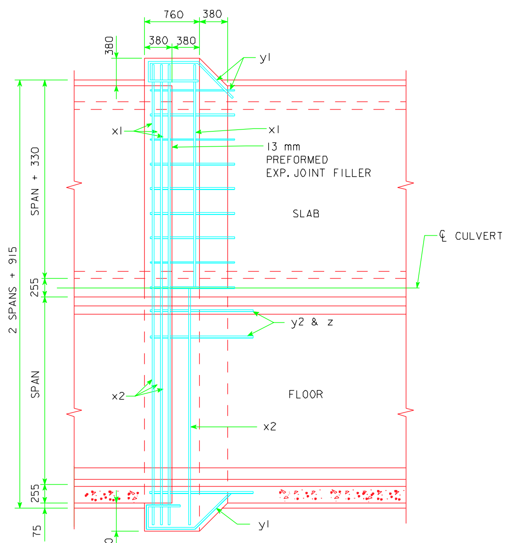

PLAN VIEW

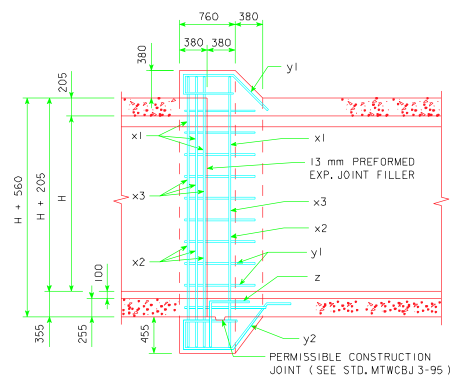

LONGITUDINAL SECTION

ESTIMATE OF QUANTITIES - ONE JOINT - 3000 SPAN

BILL OF REINFORCING STEEL			3000x1800				3000x2400				3000x3000				3000x3600			
MARK	LOCATION	SHAPE	SIZE	NO.	LENGTH	MASS	SIZE	NO.	LENGTH	MASS	SIZE	NO.	LENGTH	MASS	SIZE	NO.	LENGTH	MASS
x1	SLAB AND WALLS		20	4	10 510	99	20	4	10 510	99	20	4	10 510	99	20	4	10 510	99
x2	FLOOR AND WALLS		20	4	10 510	99	20	4	10 510	99	20	4	10 510	99	20	4	10 510	99
x3	WALLS		20	8	895	17	20	8	1495	28	20	8	2095	39	20	8	2695	51
y1	TOP AND SIDES		20	39	2390	220	20	43	2390	242	20	47	2390	265	20	51	2390	287
y2	BOTTOM		20	23	2710	147	20	23	2710	147	20	23	2710	147	20	23	2710	147
z	BOTTOM & FLOOR		20	23	1100	60	20	23	1100	60	20	23	1100	60	20	23	1100	60
TOTAL MASS						642 kg				675 kg				709 kg				743 kg
TOTAL CONCRETE m^3						8.3				8.7				9.1				9.6

ESTIMATE OF QUANTITIES - ONE JOINT - 3600 SPAN

BILL OF REINFORCING STEEL			3600x1800				3600x2400				3600x3000				3600x3600			
MARK	LOCATION	SHAPE	SIZE	NO.	LENGTH	MASS	SIZE	NO.	LENGTH	MASS	SIZE	NO.	LENGTH	MASS	SIZE	NO.	LENGTH	MASS
x1	SLAB AND WALLS		20	4	11 710	110	20	4	11 710	110	20	4	11 710	110	20	4	11 710	110
x2	FLOOR AND WALLS		20	4	11 710	110	20	4	11 710	110	20	4	11 710	110	20	4	11 710	110
x3	WALLS		20	8	895	17	20	8	1495	28	20	8	2095	39	20	8	2695	51
y1	TOP AND SIDES		20	43	2390	242	20	47	2390	265	20	51	2390	287	20	55	2390	310
y2	BOTTOM		20	27	2710	172	20	27	2710	172	20	27	2710	172	20	27	2710	172
z	BOTTOM & FLOOR		20	27	1100	70	20	27	1100	70	20	27	1100	70	20	27	1100	70
TOTAL MASS						721 kg				755 kg				788 kg				823 kg
TOTAL CONCRETE m^3						9.2				9.7				10.0				10.5

A = SLAB THICKNESS
B = FLOOR THICKNESS
C = WALL THICKNESS

CONCRETE PLACEMENT m^3

SIZE	FOOTING	WALLS	SLAB
3000x1800	3.816	1.227	3.193
3000x2400	3.816	1.661	3.193
3000x3000	3.816	2.094	3.193
3000x3600	3.816	2.527	3.193
3600x1800	4.335	1.227	3.626
3600x2400	4.335	1.661	3.626
3600x3000	4.335	2.094	3.626
3600x3600	4.335	2.527	3.626

BENT BAR DETAILS

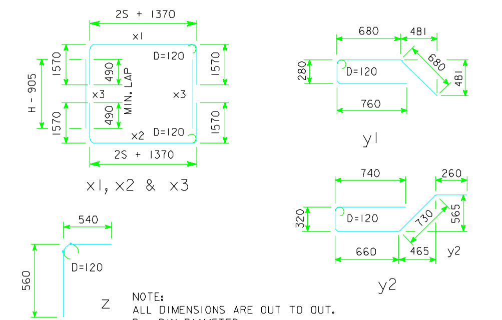

NOTE:
ALL DIMENSIONS ARE OUT TO OUT.
D = PIN DIAMETER.

NOTES:

1. DIMENSIONS AND QUANTITIES SHOWN BASED ON SLAB THICKNESSS OF 205 mm WALL= 255 mm, AND FLOOR = 255 mm.
2. CHANGE LENGTHS OF BARS x1, x2, z AND ADJUST REINFORCING STEEL AND CONCRETE QUANTITIES ACCORDINGLY FOR SLAB, WALL, AND FLOOR THICKNESSES OTHER THAN SHOWN.
3. ALL BAR LENGTHS ARE ESTIMATED WITH A 50 mm CLEARANCE FROM CONCRETE EDGE TO OUTSIDE OF BAR, EXCEPT AS NOTED.
4. MATERIAL AND CONSTRUCTION TO BE IN ACCORDANCE WITH CURRENT STANDARD SPECIFICATIONS OF I.D.O.T..
5. SEE SHEET MTWRCB-G1-95 FOR GENERAL INFORMATION, SPECIFICATIONS, AND DESIGN STRESSES.
6. BARS x1 AND x2 MAY BE FURNISHED IN TWO EQUAL LENGTHS ADDING 24 DIAMETERS TO THE OVERALL LENGTH FOR LAP. THE ABOVE IS TO BE PERFORMED AT NO ADDITIONAL COST TO THE CONTRACTING AUTHORITY.
7. BARREL FLOOR BARS m1 ARE TO BE SHORTENED 150 mm AT BELL JOINTS.

LATEST REVISION DATE : 04-02
APPROVED BY :

STANDARD DESIGN

CULVERT BELL JOINTS

FOR
TWIN REINFORCED CONCRETE BOX CULVERTS
3000 mm & 3600 mm SPANS

PROJECT DEVELOPMENT DIVISION
IOWA DEPARTMENT OF TRANSPORTATION

JULY, 1995

MTWCBJ 2-95

REVISED 04-02 - ADDED PERMISSIBLE CULVERT BELL JOINT. ADDED x3 BARS TO DETAILS AND BAR LIST.
TWCBJ2M.S01

XXXXXXXXXXSYSTEMTIME XXXXXXXUSERNAME XXXXXXXXXXXXXXXXXXXXXXXXXXXXXXXXXXXXXXXXXXXXXXXXXXXXXXXXXXXXXXXXDGNSPEC