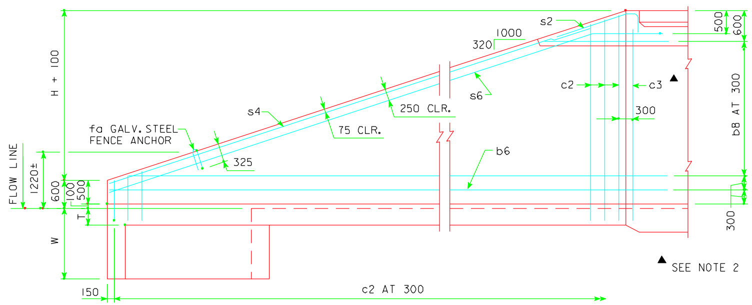

TYPICAL VIEW - FRONT FACE REINFORCING SHORT WINGWALL

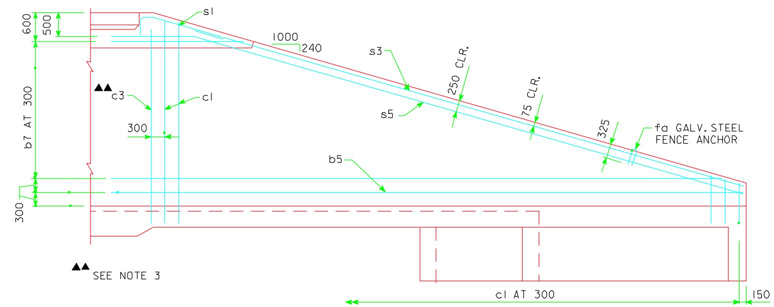

TYPICAL VIEW - FRONT FACE REINFORCING LONG WINGWALL

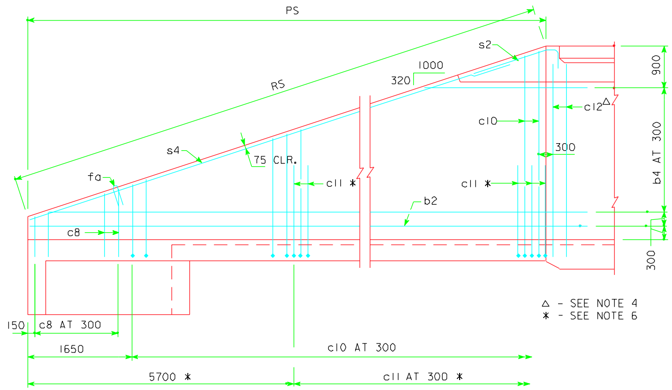

TYPICAL VIEW - BACK FACE REINFORCING SHORT WINGWALL

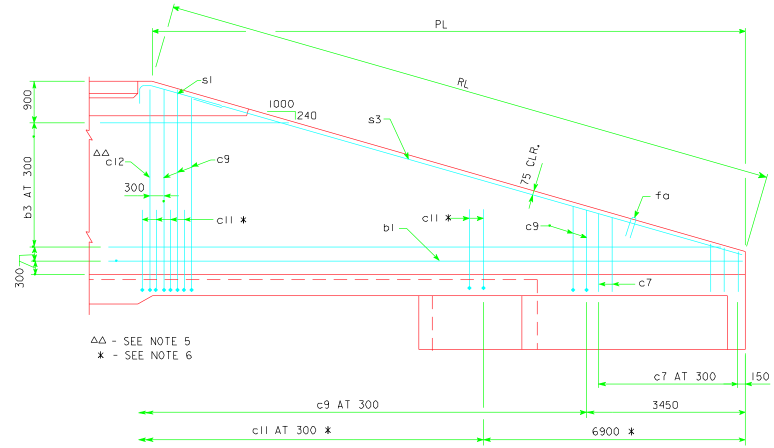

TYPICAL VIEW - BACK FACE REINFORCING LONG WINGWALL

CULVERT HEIGHT (H)	SLOPE Y
1800	353
2400	372
3000	385
3600	394

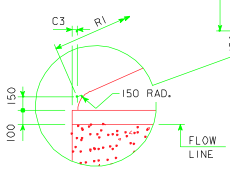

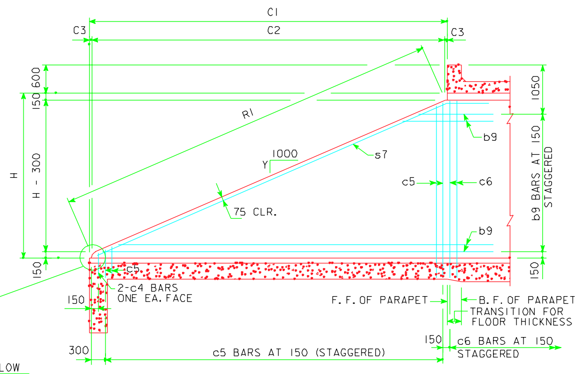

TYPICAL VIEW - INTERIOR WALL

NOTES:

1. BAR SPACINGS AND POSITIONS SHOWN ARE SIMILAR FOR ALL SIZES OF HEADWALLS IN THIS STANDARD.
2. ONE c3 BAR, HEADWALL HEIGHTS OF H=1800 mm, H=2400 mm AND TWO c3 BARS, HEADWALL HEIGHTS OF 3000 mm AND 3600 mm.
3. ONE c3 BAR, HEADWALL HEIGHT OF 2400 mm AND TWO c3 BARS, HEADWALL HEIGHTS OF 1800 mm, 3000 mm AND 3600 mm.
4. ONE c12 BAR, HEADWALL HEIGHTS OF 1800 mm, 2400 mm AND TWO c12 BARS, HEADWALL HEIGHTS OF 3000 mm AND 3600 mm.
5. ONE c12 BAR, HEADWALL HEIGHT OF 2400 mm AND TWO c12 BARS, HEADWALL HEIGHTS OF 1800 mm, 3000 mm AND 3600 mm.
6. NOT APPLICABLE TO HEADWALL HEIGHT OF 1800 mm.
7. FOR DIMENSION TABLE SEE SHEET MTRH 30-1-94

LATEST REVISION DATE : 04-02

APPROVED BY : [signature]

STANDARD DESIGN

FLARED WING HEADWALLS

FOR

TRIPLE REINFORCED CONCRETE BOX CULVERTS

PROJECT DEVELOPMENT DIVISION
IOWA DEPARTMENT OF TRANSPORTATION

DECEMBER, 1994

MTRH 30-4-94

REVISED 04-02 - CHANGED BAR CLEARANCES.
TRH304M.S01

XXXXXXXXXXSYSTEMTIME XXXXXXXUSERNAME XXXXXXXXXXXXXXXXXXXXXXXXXXXXXXXXXXXXXXXXXXXXXXXXXXXXXXXXXXXXDGNSPEC