CULVERT HEIGHT (H)	ANGLE	
	ØL	ØS
1800	31°02′	49°40′
2400	30°50′	48°55′
3000	30°43′	48°27′
3600	30°38′	48°09′

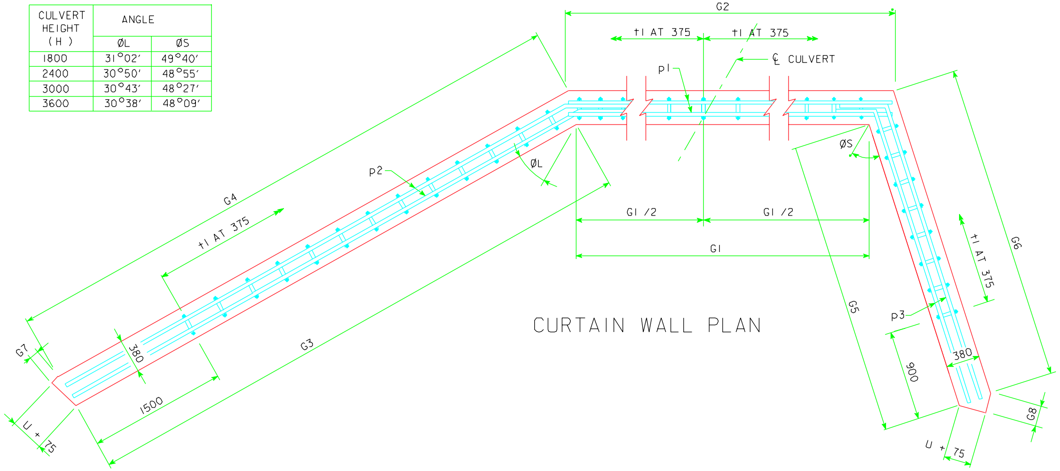

CURTAIN WALL PLAN

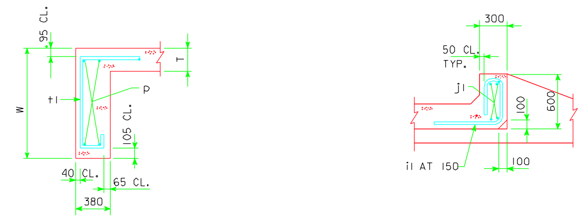

SECTION THRU CURTAIN WALL

SECTION THRU PARAPET

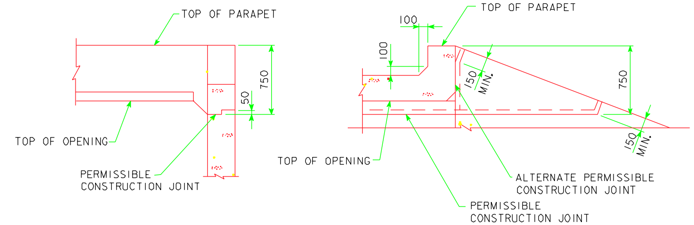

TOP OF WINGWALL DETAILS

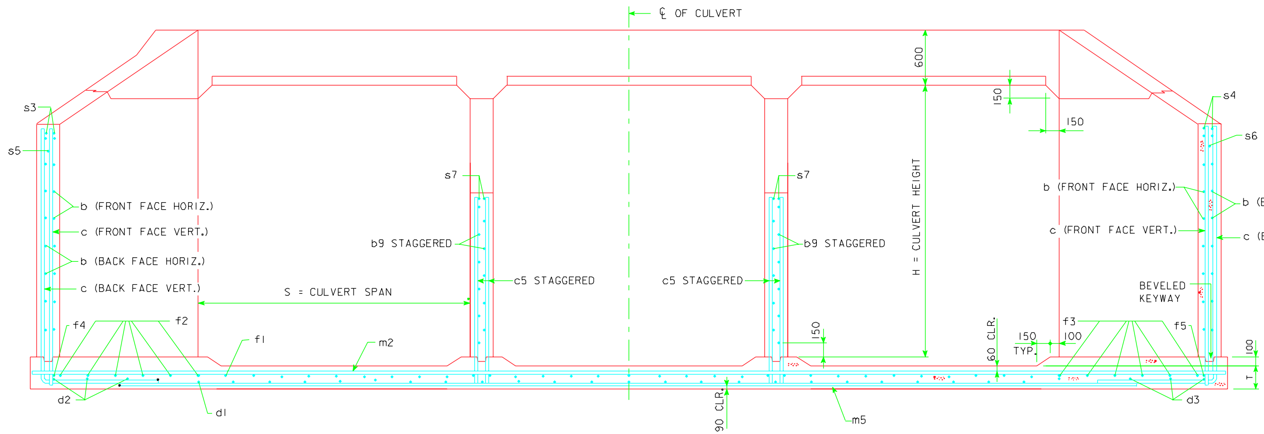

TYPICAL SECTION - NEAR CENTER OF APRON

NOTES:

1. SEE SHEET MTRRCB-GI-94 FOR GENERAL INFORMATION, SPECIFICATIONS, AND DESIGN STRESSES.
2. FOR DIMENSION TABLE SEE SHEET MTRH 30-1-94

LATEST REVISION DATE : 04-02

APPROVED BY :

STANDARD DESIGN

FLARED WING HEADWALLS

FOR

TRIPLE REINFORCED CONCRETE BOX CULVERTS

PROJECT DEVELOPMENT DIVISION

IOWA DEPARTMENT OF TRANSPORTATION

DECEMBER, 1994

MTRH 30-3-94

REVISED 12-96 - KEYWAY NOTATION CHANGED.
REVISED 1-98 - CLEAR DISTANCE TO i1 BAR CHANGED.
REVISED 04-02 - CHANGED BAR CLEARANCES AND PARAPET DIMENSIONS.
TRH303M.SOI

XXXXXXXXXSYSTEMTIME XXXXXXXUSERNAME XXXXXXXXXXXXXXXXXXXXXXXXXXXXXXXXXXXXXXXXXXXXXXXXXXXXXXXXXDGNSPEC