Design Guide for Precast UHPC Waffle Deck Panel System, including Connections

Publication No. FHWA-HIF-13-032
June 2013

HIGHWAYS FOR LIFE

Accelerating Innovation for the American Driving Experience.

U.S. Department of Transportation
Federal Highway Administration

Notice

This document is disseminated under the sponsorship of the U.S. Department of Transportation in the interest of information exchange. The U.S. Government assumes no liability for the use of the information contained in this document.

The U.S. Government does not endorse products or manufacturers. Trademarks or manufacturers' names appear in this report only because they are considered essential to the objective of the document.

Quality Assurance Statement

The Federal Highway Administration (FHWA) provides high-quality information to serve Government, industry, and the public in a manner that promotes public understanding. Standards and policies are used to ensure and maximize the quality, objectivity, utility, and integrity of its information. FHWA periodically reviews quality issues and adjusts its programs and processes to ensure continuous quality improvement.

Technical Report Documentation Page

1. Report No. FHWA-HIF-13-032	**2. Government Accession No.**	**3. Recipient's Catalog No.**
4. Title and Subtitle Design Guide for Precast UHPC Waffle Deck Panel System, including Connections		**5. Report Date** June 2013 **6. Performing Organization Code**
7. Author(s) Sriram Aaleti, Bradley Petersen, and Sri Sritharan		**8. Performing Organization Report No.** InTrans Project 11-425
9. Performing Organization Name and Address Bridge Engineering Center Iowa State University 2711 South Loop Drive, Suite 4700 Ames, IA 50010-8664		**10. Work Unit No. (TRAIS)** **11. Contract or Grant No.**
12. Sponsoring Organization Name and Address Federal Highway Administration U.S. Department of Transportation 1200 New Jersey Avenue SE Washington, DC 20590		**13. Type of Report and Period Covered** Final Report **14. Sponsoring Agency Code** SPR 90-00-RB12-012
15. Supplementary Notes Visit www.intrans.iastate.edu for related research reports.		

16. Abstract

As a part of an innovation project funded by the Federal Highway Administration (FHWA) Highways for LIFE program, a full-depth precast, ultra-high-performance concrete (UHPC) waffle deck panel and appropriate connections suitable for field implementation of waffle decks were developed.

Following a successful full-scale validation test on a unit consisting of two panels with various types of connections under laboratory conditions, the waffle deck was installed successfully on a replacement bridge in Wapello County, Iowa. The subsequent load testing confirmed the desirable performance of the UHPC waffle deck bridge.

Using the lessons from the completed project and outcomes from a series of simple and detailed finite element analyses of waffle decks, this report was developed to serve as a guide for broadening the design and installation of the UHPC waffle deck panel in new and existing bridges.

Following an introduction to UHPC and waffle deck panels and a summary of completed work, this document presents information on waffle deck design, design of connections, redecking using waffle deck panels, and guidance on precast fabrication, construction, and installation of UHPC waffle deck panels.

17. Key Words accelerated bridge construction—bridge deck connections—bridge design—bridge panel systems—bridge redecking—Highways for LIFE—load testing—precast bridge sections—replacement bridges—ultra-high-performance concrete—waffle decks—Wapello County Iowa		**18. Distribution Statement** No restrictions. This document is available to the public through the National Technical Information Service, Springfield, VA 22161.	
19. Security Classification (of this report) Unclassified.	**20. Security Classification (of this page)** Unclassified.	**21. No. of Pages** 125	**22. Price** NA

Form DOT F 1700.7 (8-72) **Reproduction of completed page authorized**

SI* (MODERN METRIC) CONVERSION FACTORS

APPROXIMATE CONVERSIONS TO SI UNITS

Symbol	When You Know	Multiply By	To Find	Symbol
		LENGTH		
in	inches	25.4	millimeters	mm
ft	feet	0.305	meters	m
yd	yards	0.914	meters	m
mi	miles	1.61	kilometers	km
		AREA		
in^2	square inches	645.2	square millimeters	mm^2
ft^2	square feet	0.093	square meters	m^2
yd^2	square yard	0.836	square meters	m^2
ac	acres	0.405	hectares	ha
mi^2	square miles	2.59	square kilometers	km^2
		VOLUME		
fl oz	fluid ounces	29.57	milliliters	mL
gal	gallons	3.785	liters	L
ft^3	cubic feet	0.028	cubic meters	m^3
yd^3	cubic yards	0.765	cubic meters	m^3
	NOTE: volumes greater than 1000 L shall be shown in m^3			
		MASS		
oz	ounces	28.35	grams	g
lb	pounds	0.454	kilograms	kg
T	short tons (2000 lb)	0.907	megagrams (or "metric ton")	Mg (or "t")
		TEMPERATURE (exact degrees)		
°F	Fahrenheit	5 (F-32)/9 or (F-32)/1.8	Celsius	°C
		ILLUMINATION		
fc	foot-candles	10.76	lux	lx
fl	foot-Lamberts	3.426	candela/m^2	cd/m^2
		FORCE and PRESSURE or STRESS		
lbf	poundforce	4.45	newtons	N
lbf/in^2	poundforce per square inch	6.89	kilopascals	kPa

APPROXIMATE CONVERSIONS FROM SI UNITS

Symbol	When You Know	Multiply By	To Find	Symbol
		LENGTH		
mm	millimeters	0.039	inches	in
m	meters	3.28	feet	ft
m	meters	1.09	yards	yd
km	kilometers	0.621	miles	mi
		AREA		
mm^2	square millimeters	0.0016	square inches	in^2
m^2	square meters	10.764	square feet	ft^2
m^2	square meters	1.195	square yards	yd^2
ha	hectares	2.47	acres	ac
km^2	square kilometers	0.386	square miles	mi^2
		VOLUME		
mL	milliliters	0.034	fluid ounces	fl oz
L	liters	0.264	gallons	gal
m^3	cubic meters	35.314	cubic feet	ft^3
m^3	cubic meters	1.307	cubic yards	yd^3
		MASS		
g	grams	0.035	ounces	oz
kg	kilograms	2.202	pounds	lb
Mg (or "t")	megagrams (or "metric ton")	1.103	short tons (2000 lb)	T
		TEMPERATURE (exact degrees)		
°C	Celsius	1.8C+32	Fahrenheit	°F
		ILLUMINATION		
lx	lux	0.0929	foot-candles	fc
cd/m^2	candela/m^2	0.2919	foot-Lamberts	fl
		FORCE and PRESSURE or STRESS		
N	newtons	0.225	poundforce	lbf
kPa	kilopascals	0.145	poundforce per square inch	lbf/in^2

*SI is the symbol for the International System of Units. Appropriate rounding should be made to comply with Section 4 of ASTM E380. (Revised March 2003)

TABLE OF CONTENTS

CHAPTER 1. UHPC AND WAFFLE DECK SYSTEM 1

Introduction.....1
Ultra-High-Performance Concrete.....2
System Configuration and Benefits 14
Experimental and Field Testing Waffle Deck System.....16

CHAPTER 2. WAFFLE DECK PANEL DESIGN.....29

Introduction.....29
UHPC Waffle Deck Panel 29
Flexural Behavior of UHPC Members 48
Waffle Deck Panel Capacity Estimation.....55

CHAPTER 3. CONNECTIONS 67

Introduction.....67
Panel-to-Panel Connection Details 68
Panel-to-Girder Connection Details.....77

CHAPTER 4. DECK REPLACEMENT 85

Introduction.....85
Benefits of Precast System.....85
Current Practice 86
Use of UHPC Waffle Deck.....92

CHAPTER 5. FABRICATION/PRODUCTION, CONSTRUCTION, AND INSTALLATION.93

Prefabrication.....93
Fabrication of Shear Pocket.....96
Overlay.....97

CHAPTER 6. SUMMARY AND CONCLUSIONS.....109

Summary.....109
Conclusions.....109

REFERENCES 113

ACKNOWLEDGMENTS 117

LIST OF FIGURES

Figure 1. Graphs. Actual and recommended design stress-strain behavior of UHPC in compression. 6
Figure 2. Graphs. Measured and recommended design stress-strain behavior of UHPC in tension.7
Figure 3. Graph. Comparison of various equations suggested for elastic modulus of UHPC with measured experimental data. 9
Figure 4. Chart. Durability properties of UHPC and HPC with respect to normal concrete (lowest values identify the most favorable material.[26] 11
Figure 5. Diagrams. Schematic of UHPC waffle deck system. 15
Figure 6. Diagram. Cross-section details of the replacement bridge with UHPC waffle deck system in Wapello County, Iowa. 17
Figure 7. Diagrams. Connection details used for the UHPC waffle deck system. 18
Figure 8. Diagram and photos. Schematic of the test setup used for testing of the UHPC waffle deck panel system. 19
Figure 9. Diagrams and photos. Schematic of the displacement and strain gauges in the test unit.20
Figure 10. Graphs. Measured force-displacement response at the center of the waffle deck panel and the transverse panel-to-panel joint under service loads. 21
Figure 11. Graphs. Measured strain distribution along the transverse rib in the center of the panel and normalized strains at the center of the transverse ribs along the longitudinal direction under service load conditions. 22
Figure 12. Graph. Measured force-displacement response of waffle deck system. 23
Figure 13. Graph and photo. Measured force-displacement response and cracking at the center of the panel-to-panel joint under ultimate loads. 24
Figure 14. Graph and photos. Measured load-displacement behavior and failure surface during the punching shear failure test of waffle deck system. 25
Figure 15. Photo. Axle weight and configuration of the test truck. 26
Figure 16. Diagram. Schematic layout of the load paths used for field testing. 26
Figure 17. Diagrams. Schematic view of UHPC deck panel. 29
Figure 18. Diagrams. Illustrations of typical components of bridges. 31
Figure 19. Diagrams. Schematic of UHPC panels supported by girders. 32
Figure 20. Equation. The transverse strip width according to article 4.6.2.1.3 of AASHTO LRFD guidelines. 34
Figure 21. Equation. Self-weight of waffle deck for different rib spacing. 36
Figure 22. Equation. The dead load due to a 2-inch-thick wearing surface. 37
Figure 23. Equation. The design dead load at the strength-I limit state. 38
Figure 24. Equation. The positive and negative bending moment due to dead load for the design strip. 39
Figure 25. Equation. The design moment demand equation for strength-I limit state. 39
Figure 26. Equation. Cracking moment relationship for a rectangular section. 48
Figure 27. Diagrams. Strain and stress distribution along the cross-section at cracking and ultimate limit states. 49
Figure 28. Equation. UHPC compression force. 49
Figure 29. Equation. UHPC tension force. 49
Figure 30. Equation. Force equilibrium equation for the rectangular section. 50

Figure 31. Equation. Conditions for controlling limit states. 50
Figure 32. Equation. Neutral axis depth and moment capacity for compression limit state. 50
Figure 33. Equation. Neutral axis depth and moment capacity for tension limit state. 51
Figure 34. Equation. Positive and negative cracking moment for T-beam. 51
Figure 35. Diagrams. Stress profile for estimating the positive cracking moment of a T-shaped UHPC beam. 52
Figure 36. Diagrams. Strain and stress profiles for estimating the positive nominal moment of a T-shaped UHPC beam. 52
Figure 37. Equation. Concrete compression force. 53
Figure 38. Equation. UHPC tension force. 53
Figure 39. Equation. Force equilibrium. 53
Figure 40. Diagrams. Strain and stress profiles for estimating the negative nominal moment capacity of a T-shaped UHPC beam. 54
Figure 41. Diagrams. Cross-section of an equivalent strip for positive bending. 56
Figure 42. Equation. Flange width of equivalent T-beam for positive and negative bending. 56
Figure 43. Diagram. Details of an equivalent transverse rib in the positive bending strip. 58
Figure 44. Diagrams. The details of cross-sections considered for transverse ribs. 59
Figure 45. Diagrams. Critical section locations for overhang design and cross-sections of the waffle deck at those locations. 62
Figure 46. Equation. Tension force in deck panel due to collision loading. 64
Figure 47. Diagram. Locations of dead and live loads for design case III. 65
Figure 48. Diagram. Transverse connection detail tested for waffle deck panel at ISU.[40] 69
Figure 49. Diagrams. Panel-to-panel connection details used for HPC deck panels by NYSDOT with field-cast UHPC.[36] 70
Figure 50. Diagrams. NCHRP 10-71 longitudinal panel-to-panel connection.[46] 71
Figure 51. Photo. US Highway 6 demonstration bridge in Pottawattamie County, Iowa.[47] 71
Figure 52. Diagram. Global connection configuration.[47] 72
Figure 53. Diagram. SHRP 2 transverse connection detail.[47] 72
Figure 54. Diagram. Grouted shear key panel-to-panel detail.[48] 73
Figure 55. Diagram. Post-tensioned grouted shear key panel-to-panel transverse joint detail.[48] 74
Figure 56. Diagram. Post-tensioned transverse joint connection with simplified pocket geometry.[48] 75
Figure 57. Diagram. NCHRP 584 panel for system CD-1A.[50] 75
Figure 58. Diagram. NCHRP panel-to-panel connection interface.[50] 76
Figure 59. Diagram. Longitudinal connection tested for waffle deck at ISU.[40] 77
Figure 60. Diagram. A shear pocket connection tested at ISU.[40] 78
Figure 61. Diagram. FHWA panel-to-steel girder connection detail.[51] 79
Figure 62. Diagram. FHWA panel-to-concrete girder.[51] 79
Figure 63. Diagram. Panel-to-steel girder connection.[50] 80
Figure 64. Diagram. Panel-to-concrete girder connection.[50] 82
Figure 65. Diagram. Panel-to-girder (steel) shear stud connection.[54] 83
Figure 66. Diagrams. Extended stirrups and field-installed reinforcement as horizontal shear connectors.[49] 84
Figure 67. Photo. Jackhammering deck sections prior to removal. 88
Figure 68. Photo. Sawn deck section being removed by crane. 88
Figure 69. Photo. Existing superstructure with remaining reinforcement after deck removal. 89

Figure 70. Diagram. Shear pockets used for installing precast deck panels.[57] 90
Figure 71. Photo and diagram. Clustered headed shear stud arrangement for deck panel shear pocket.[60] 91
Figure 72. Diagram. Post-installed reinforcement as horizontal shear connector. 92
Figure 73. Photos. Construction of a UHPC panel. 93
Figure 74. Photos. Formwork used for waffle deck panel construction. 94
Figure 75. Diagrams. Full- and partial-depth shear pockets. 96
Figure 76. Photo. Test setup for characterization of skid resistance of textures using the British pendulum tester. 98
Figure 77. Photo. Close-up of shear pockets and shear hooks at Wapello County, Iowa, waffle deck bridge. 101
Figure 78. Photo. Watertight seal at panel-to-girder connection using quick setting spray. 102
Figure 79. Photos. Placement of waffle deck panels. 102
Figure 80. Photos. Transverse and longitudinal connections. 103
Figure 81. Photos. Batching of UHPC joint fill using IMER Mortarman 750 mixers in field....104
Figure 82. Photos. Filling of connection regions with in situ UHPC and completed connections.105
Figure 83. Photo. Finished transverse connections (panel-to-panel connection) covered with plywood.....106
Figure 84. Photo. Close-up of the waffle panel deck after grinding along the transverse and longitudinal deck connections.....107
Figure 85. Diagrams. Proposed transverse reinforcement configurations. 110

LIST OF TABLES

Table 1. Material composition of typical UHPC mix.[12] 2
Table 2. Durability properties of UHPC compared to HPC and NSC. 11
Table 3. Sequence and details of the tests conducted on the waffle deck system. 20
Table 4. Design strip width (W_{ts}) 35
Table 5. Load factors for different limit states. 35
Table 6. Recommended values for estimating dead load. 36
Table 7. Self-weight of the deck panel (w_{waffle}) in psf for different rib spacing. 37
Table 8. Properties of F-section continuous barrier rail as used by the Iowa DOT. 37
Table 9. Collision design parameters suggested for the Iowa standard F-type barrier. 38
Table 10. Suitable values for estimating the design moments for waffle deck panels due to dead load (self weight and wearing surface). 40
Table 11. Table A4-1 from AASHTO LRFD specifications with a load factor of 1.75 as the LL positive moment effect in strength-I limit state.[27] 42
Table 12. Table A4-1 from AASHTO LRFD specifications with a load factor of 1.75 as the LL negative moment effect in strength-I limit state).[27] 43
Table 13. The positive moment demand for waffle deck panel at strength-I limit state. 44
Table 14. The negative moment demand for waffle deck panel at strength-I limit state. 46
Table 15. T-beam internal forces and their location at ultimate limit state. 54
Table 16. T-beam internal forces and their location at ultimate limit state. 55
Table 17. Equivalent flange width for the T-section for different girder and rib spacing. 57
Table 18. Cracking and nominal moment capacity for UWP6T7B in kip-ft/ft. 60
Table 19. Cracking and nominal moment capacity for UWP6T6B in kip-ft/ft. 61
Table 20. Negative moment demands due to collision forces at critical locations. 63
Table 21. Moment capacity of the overhang section for deck panels with two different reinforcement configurations. 66
Table 22. Details of the textures and average sand patch diameters. 98
Table 23. Measured skid resistance values for different textured surfaces using British pendulum tester. 99

CHAPTER 1. UHPC AND WAFFLE DECK SYSTEM

INTRODUCTION

The combination of aging infrastructure, increasing numbers of structurally deficient or obsolete bridges, and continuous increases in traffic volume in the US demands rapid improvements to the Nation's bridge infrastructure with an emphasis on increasing bridge longevity. The increased emphasis on work zone safety and user costs associated with traffic delays, as well as quality and environmental impacts of the construction process, require development of technologies and structural details suitable for rapid construction. In consideration of these challenges, the Federal Highway Administration (FHWA) has been promoting accelerated bridge construction (ABC) methods using prefabricated bridge elements.

In the context of ABC, precast concrete deck panels are being utilized more and more by several State departments of transportation (DOTs) for both bridge deck replacements and new structures to reduce construction time.[1] Previous studies have shown that the use of prefabricated full-depth precast concrete deck systems can accelerate the construction and rehabilitation of bridge decks significantly, extend service life, lower life-cycle costs, and minimize delays and disruptions to the community.[2,3,4]

However, transverse connections used previously between precast bridge deck panels have exhibited various serviceability challenges due to cracking and poor construction of connections.[5,6] Therefore, it is imperative that durable and efficient field connections be developed to implement precast deck panels successfully in practice. These connections could utilize high-performance materials such as ultra-high-performance concrete (UHPC). In addition to these materials adhering well with precast components, the connection should be detailed to prevent cracking and leakage along the connection interfaces between precast elements.

UHPC is a newly developed concrete material that exhibits high compressive strength, dependable tensile strength, and excellent durability properties including very low permeability. The superior structural characteristics and durability of UHPC are perceived to provide major improvements over ordinary concrete and high-performance concrete (HPC) bridges in terms of long-term structural efficiency, durability, and cost-effectiveness. Hence, the construction of new bridges and renewal of aging highway bridges using UHPC has been explored in terms of improving construction efficiency, enhancing bridge performance, and reducing maintenance and life-cycle costs.

Previous use of UHPC for bridge applications (mostly in bridge girders) in the US has proven to be efficient and economical. (See references 7, 8, 9, and 10.) This guide focuses on a new bridge deck application.

A prefabricated UHPC waffle deck system with field-cast UHPC connections was developed as part the FHWA Highways for LIFE (HfL) program by combining the advantages of UHPC with

those of precast deck systems. An integrated experimental and analytical study was performed to evaluate the performance of the precast UHPC waffle deck system and UHPC connections under laboratory and field conditions.

This study found that the UHPC waffle deck system performed extremely well under service and fatigue loading conditions. In addition, the ultimate capacity tests revealed that the UHPC waffle deck system has significantly higher capacity than the required design level capacity, suggesting potential improvements to the design of the UHPC waffle deck system and reduction in the construction costs. The benefits of the UHPC waffle deck system, along with a summary of the experimental and field studies, are presented later in this chapter.

Given the success of the precast UHPC waffle deck system and increased interest in full-depth precast deck panels for ABC, the goal of this guide is to increase the awareness, improve efficiency, and broaden the use of UHPC waffle deck systems for new and replacement bridges.

This guide provides the technical and practical information necessary to allow future bridge owners to consider the use of UHPC waffle slabs in a wide variety of bridge types. Detailed recommendations for the design, detailing, and construction of a full-depth precast UHPC waffle deck system are presented. An introduction to the UHPC waffle deck system, material properties of UHPC, and design guidelines are presented in the next sections.

ULTRA-HIGH-PERFORMANCE CONCRETE

UHPC is defined worldwide as concrete with a compressive strength of at least 22 ksi.[11] In recent years, Lafarge North America has been marketing Ductal, a form of UHPC with steel fibers, which regularly achieves compressive strengths of 24 to 30 ksi. UHPC is an advanced, highly engineered, cementitious material consisting of typical portland cement, fine aggregate made of sand, silica fume, crushed quartz, steel fibers, super plasticizers, and high water reducers. The typical composition of UHPC is shown in table 1.

Table 1. Material composition of typical UHPC mix.[12]

Material	Amount, lb/yd^3	Percent by Weight
Portland Cement	1200	28.5
Fine Sand	1720	40.8
Silica Fume	390	9.3
Ground Quartz	355	8.4
Super plasticizer	51.8	1.2
Accelerator	50.5	1.2
Steel Fibers	263	6.2
Water	184	4.4

A few notable differences in the UHPC composition when compared to HPC are the lack of typical coarse aggregate, addition of steel fibers, high proportions of cementitious materials, and low water/cement ratio. The use of powder and well-graded components helps in achieving a high packing density of the UHPC constituents and leads to significantly improved mechanical properties such as increased compressive strength and considerable tensile strength as compared to HPC and normal-strength concrete (NSC). In addition, UHPC demonstrates a very dense cement matrix creating a low permeability concrete, which greatly enhances its resistance to corrosion and degradation.

In precast environments, UHPC is commonly subjected to heat treatment at 194 °F at 95 percent humidity conditions to accelerate the full development of its strength and durability properties. However, this is not a requirement. Ambient curing of UHPC is also appropriate depending on the constraints set forth by the specific application. For example, the field-cast UHPC connections between the precast elements are not typically heat cured. More details about the curing conditions and its influence on UHPC material behavior are presented in the material properties section below.

The use of steel fibers in UHPC improves the material's ductility as well its tension capacity. In addition to the advantages realized from its superior mechanical and durability properties, with the use of super plasticizers in the mix design, UHPC displays a self-consolidating/self-leveling behavior, and this allows it to be placed in the plant and field conditions with little to no vibration, reducing construction costs.

The properties of UHPC suggest the potential to improve the overall economy of construction projects significantly. The high compressive strength of UHPC allows designers to select smaller sections for members, decreasing dead load on the structure and improving overall structural efficiency. UHPC also displays rapid early strength gain, which, along with its suitability for precast/prestressed applications, can contribute to reduced construction times. UHPC's appreciable tensile and shear capacity due to the inclusion of steel fibers may often lead to total or partial elimination of conventional mild steel reinforcement. Finally, the superior durability characteristics of UHPC should contribute to an increased service life and reduced maintenance costs compared to conventional concrete structures in nearly all applications. Therefore, in the current-day concrete technology, UHPC can arguably be considered a nearly ideal structural material. However, its use has not reached widespread acceptance in industry due to a lack of design guidelines and the cost of the material when compared to NSC.

For designers to accept and feel comfortable designing UHPC structures, there is a need to optimize structural shapes and to develop a comprehensive understanding of UHPC material behavior. Therefore, this guide draws upon previous research on UHPC material properties and provides recommendations for the use of UHPC in developing durable bridge decks.

UHPC in Federally Funded Projects

The use of UHPC in Federal-aid highway construction projects is subject to the Buy America provisions found in 23 U.S.C 313 and 23 C.F.R. 635.410. These provisions pertain to the

obligation of funds to a project wherein steel is used and require that the steel be manufactured in the United States. The FHWA's Buy America regulatory policy allows for a minimal use of foreign steel as defined in 23 CFR 635.410(b)(2). The policy also allows a waiver from the Buy America requirements where the requirements would be inconsistent with the public interest, or where domestic steel or iron products are not produced in sufficient and reasonably available quantities which are of satisfactory quality.

UHPC commonly includes steel fiber reinforcement that is subject to these provisions. As of May 2013, some steel fiber suppliers have expressed an interest in producing Buy America compliant steel fibers. These suppliers are working to develop and demonstrate the performance of fibers with the appropriate concrete manufacturers. If a State has a project involving the use of UHPC, the State should work with the concrete manufacturer to determine if there are any steel fiber suppliers who meet the material specifications. The steel fiber must be certified by the steel manufacturer that it complies with the Buy America requirements.

If a State determines that domestic steel fibers are not available, the State may determine if the quantities involved meet the minimal use provision which allows use of foreign steel if the total cost of all non-domestic steel used on a project falls below the threshold set within the regulations. If the quantities do not meet the minimal use provision, the State must submit a waiver request to FHWA's division office.

Material Properties

This section summarizes state-of-the-art research regarding the material behavior of UHPC under various loading conditions. In addition, recommendations for structural properties of UHPC suitable for usage in design practice are presented.

Compressive Strength

Compressive strength of the material is one of the critical parameters needed for design of concrete structures. The characteristic compressive strength of UHPC is defined in a similar fashion as defined for NSC, by its 28-day strength. The applicability of the standard ASTM compression testing method to evaluate the compressive behavior of UHPC has been studied by several researchers.[12,13] Based on this research, it was found that a standard ASTM test using 3-inch by 6-inch cylinders with appropriate surface preparation and at a load rate of 150 psi per second can be utilized for compression testing to determine the characteristic compressive strength of UHPC.[12]

UHPC has very high compressive strength compared to NSC or typical HPC used in current-day practice due to the high-density matrix and the absence of coarse aggregate. Based on the current research on UHPC, the characteristic 28-day compressive strength (f_c') of UHPC ranges from 18 to 33 ksi, depending on the type of curing process. (See references 12, 13, 14, and 15.)

A steam-cure treatment for 48 hours at a temperature of 194 °F is typically used to achieve the full compressive strength, especially in precast environments. An FHWA study completed on

more than 1,000 compression test samples showed that the average compression strength of UHPC from Lafarge North America is 18.3, 28, 24.8, and 24.8 ksi for air, steam, delayed steam, and tempered steam curing conditions, respectively.[12]

A recent study conducted by the Michigan DOT reported compressive strengths of 23.9 ksi and 30.5 ksi for air-cured and steam-cured specimens, which are higher compared to previous studies.[13] In addition, it was found that under steam-curing conditions, the characteristic strength of UHPC was reached after 3 days of casting (which included 2 days of steam curing). For air-cured specimens, the UHPC strength gradually increased with time, reaching strengths of 14 ksi and 19 ksi after 3 days and 7 days, respectively.

Furthermore, a recent FHWA study investigating the effects of curing temperature on compression behavior of non-steam-cured UHPC suitable for field-cast applications found that UHPC achieved a compressive strength of 22.5 ksi to 24.5 ksi at 28 days when curing temperatures of 50 °F, 73 °F, and 105 °F were used.[16]

Based on the summary of the above-mentioned studies and the compressive strength reported in real-world UHPC bridge projects (see references 7, 8, 9, 10, and 17), the following recommendations related to the compressive strength of UHPC are proposed:

Recommendations

- The compressive strength of UHPC depends on the curing conditions (air-cured, steam-cured, delayed steam-cured, etc.).
- The steam-cure treatment for 48 hours at 194 °F and 95 percent humidity accelerates the strength gain of UHPC. Hence, steam curing of UHPC products is encouraged when they are produced in precast plants.
- The characteristic compressive strength of UHPC shall be taken conservatively as 24 ksi at the end of curing for steam-cured conditions and 18 ksi at the age of 28 days for air-cured conditions.
- For steam-cured or heat-treated bridge elements, the compressive strength of UHPC can be taken to be equal to $f_c^{'}$ after 3 days from curing for capacity estimations. Therefore, these elements can be used without the 28-day waiting period, as is the case with conventional concretes.

Compressive Stress-Strain Behavior

The stress-strain behavior of the material is essential to estimate the neutral axis depth, reinforcement strains, and capacity at service and ultimate limit states. The compressive stress-strain behavior of UHPC was established in numerous concrete compressive cylinder tests conducted by several researchers and is shown in figure 1a. (See references 12, 13, 16, 18, and 19.)

The FHWA study notes that the strain value corresponding to the peak compressive strength is about 0.0035 and 0.0041 for air- and steam-cured specimens, respectively.[12,16] In addition,

unlike NSC, the measured stress-strain relationship for UHPC was found to be linear up to 80 to 90 percent of the peak stress for both curing conditions (see point A in figure 1a). However, according to Sritharan et al., heat-treated UHPC exhibited linear elastic behavior up to failure, corresponding to a compressive strain of 0.0032.[18]

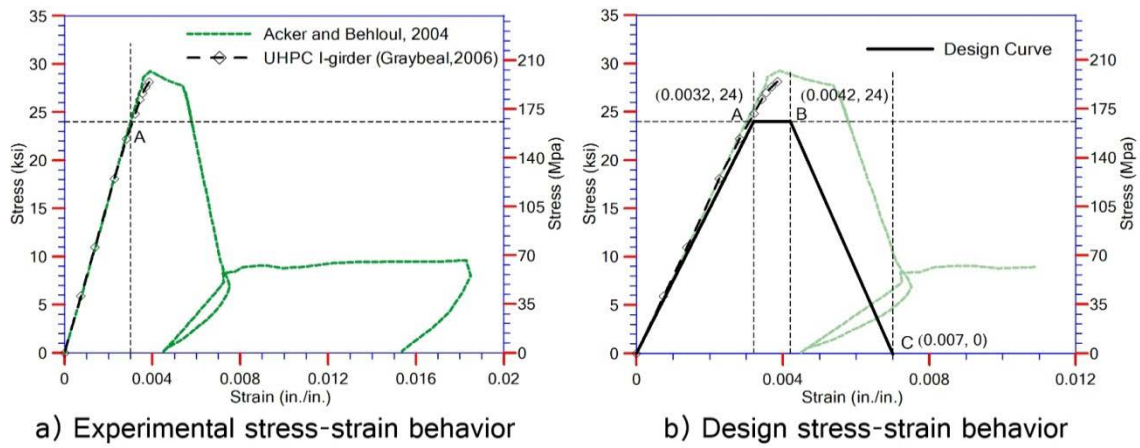

Figure 1. Graphs. Actual and recommended design stress-strain behavior of UHPC in compression.

The post-peak behavior of the UHPC is dependent on the volume percent of fibers in the mix and orientation of the fibers. Hence, for design purposes, the stress and strain values can be obtained by using appropriate safety factors on the observed values. Consistent with the French, Australian, and Japanese design recommendations for UHPC, the stress-strain curve shown in figure 1b is recommended for design.[20,21,22] The critical values in this figure are also consistent with some of the design guidelines proposed by Graybeal.[23]

Recommendations

- The stress-strain behavior of UHPC in compression shall be taken as a trilinear curve, as shown in figure 1b.
- In the absence of test data, for design purposes, the maximum compressive strain should be limited to 0.0032.

Tension Stress-Strain Behavior

The use of steel fibers results in dependable tension capacity for UHPC. Consequently, the tension capacity of UHPC can be utilized in design at ultimate limit state. This is in contrast to the design of members using normal concrete, where the concrete tension capacity is ignored after cracking. The tensile strength and post-cracking behavior of UHPC depends on the strength, quantity (e.g., volume by percentage), length, and orientation of steel fibers, which effectively prevent or delay opening of concentrated cracks. The tensile strength is also influenced by the type of curing treatment (steam- or air-cured) provided for UHPC members.

An investigation conducted by the FHWA examined four different methods to evaluate the tensile behavior of UHPC including the flexural prism test, split cylinder test, Mortar Briquette ("dog-bone") test, and direct tension test.[12] Although all four of the test methods provided realistic tensile cracking strengths, the results varied by 0.5 ksi depending on the test method. Therefore, the study conservatively recommended the cracking tensile strength of UHPC to be taken as 1.3 ksi and 0.9 ksi for steam-cured and untreated (i.e., air-cured) conditions, respectively.

As a follow-up to a series of compression and flexural tests, a set of direct tension tests were conducted on large steam-cured dog-bone specimens, which produced tension parameters comparable to those resulting from the FHWA study.[18] The tensile stress-strain behavior established from these dog-bone tests, which have been used successfully in characterizing the flexural response of a UHPC full-scale bridge girder, tapered H-shaped piles, and waffle deck panels, is shown in figure 2a.

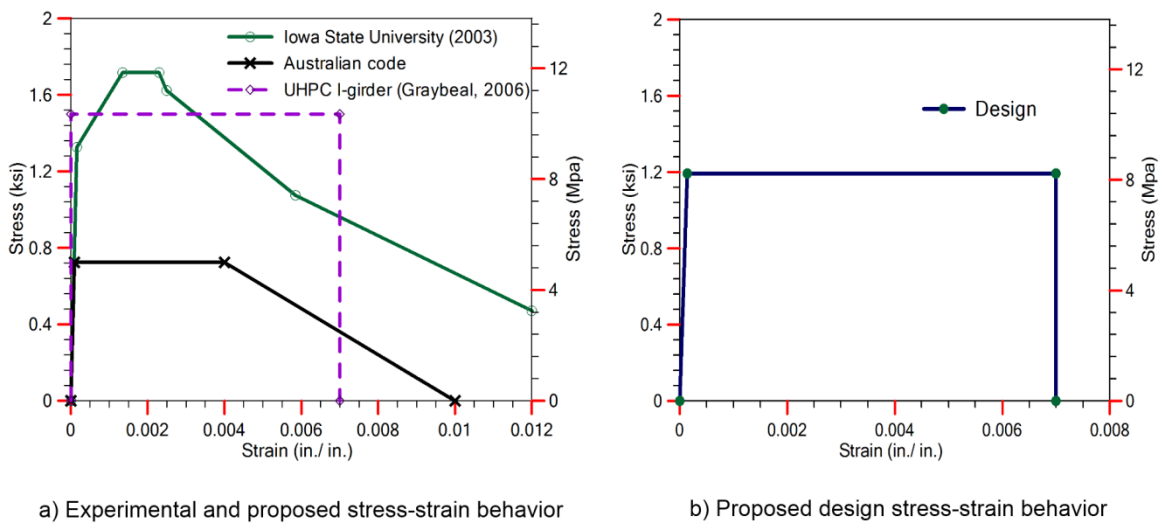

a) Experimental and proposed stress-strain behavior

b) Proposed design stress-strain behavior

Figure 2. Graphs. Measured and recommended design stress-strain behavior of UHPC in tension.

Based on the back analysis of large-scale UHPC I-girder tests under flexure and shear, Graybeal proposed a conservative approximation for the UHPC tensile stress-strain behavior for estimating the ultimate capacity of the UHPC sections.[23] Accordingly, UHPC under tension can be assumed to behave in an elastic-perfectly plastic fashion with a post-cracking capacity of 1.5 ksi for strains below the pullout strain of 0.007 (see figure 2a)

In a recent study on tension behavior of UHPC, Graybeal and Baby used a direct tension test method using dog-bone shaped test specimens of different sizes.[24] These tests characterized the tension behavior of the UHPC for different curing conditions and steel fiber quantities. This study noted that the tensile response of UHPC consists of the following four phases: elastic behavior, inelastic cracking, straining in discrete cracks, and single crack localization. Results from these tests also confirmed that the tensile response of UHPC can be represented with an elastic-perfectly plastic response for design purposes as suggested in figure 2b.

When comparing the different studies, variations in the post-cracking behavior of the UHPC can be noted, which is influenced by the dispersion and orientation of the fibers in the test specimens and, most importantly, by the location and length of gauges and how the strain was characterized if measured over a long gauge length. In consideration of the reported experimental responses and recommendations including those adopted by others, the tension model as shown in figure 2b is recommended for use in the design of precast waffle deck systems. The recommended model is motivated by maintaining simplicity and achieving satisfactory characterization for the waffle deck panels at the serviceability and ultimate limit states.

Recommendation

- The stress-strain behavior of UHPC in tension shall be taken as a bilinear curve as shown in figure 2b.

Modulus of Elasticity

UHPC displays linear elastic behavior in both compression and tension up to certain strain limits, as was shown in figure 1. Tests by Bonneau et al. showed the elastic modulus of UHPC without fibers is 6,700 ksi compared to 7,100 ksi with a 2.0 percent steel fiber content, an increase of only about 6.5 percent due to the presence of fibers.[25] According to Graybeal, standard heat treatment increases the elastic modulus of UHPC by 23 percent from 6,200 ksi to 7,650 ksi.[12]

Many equations have been used to define the relationship between the elastic modulus and the compressive strength of concrete. The following equations have been developed specifically for UHPC based on the available experimental data:[17,18,20]

$$E(\text{psi}) = 50,000\sqrt{f_c^{'}}\,(\text{psi}) \qquad \text{(Sritharan et al. 2003)}$$

$$E(\text{psi}) = 46,200\sqrt{f_c^{'}}\,(\text{psi}) \qquad \text{(Graybeal 2007)}$$

$$E(\text{psi}) = 262,000\sqrt[3]{f_c^{'}}\,(\text{psi}) \qquad \text{(AFGC 2002)}$$

The comparison of these equations with the experimental data is shown in figure 3. It is clear from the figure that the equation proposed by Graybeal predicts the Young's modulus more accurately than other equations.[12]

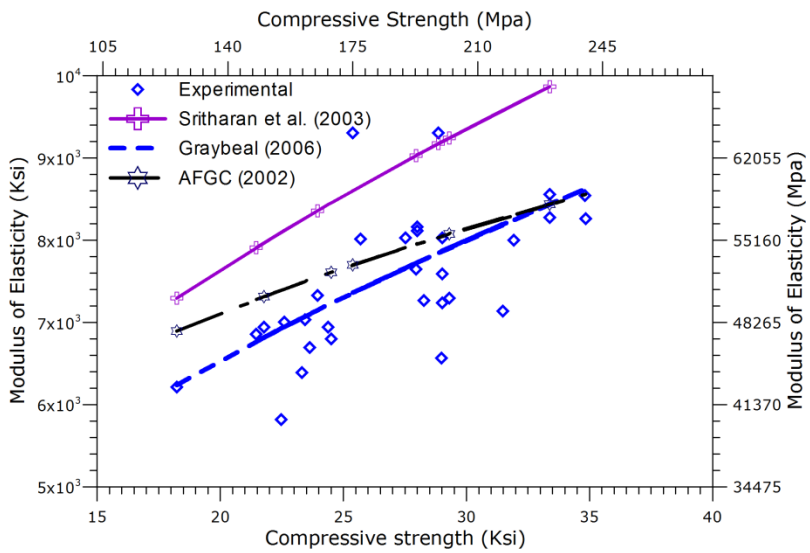

Figure 3. Graph. Comparison of various equations suggested for elastic modulus of UHPC with measured experimental data.

Recommendation

- The elastic modulus of UHPC can be obtained using $46{,}200\sqrt{f_c^{'}}$ (psi). In the absence of exact concrete strength, a value of 7,500 ksi can be used for design purposes.

Density

The density of UHPC is slightly higher than that of HPC or NSC due to its very compact microstructure. The average reported value for the density of UHPC mixes from 17 published mix descriptions was approximately 157 lb/ft^3.[26] A unit density of 155 lb/ft^3 was suggested by studies done in the US.[12,13]

Recommendation

- The unit weight of the UHPC shall be assumed to be 157 lb/ft^3 for dead load estimations.

Coefficient of Thermal Expansion

UHPC tends to exhibit a higher coefficient of thermal expansion (CTE) than NSC. This may be attributed to the fact that UHPC contains a comparatively high volume of cementitious materials (relatively high CTE) without any coarse aggregate (low CTE values). The FHWA and Michigan DOT studies recommended a value of about 8.2 x 10^{-6}/°F for CTE.[12,13] The Michigan study found that this value can be used regardless of the age of the concrete once thermal treatment has been completed. For comparative purposes, the expected CTE for NSC is about 6.0 x 10^{-6}/°F and for HPC is between 4.0 – 7.3 10^{-6}/°F.[27,28]

Recommendation

- For thermally treated UHPC, a CTE value of 8.2 x 10^{-6}/°F is recommended for design.

Chloride Penetration Resistance

Concrete degradation in bridge decks is accelerated by the penetration of chloride ions from deicing agents into the concrete from the top, leading to the corrosion of the reinforcement. Therefore, chloride ion penetration resistance is one of the critical parameters that dictate the durability of a system and concrete cover requirement for reinforcement. UHPC exhibits very low to negligible permeability when compared to NSC due to its high-density matrix and low water/cement ratio. The ASTM C1202 standard, commonly known as the rapid chloride ion penetrability test, can be used to estimate the chloride resistance of UHPC.

In the study by Graybeal, the chloride penetration resistance of specimens receiving any of the four curing regimes at 56 days and those receiving any form of heat treatment at 28 days achieved a Negligible rating (< 100 coulombs).[12] Only untreated specimens at 28 days did not receive this rating; those specimens averaged passing 360 coulombs of charge, resulting in a Very Low permeability qualification. Similarly, Michigan DOT reported negligible chloride penetrability for all specimens tested in their study.[13]

Graybeal used another test procedure, known as the chloride ponding test, to determine the level of migration of chloride ions into the UHPC over 90 days.[12] According to these findings, the chloride ion content was extremely low for all curing regimes. The average chloride content for different curing regimes was less than 0.00312 lb/ft^3 and, in most cases, the average was 0.00125 lb/ft^3. All of these values are below the minimum accuracy threshold for the test method, indicating that the volume of chlorides that penetrated into the UHPC is extremely low.

A summary of average values of various durability parameters for UHPC, HPC, and NSC is presented in table 2. In addition, the durability properties of UHPC, HPC, and NSC are compared in graphical form in figure 4.

Table 2. Durability properties of UHPC compared to HPC and NSC.

Parameter	UHPC	HPC		Normal Concrete	
		Value	Ratio to UHPC	Value	Ratio to UHPC
Salt Scaling Mass Lost (28 cycles)	0.010 lb/ft^2	0.031 lb/ft^2	3.0	0.31 lb/ft^2	30
Chloride Ion Diffusion Coefficient	2.2×10^{-13} ft^2/s	6.5×10^{-12} ft^2/s	30	1.2×10^{-11} ft^2/s	55
Chloride Ion Penetration Depth	0.04 in.	0.32 in.	8	0.91 in.	23
Chloride Ion Permeability Total Charge Passed	10 – 25 coulombs	200 – 1000 coulombs	34	1800 – 6000 coulombs	220
Carbonation Depth (3 years)	0.059 in.	0.16 in.	2.7	0.28 in.	4.7
Reinforcement Corrosion Rate	4×10^{-7} in./yr	9.8×10^{-6} in./yr	25	4.7×10^{-5} in./yr	120
Abrasion Resistance Relative Vol. Loss Index	1.1 – 1.7	2.8	2.0	4.0	2.9
Resistivity	53.9 kΩ·in.	37.8 kΩ·in.	0.70	6.3 kΩ·in.	0.12

Compiled based on data presented in references 11, 14, 29, 30, 31, 32, 33, and 34.

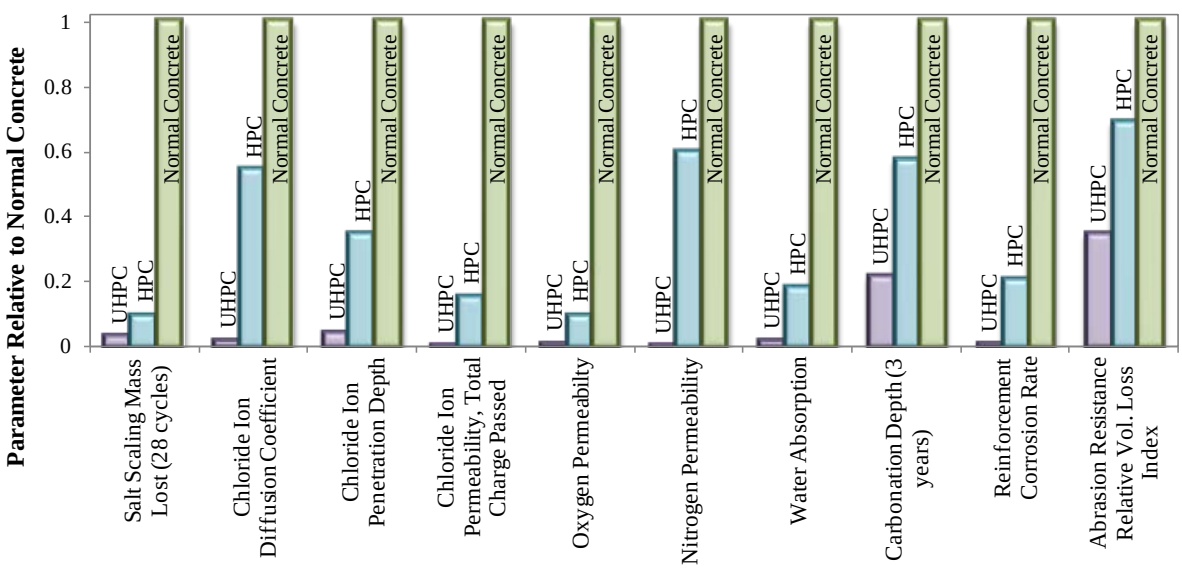

Figure 4. Chart. Durability properties of UHPC and HPC with respect to normal concrete (lowest values identify the most favorable material.[26])

Recommendations

- For precast UHPC deck panels, the chloride penetration resistance can be assumed to be 100 coulombs (negligible).
- For the deck panel connections, which are not typically heat-treated, the chloride penetration resistance can be assumed to be 400 coulombs (very low).

Concrete Cover and Spacing

Concrete cover is the distance from the surface of the concrete to the surface of the reinforcing bars and strands embedded in the concrete. Ensuring sufficient concrete cover is critical not only for the durability of concrete structures but also for the development of the bond strength along the primary reinforcement. Concrete cover requirements depend on environmental conditions and the chloride penetration resistance of the concrete used for design. Recognizing UHPC's high resistance to chloride penetration, several international codes for UHPC, Gowripalan and Gilbert recommended a decreased concrete cover.[21] The Japan Society of Civil Engineers (JSCE) and the Australian code for UHPC require a minimum of 0.75 inches of concrete cover for uncoated reinforcement.[21,22]

Research by Tuchlinski et al. suggested that the UHPC cover for prestressing strands designed to develop the full strength of the strand may be reduced compared to normal concrete.[35] Based on their research, Tuchlinski et al. recommended a concrete cover of 1.5 times the strand diameter for UHPC to ensure that the full strength of the strand can be developed. In addition, a clear cover of 0.84 inches was used successfully on 0.6-inch-diameter strands in full-scale UHPC bridge girder tests at Iowa State University (ISU).[9]

The Tuchlinski et al. research also recommended center-to-center spacing for prestressing strands in UHPC to be at least 3.0 times the nominal strand diameter.[35] For research completed at ISU, a clear spacing of 3.3 to 4 times the strand diameter has been used successfully.[9,26] Based on experience, a local precaster recommended that a minimum spacing of at least 1.5 inches should be used to ensure flow of UHPC freely through the section during casting.

Recommendations

- The minimum concrete cover for unprotected mild reinforcement in UHPC shall be 0.75 inches.
- The minimum cover concrete for prestressing strands shall be 1.5 times the strand diameter.
- The reinforcement including strands shall be designed with a minimum clear spacing equal to 3.25 times the diameter of the reinforcement or 1.5 inches, whichever is greater.
- Unlike the current American Association of State Highway and Transportation Officials (AASHTO) requirements, for decks exposed to tire studs or chain wear, there is no need to increase the cover requirement for UHPC because the abrasion resistance of the UHPC is significantly higher than that of NSC.

Bond Strength

The bond between UHPC and reinforcement (rebar or strand) is important in determining development and transfer lengths. Given that UHPC has such drastically different mechanical properties from conventional concrete, the use of the current AASHTO guidelines is conservative.

In a recent study by the FHWA, the development length of mild steel reinforcement embedded into UHPC was investigated through a series of tensile pullout tests on #4, #5, and #6 bars cast into 16-inch-diameter UHPC cylinders.[36] It was found that embedment lengths of 2.9 inches (= $5.8d_{b\ \#4}$), 3.9 inches (= $6.24d_{b\#5}$), and 4.9 inches (= $6.53d_{b\#6}$) were sufficient to fracture the #4, #5, and #6 bars, respectively. Thus, to develop the yielding of the mild steel reinforcement (f_y = 60,000 psi), the embedded length required is about two-thirds of the measured values.

With the limited data available, the anchorage length required for mild steel reinforcement to develop its yield strength in UHPC can be assumed to be $6d_b$ (d_b = diameter of reinforcement) at the minimum. While further research is needed to fully characterize anchorage behavior of reinforcement in UHPC and take into account the effect of fatigue loading on the bond development length, the completed system test suggests that meeting the recommended minimum anchorage length is expected to provide sufficient anchorage of reinforcement in waffle deck systems.

Recommendations

- The development length required for mild steel reinforcement in waffle deck systems to develop its yield strength in UHPC shall be no less than $6d_b$, where d_b is the diameter of the reinforcement in inches.
- The development length required for mild steel reinforcement in waffle deck systems to develop its ultimate strength in UHPC shall be no less than $9d_b$.

Shrinkage Behavior

UHPC exhibits relatively large shrinkage behavior in comparison to normal concrete due to high cementitious material content; it is therefore more susceptible to cracking under restrained conditions. A study by Graybeal found that UHPC exhibited rapidly occurring, large-value, early-age shrinkage strains.[12] The shrinkage strains in heat-treated UHPC were nearly 850 microstrains during the curing period. Untreated UHPC also exhibited shrinkage strains beyond 790 microstrains.

Although the shrinkage strain in UHPC is higher than in NSC, shrinkage in UHPC takes places at an early age. In fact, heat-treated UHPC does not exhibit any shrinkage in the post-treatment period. In the absence of treatment, specimens reached 95 percent of ultimate shrinkage at the age of 2 months.[12]

UHPC will crack in tension at strains lower than these shrinkages (see tensile behavior), and it is therefore important to mitigate or eliminate shrinkage restraints in UHPC structural members during casting.

Recommendations

- For heat-treated UHPC, the shrinkage strain can be taken as 850 microstrains during the curing period and zero microstrains after the heat treatment.

- For untreated UHPC, shrinkage strains up to 850 microstrains will develop over a period of 60 days.

Poisson's Ratio

In the recent study by Michigan DOT, the Poisson's ratio for UHPC under all curing conditions and ages was found to be consistently between 0.20 and 0.21, which is in line with typical concrete and the value given by the Association Française de Génie Civil.[13,20] Although a value as low as 0.13 was reported in the literature, the higher values have been reported consistently in other research as well.[26,37]

Recommendation

- The Poisson's ratio for UHPC material shall be taken as 0.20.

SYSTEM CONFIGURATION AND BENEFITS

Similar to the typical full-depth precast deck systems used in current practice and developed in previous research, the waffle deck system consists of a series of UHPC waffle deck panels that are full-depth in thickness (as required by the structural design) and connected to the supporting girders with robust and efficient connections. More details about the connections are presented in chapter 3. The UHPC waffle deck panel system consists of the following (see figure 5):

- Precast UHPC waffle panels with shear pockets to accommodate the shear connections between the waffle panels and supporting girders.
- Transverse panel-to-panel connections that connect two adjacent waffle deck panels forming a joint parallel to the bridge transverse axis.
- Longitudinal panel-to-girder connections that connect the waffle deck panel and the center girder of a specific bridge (joint will be present when the deck panel lengths are less than the full width of the bridge and the joint will run parallel to the bridge longitudinal axis).
- Some type of overlay (e.g., asphalt) may be used to improve the pavement rideability as needed by the specific requirements from the owner.
- In situ UHPC material used to fill the panel-to-panel connections and shear pockets in the field.

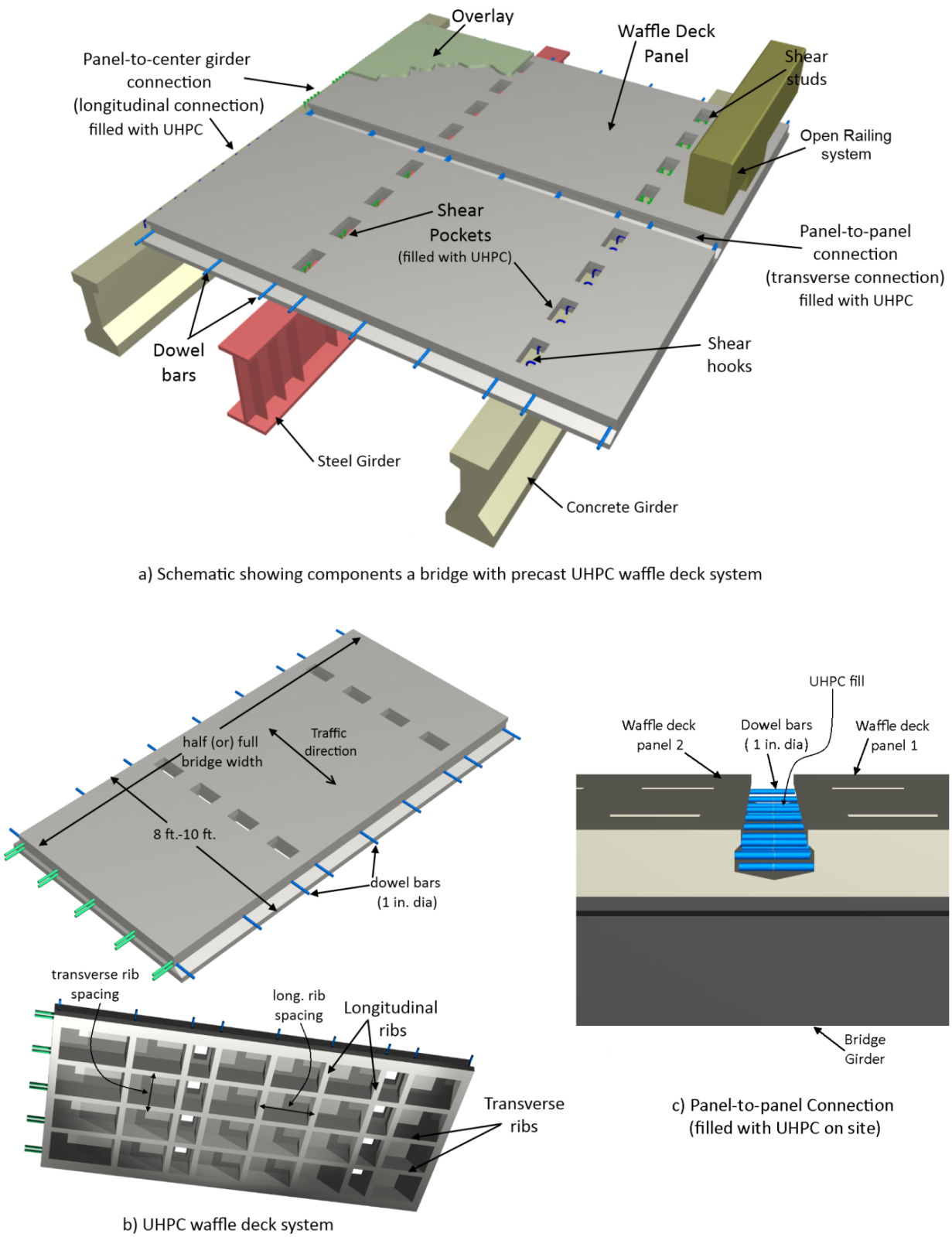

Figure 5. Diagrams. Schematic of UHPC waffle deck system.

A UHPC waffle deck panel consists of a slab cast integrally with concrete ribs spanning in transverse and longitudinal directions. This system is similar to the two-way joist system used in the building industry.

A transverse strip along the deck panel acts a T-beam, distributing wheel load effects to the adjacent bridge girders. The longitudinal ribs help in distributing the wheel load to the adjacent panels through the panel-to-panel connections. The reinforcement needed to resist the wheel loads is provided in the ribs along both directions. The spacing of the ribs in both directions is determined based on the girder-to-girder spacing, panel dimensions, and minimum detailing requirements for panel-to-panel connections. Additional details about the spacing and reinforcement of the panel are presented in chapter 2.

Due to the excellent structural properties of UHPC, the waffle deck system for a given thickness has the same or higher capacity and is 30 to 40 percent lighter than a comparable solid precast full-depth panel made of NSC. The decreased weight of the UHPC panel has significant benefits. For example, it can increase the span length and girder spacing, improve bridge ratings when used for deck replacement projects, and reduce seismic, substructure, and foundation loads when compared to solid precast deck panel systems. The presence of the steel fibers in UHPC and very minimal shrinkage of UHPC after steam curing of the precast elements decreases the reinforcement requirements.

The panels can be designed to act as composite or non-composite with the supporting girders. However, to improve structural efficiency and cost-effectiveness, it is recommended to design the UHPC waffle deck system to act compositely with the girders for resisting design loads. The length and width of the deck panels are typically determined by specific bridge geometry, type of bridge (concrete or steel girder), and transportation/handling limitations. Based on the current practice, the width of the panels (length in the direction of traffic or short dimension of the panel) may be varied between 8 and 12 ft.

EXPERIMENTAL AND FIELD TESTING WAFFLE DECK SYSTEM

This section presents a summary of the laboratory testing done to evaluate the structural performance of the waffle deck panel and connections designed for a 60-ft-long replacement bridge in Wapello County, Iowa. With experimental verification of the structural behavior in the laboratory completed, the UHPC waffle deck system was implemented in the replacement bridge project for the first time in the US. The observations from the field testing of the bridge are also summarized in this section.

Laboratory Testing

Based on the previous research completed at the FHWA on structural behavior of a prestressed UHPC waffle deck system, a UHPC precast waffle deck system with conventional mild steel reinforcement was developed by the Iowa DOT and ISU for ABC purposes.[17] The UHPC waffle deck panel was designed for a two-lane, single-span replacement bridge in Wapello

County, Iowa. Figure 6 shows the cross-section details for the bridge. A full set of design drawings is provided in the project final report.[38]

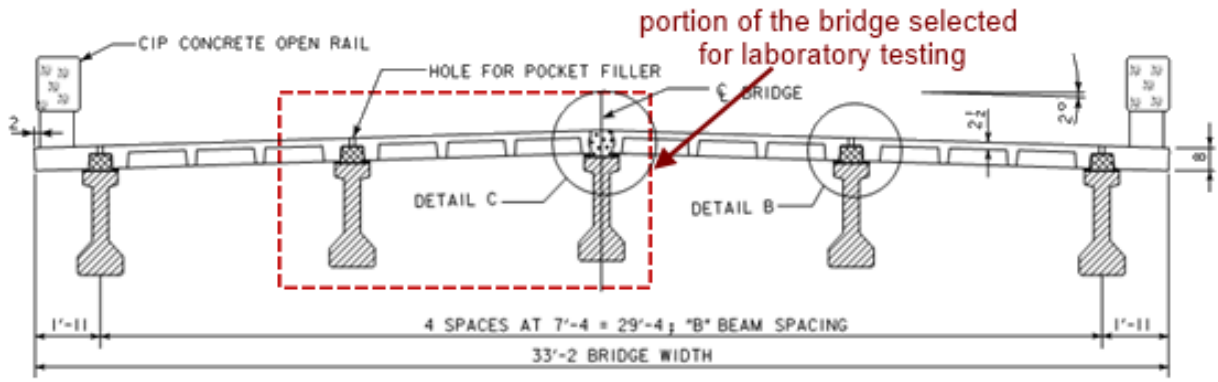

Figure 6. Diagram. Cross-section details of the replacement bridge with UHPC waffle deck system in Wapello County, Iowa.

The waffle deck panel was 8 inches thick and was designed to resist current AASHTO load requirements. This resulted in Grade 60 #6 (d_b = 0.75-in., where d_b is diameter of the bar) and #7 (d_b = 0.875-in.) mild steel reinforcement as top and bottom reinforcement, respectively. All of the reinforcement was provided along panel ribs in both directions. The plan view of the waffle deck panel showing the reinforcement and rib spacing is shown in figure 7a. More detailed information regarding the cross-section and reinforcement locations is presented in chapter 2 and in Aaleti et al.[39]

To make the UHPC waffle deck panels fully composite with the prestressed concrete girders, three different connections were utilized: shear pocket connection, longitudinal connection, and transverse connection. The shear pocket connection consists of a shear hook from the girder extended into a shear pocket in the waffle deck panel, with the shear pocket filled with in situ UHPC (figure 7b).

The longitudinal connection between the waffle panel and girder was formed by tying dowel bars from the panels with shear hooks from the girder, using additional longitudinal reinforcement, and then filling with in situ UHPC (figure 7c).The transverse connection between the UHPC waffle deck panels contained dowel bars from the panels tied to additional transverse reinforcement, with the gap between the panels filled with in situ UHPC (figure 7d).

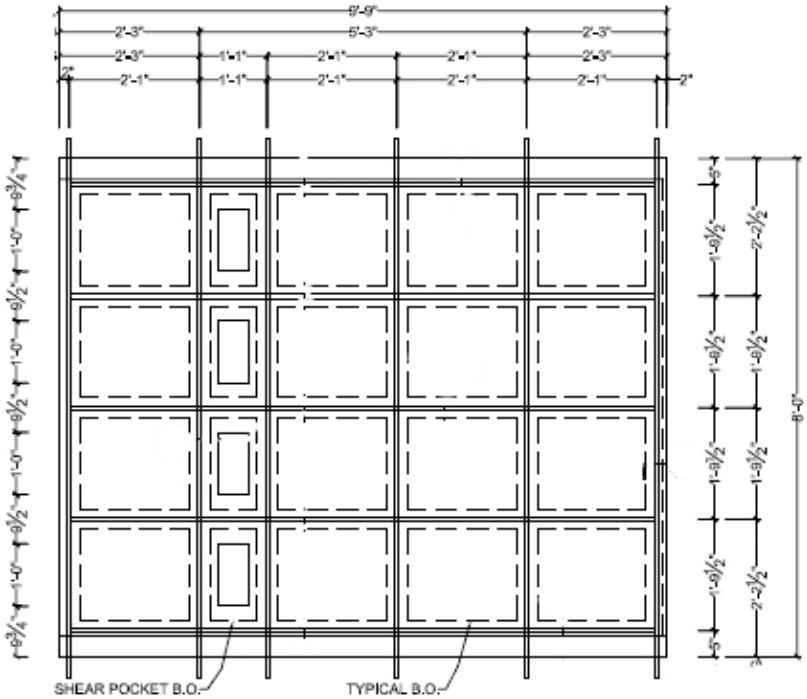

a) Plan view details of the waffle deck panel (8 ft x 10 ft) used for experimental testing

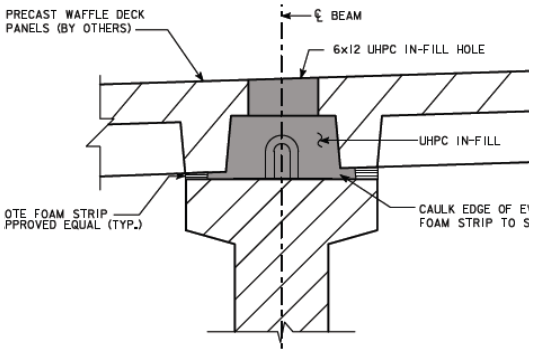

b) Shear pocket connection

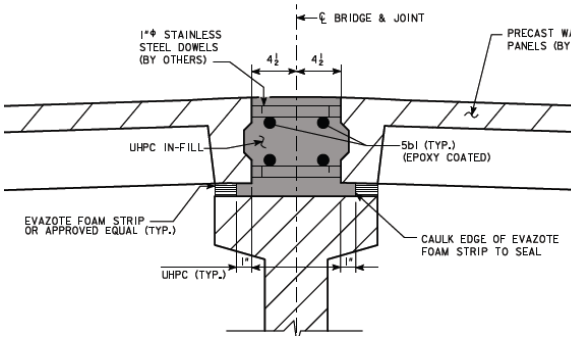

c) Longitudinal connection

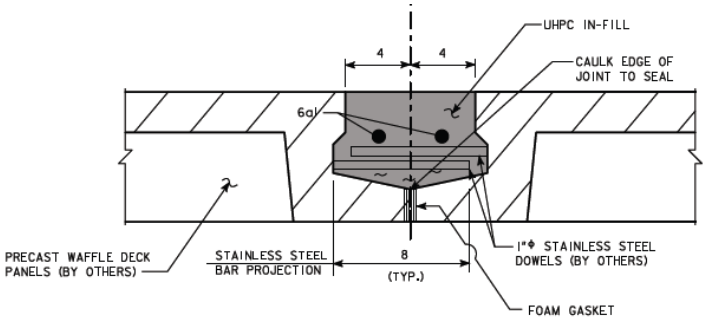

d) Transverse connection

Figure 7. Diagrams. Connection details used for the UHPC waffle deck system.

Test Setup and Instrumentation

For the experimental investigation, a waffle deck region between two adjacent girders, as identified in figure 6, was chosen. Two waffle deck panels (UWP1 and UWP2), 8 ft long by 9 ft, 9 in. wide, were fabricated using a commercially available, standard UHPC mix from Lafarge North America. The waffle deck panels were cast upside-down for ease of construction. The details about the construction of waffle panels are presented in Aaleti et al.[40] The setup used for the UHPC waffle deck system test was designed to replicate the critical regions of the field structure closely and is shown in figure 8.

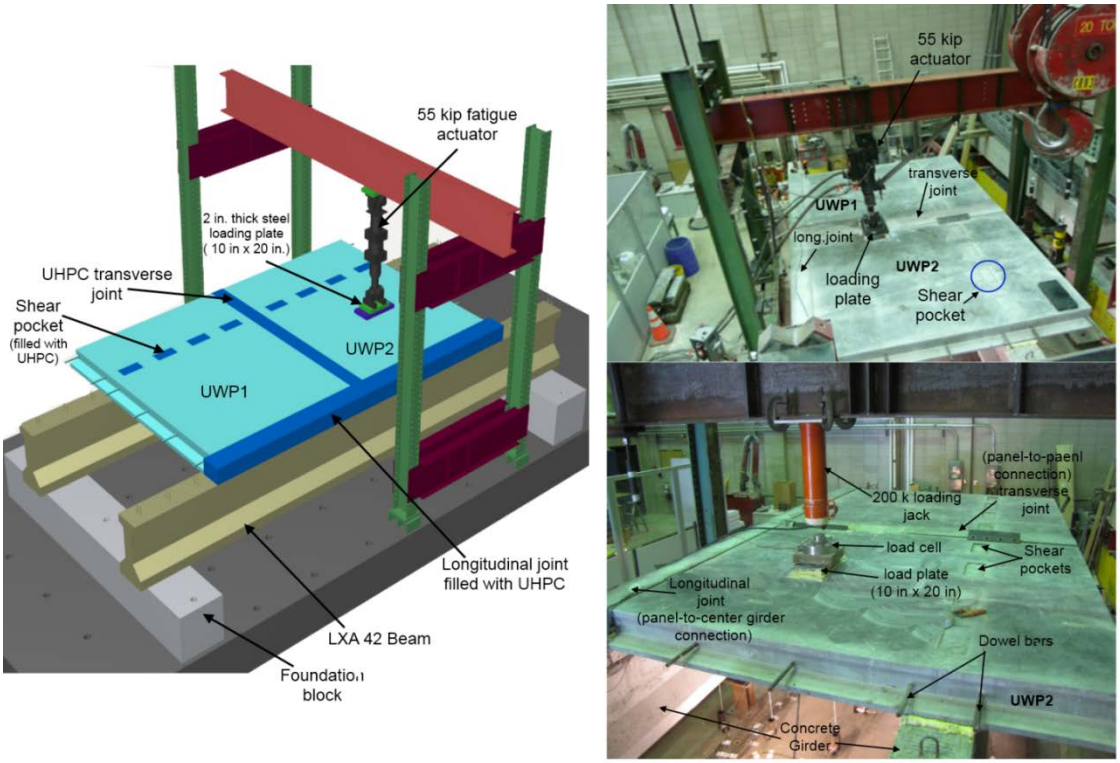

a) Schematic of laboratory test setup

b) Completed view of UHPC joints and test setup for service and ultimate load tests

Figure 8. Diagram and photos. Schematic of the test setup used for testing of the UHPC waffle deck panel system.

The UHPC deck panels were supported on two 24-ft-long prestressed concrete girders, which were 7 ft, 4 in. apart and simply supported at the ends on concrete foundation blocks. The connections between the two deck panels, as well as those between the panels and the girders, were then cast using UHPC mixed in the laboratory at ISU.

Several string potentiometers and strain gauges were used to monitor the performance of the waffle deck system during testing. The instrumentation details are shown in figure 9. A 10-inch by 20-inch steel plate attached at the loading end of a ±55 kip fatigue hydraulic actuator was used to simulate a truck wheel load on the panel.

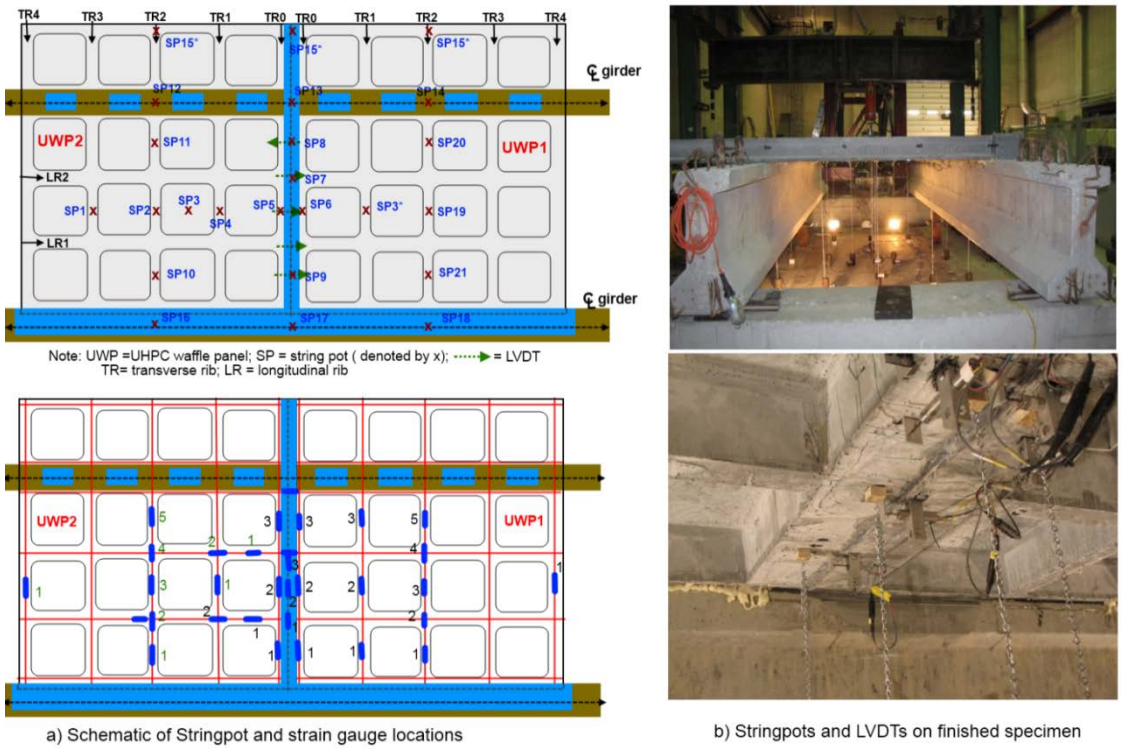

Figure 9. Diagrams and photos. Schematic of the displacement and strain gauges in the test unit.

Summary of Experimental Results

The performance of the UHPC waffle deck system, including the UHPC in situ connections between precast elements, was examined using nine different tests and a single-wheel truck load simulated using a hydraulic actuator. The following two different locations were chosen to apply the load along the centerline between the two girders: center of the deck panel and center of the panel-to-panel transverse joint. The details of the completed load tests are summarized in table 3.

Table 3. Sequence and details of the tests conducted on the waffle deck system.

Test	Test Description	Location	Maximum Load
1	Service load test panel-2 (UWP2)	Center of the panel	1.33[a] x 16 k = 21.3 k
2	Service load test on transverse joint	Center of the joint	1.75[b] x 16 k = 28 k
3	Fatigue test on the transverse joint	Center of the joint	28 k (1 mil cycles)
4	Overload test of transverse joint	Center of the joint	48 kips
5	Fatigue test on the panel-1 (UWP1)	Center of the panel	21.3 k (1mil cycles)
6	Overload test of the panel	Center of the panel	40 kips
7	Ultimate load test on panel UWP1	Center of the panel	160 kips
8	Ultimate load test on the transverse joint	Center of the joint	155 kips
9	Punching shear failure test on UWP1	Between transverse ribs	155 kips

This section focuses only on the results from service load tests and ultimate load tests, while the results and observations from the overload tests and fatigue tests are presented in Aaleti et al.[40]

Panel and Joint Service Load Tests

In the panel service load test, a maximum load of 21.3 kips, representing the AASHTO truck service load plus 33 percent impact, was applied at the center of panel UWP2 (at rib TR2 and between the girders, see figure 9). In the joint service load test, a maximum load of 28 kips, approximately representing the AASHTO truck service load plus 75 percent impact, was applied at the center of the transverse joint. The load-deflection curves for both cases are shown in figure 10. In both cases, a linear relationship was observed between the load and deflection. Maximum deflections of 0.034 inches and 0.022 inches were measured during the panel and joint service load tests, respectively.

The peak strain recorded in the bottom reinforcement of the center rib, running in the transverse direction, during the panel service load test was only 375 microstrains, or 18 percent of the yield strain. The strain variation along the length of the bottom reinforcement, in the transverse rib TR2 of panel UWP2, and the variation of normalized bottom reinforcement strains at the center of the transverse ribs at the peak load are shown in figure 11a.

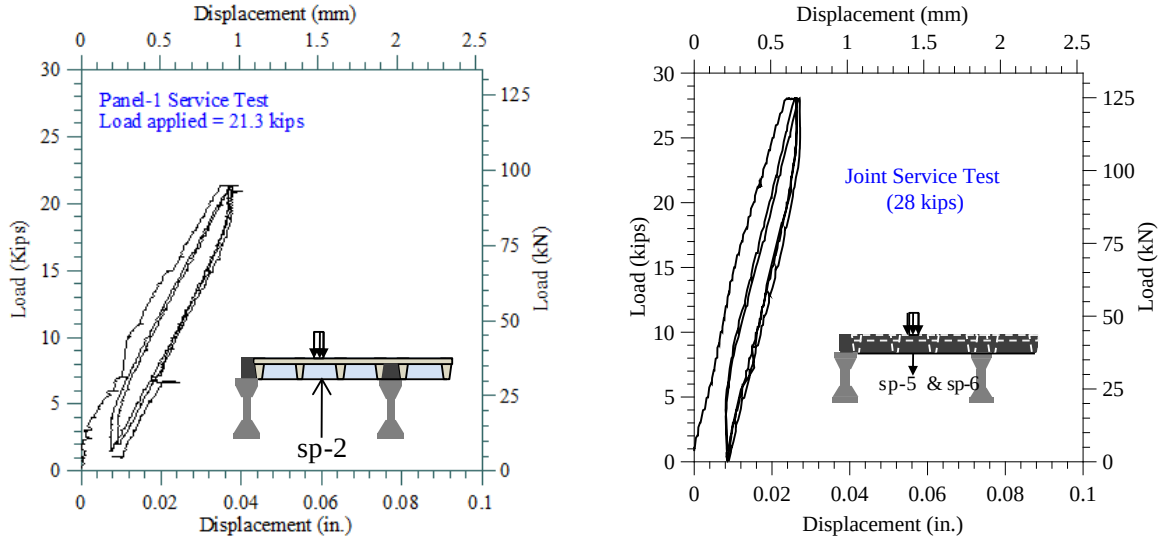

a) Force versus displacement in panel service load test

b) Force versus displacement in joint service load test

Figure 10. Graphs. Measured force-displacement response at the center of the waffle deck panel and the transverse panel-to-panel joint under service loads.

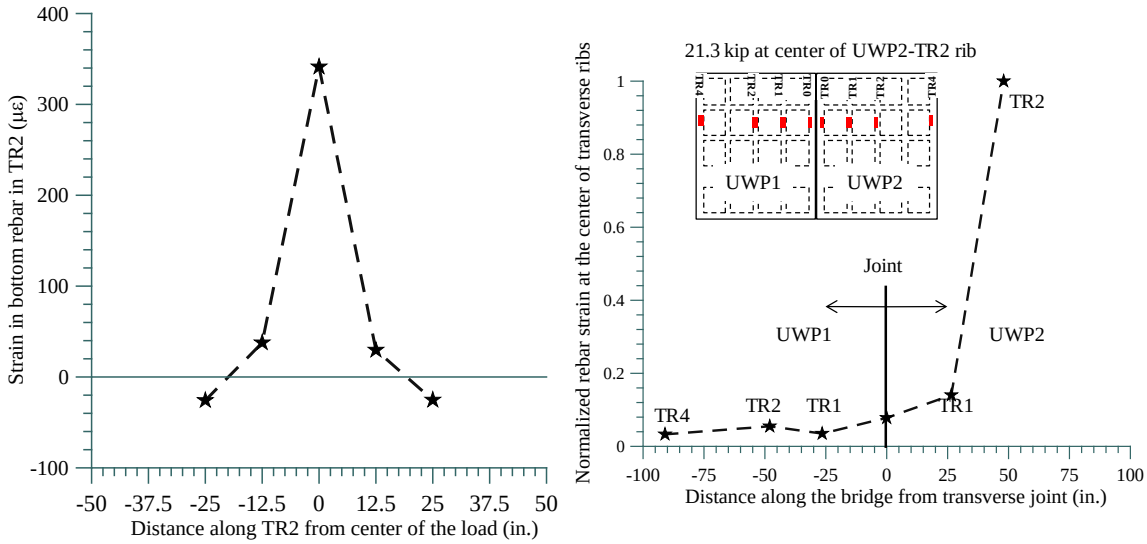

a) Strain distribution in the bottom rebar in transverse rib TR2 at 21.3 kips **b) Bottom reinforcement strains at the center of transverse ribs**

Figure 11. Graphs. Measured strain distribution along the transverse rib in the center of the panel and normalized strains at the center of the transverse ribs along the longitudinal direction under service load conditions.

Figure 11b illustrates that, for an applied load P at the center of the panel, the transverse rib TR2 provides 70 percent of the resistance. The adjacent ribs on either side of TR2 (i.e., TR1 and TR0, and TR3 and TR4) provide 10 percent and 5 percent of total resistance, respectively.

Panel Ultimate Load Test

The ultimate load test was carried out to investigate the adequacy of the precast deck system and its connections under ultimate load conditions. The ultimate load referred to in this study was arrived at based on the recommendations from Iowa DOT personnel. A total load of 160 kips, equivalent to 10 times the AASHTO truck service load, was applied at the center of panel UWP1. The load-deflection curve established at the center of this panel during testing is shown in figure 12.

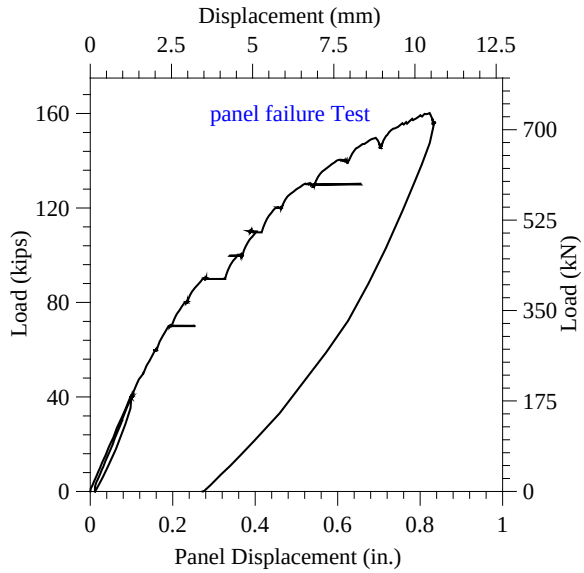

Figure 12. Graph. Measured force-displacement response of waffle deck system.

The panel exhibited a linear force-displacement behavior response up to 80 kips. A maximum deflection of 0.82 inches was measured at the center of panel UWP1 (i.e., at the center of transverse rib TR2). The peak strain measured in the bottom reinforcement of transverse rib TR2 was about 1600 microstrain, which was about 76 percent of the yield strain of the reinforcement. A significant amount of cracking was observed on all of the transverse ribs (TR1, TR2, and TR3) and both of the longitudinal ribs (LR1 and LR2) of panel UWP1. The maximum crack width measured along the transverse rib TR2 in UWP1 was 0.08 inches.

Joint Ultimate Load Test

A total load of 155 kips, equivalent to about 10 times the AASHTO truck service load, was applied at the center of the transverse joint. The load-deflection curve established at the center of the panel-to-panel joint is shown in figure 13a. The peak strain measured in the bottom reinforcement of transverse rib TR2 was about 1475 microstrain, or about 70 percent of the yield strain of the reinforcement. At the end of the test, a large number of cracks were formed in transverse ribs of the joint (see figure 13b). The maximum load applied was controlled by the shear cracking initiation in the prestressed girders.

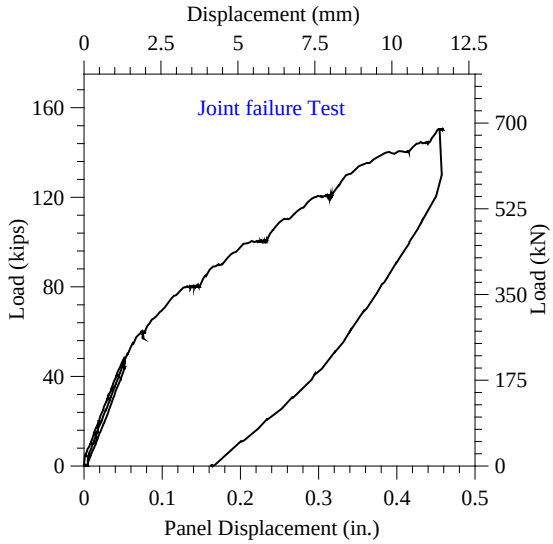

a) Force-displacement response

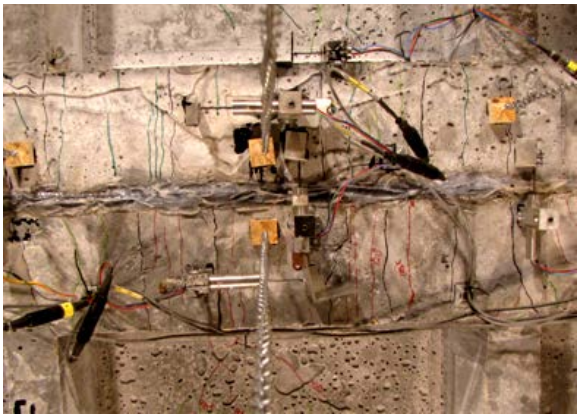

b) Cracks in the transverse joint at 150 kip load

Figure 13. Graph and photo. Measured force-displacement response and cracking at the center of the panel-to-panel joint under ultimate loads.

Punching Shear Failure Test

In this test, a wheel load was applied at the center of the waffle deck cell bounded by transverse and longitudinal ribs TR2, TR3, LR1, and LR2. Load was applied at increments of 5 kips on the waffle deck panel using a 200-kip actuator. The 10-inch by 20-inch plate at the loading end of the actuator was replaced with a 6-inch by 8-inch steel plate to force punching shear failure in a region bounded by the ribs in the panel.

As the loading increased, a large number of radial cracks in the top surface and flexural cracks in the ribs were formed. The measured load-displacement response at the center of the cell is shown in figure 14a. The crack pattern on the bottom surface of the waffle deck was as expected for a typical punching shear failure and is shown in figure 14b. The waffle deck failed suddenly at a maximum load of 154.6 kips, leaving a 6-inch by 8-inch hole (the same size as the steel plate placed at the top of the deck) on the top surface at the center of cell. The punching shear failure surface had edges sloped at approximately 45 degrees, as shown in figure 14c. The measured average punching shear strength was about 1.068 ksi, which is equivalent to $6.62\sqrt{f_c'}$(psi). The measured punching shear failure capacity is nearly 2.3 times the estimated value using the equation recommended by Harris and Roberts-Wollmann.[41]

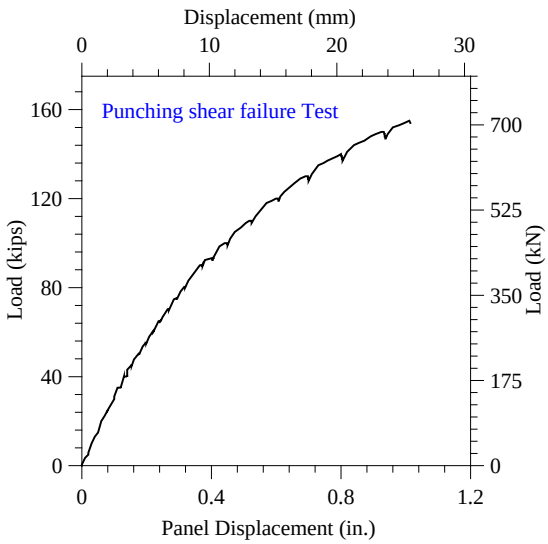

a) Load-displacement response

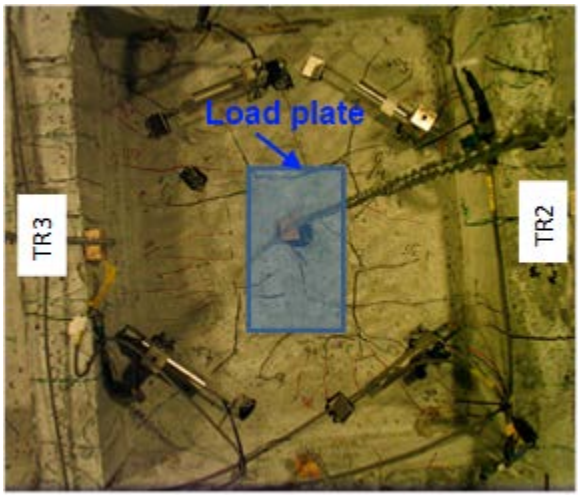

b) Crack pattern in the cell

c) Punching failure surface

Figure 14. Graph and photos. Measured load-displacement behavior and failure surface during the punching shear failure test of waffle deck system.

Field Testing

The constructability of the UHPC waffle deck system and structural performance of its critical connections and panels were investigated under service, fatigue, and ultimate loads using large-scale laboratory tests as described in the previous section. The results and observations from the laboratory tests were used to design the demonstration bridge on Dahlonega Road in Wapello County, Iowa.

This bridge replacement project was used to demonstrate the deployment of the UHPC waffle deck panel technology from fabrication through construction and to evaluate the performance of the UHPC waffle slab deck under true service conditions. The Dahlonega Road Bridge over Little Cedar Creek was opened to traffic in November 2011 and was field tested in February 2012.

For the field evaluation of the bridge system, live load was applied by driving a heavily loaded, standard dump truck across the bridge along predetermined paths. The total weight of the truck was 60,200 lb, with a front axle weight of 18,150 lb and two rear axles weighing roughly 21,000 lb each. The truck configuration with axle loads is shown figure 15.

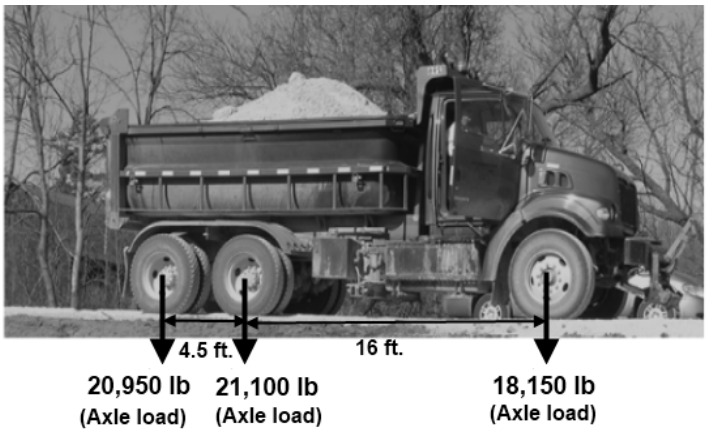

Figure 15. Photo. Axle weight and configuration of the test truck.

Seven load paths were used to evaluate the field performance of the waffle deck panel system and its connections. The outer edge of the loading truck was located 2 ft from each barrier rail in load paths 1 and 7. In load paths 2 and 6, the truck edge was along the centerline of each respective traffic lane, causing maximum movement in the deck panel. Load paths 4 and 5 were 2 ft to either side of the bridge centerline for the outer edge of the truck, and load path 3 straddled the centerline of the bridge. A schematic of the load paths is shown in figure 16.

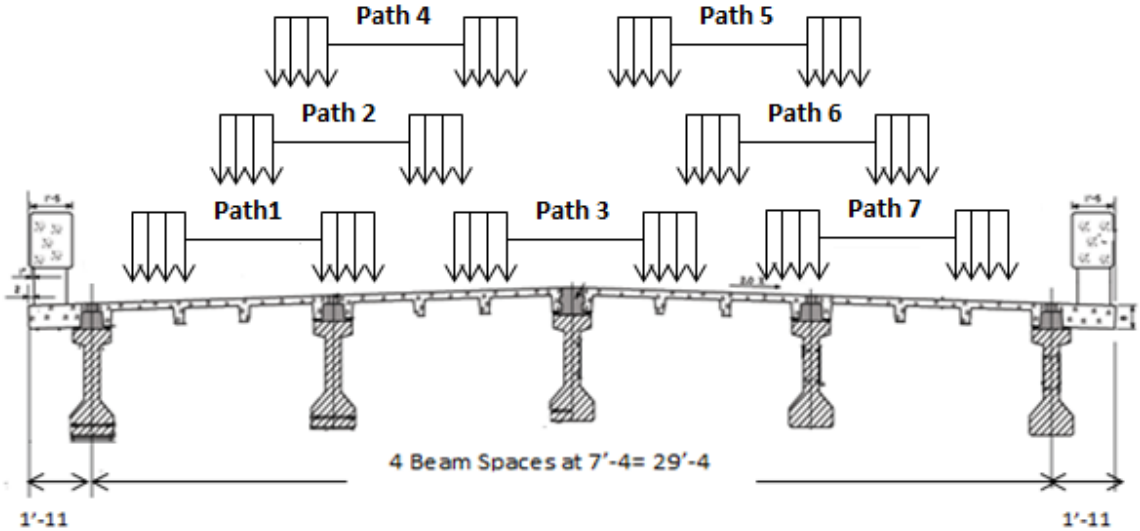

Figure 16. Diagram. Schematic layout of the load paths used for field testing.

For static tests, the truck was driven across the bridge at very slow speed (< 5 mph). Each load path was traversed twice to ensure repeatability of the measured bridge response. For dynamic tests, the truck speed was increased to 30 mph to examine dynamic amplification effects.

Taking advantage of the bridge symmetry about its longitudinal and transverse centerlines, two UHPC waffle deck panels along the length of the bridge were selected for instrumentation. One of these panels was located near the mid-span, and the other was located adjacent to the south abutment.

Surface-mounted strain gages were used on each panel and their adjacent UHPC deck joints to quantify deformations and identify the likelihood of cracking under service loads. The locations of these strain gages were selected carefully to coincide with critical locations on the panels and deck joints where stress and strain would likely be extreme.

In addition to the strain gages on the deck panels, 13 surface-mounted strain gages and 5 string potentiometers were attached to the girders to characterize the global bridge behavior, measure mid-span deflections, and quantify lateral live load distribution factors. Using two additional string potentiometers, deflections were also measured at the mid-spans of the deck panel located near the center of the bridge. Top and bottom girder strains were monitored for three of the girders at mid-span and at a section 2 ft from the southerly abutment. More details about the instrumentation can be found in Rouse et al.[42]

The maximum strain in the UHPC waffle deck panel at the mid-span recorded during the static load testing was 95 microstrains. This value is well below the cracking strain for the UHPC. This behavior implies that there is no cracking in this deck panel, and it is responding elastically to the applied truck load. However, the maximum strain measured in the waffle deck panel adjacent to the abutment was 276.2 microstrains, which is slightly more than the cracking strain of UHPC. The maximum deck deflection recorded for the static loading for different load paths was 0.038 in., which is well below the allowable AASHTO deflection requirements. Overall, the bridge system performed as expected, confirming the excellent behavior of the waffle deck system.

CHAPTER 2. WAFFLE DECK PANEL DESIGN

INTRODUCTION

The research team recognized that establishing efficient details for a full-depth waffle deck panel for a given bridge would be critical in ensuring successful implementation of this new technology in new and rehabilitation of highway bridges. This chapter presents a detailed design for the waffle deck panel components, including the reinforcement, typical deck panel dimensions, transverse and longitudinal rib configuration, and allowable dimensions for the different components including the connection regions.

UHPC WAFFLE DECK PANEL

A UHPC waffle deck panel consists of a slab cast integrally with concrete ribs spanning in the transverse and longitudinal directions (see figure 17).

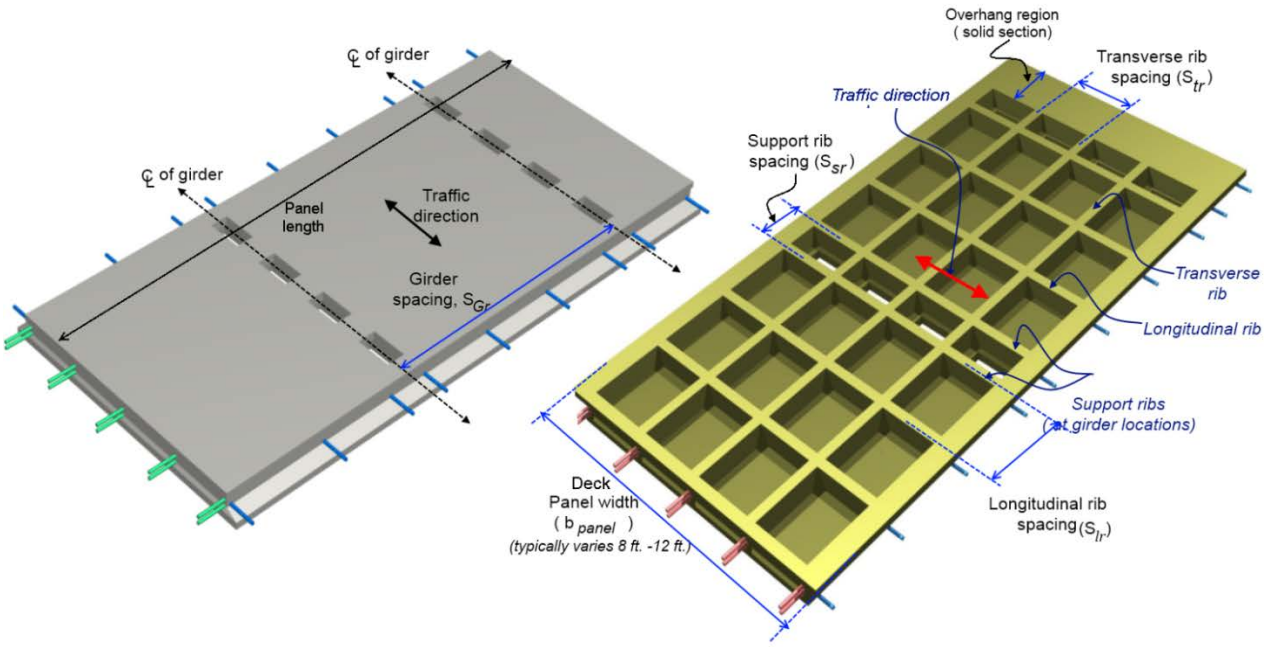

Figure 17. Diagrams. Schematic view of UHPC deck panel.

This system is similar to the two-way joist system used by the building industry. A transverse strip along the deck panel acts as a T-beam, transferring wheel loads to the adjacent bridge girders. The longitudinal ribs help in distributing the wheel loads to the adjacent panels through the panel-to-panel connections. The reinforcement needed to resist the wheel loads is provided in the ribs running in both directions.

The important parameters that define the design of the full-depth UHPC waffle deck panel are as follows:

- Length (dimension perpendicular to direction of the traffic), width (dimension in the direction of traffic), and thickness of the waffle deck panel.
- Dimensions and spacing of the longitudinal and transverse ribs; note that the spacing of the ribs in both directions will be influenced largely by the girder-to-girder spacing, panel dimensions, and minimum detailing requirements of panel-to-panel connections.
- Shear pocket dimensions, spacing, and size, type of shear connectors needed to achieve full composite action between the precast waffle panels and supporting systems (concrete girders, steel girders, stringers, etc.).
- Design and details of mild steel reinforcement in the waffle panel ribs.
- Configuration and reinforcement details of the panel-to-panel connections (transverse joint).
- Configuration and reinforcement details of the panel-to-girder connections (longitudinal joint).
- Overhang dimensions and details.
- Parapets and parapet connection details at the deck level.

The major design and construction parameters that affect the details of the UHPC waffle deck panel system are described below.

Bridge Dimensions (Roadway Width): The waffle deck panel dimensions are dependent on the roadway width. For practical purposes, the panel dimensions are also limited by the allowable transportation and handling limits for deck panels at the precast plant and the job site. If the roadway width is more than 24 ft, it is recommended to use waffle panels with lengths equal to half of the roadway width. This will not only help in easy handling of the panels but also accelerate the construction of the bridge on site. This approach will also allow crowning requirements to be accommodated using steps in the beams and a constant haunch thickness.

Bridge Configuration: The focus of design in this chapter is on waffle deck panels applicable to straight bridges. For skewed bridges, the rectangular waffle deck panels may be used in conjunction with special end panels that can account for the effects of bridge skew. The end panels may be made of solid or waffle panels using UHPC or HPC. HPC panels may require prestressing to minimize cracking. The final choice for the end panel is left to the judgment of the designer with due consideration to costs of material and fabrication. In the case of curved bridges, similar deck panel details with necessary functional modifications may be used.

Bridge Type and Girder Spacing: There are currently more than 600,000 bridges in the US. Typical bridges use either prestressed precast concrete girders (see figure 18c) or steel girder (see figure 18a) or stringers at different center-to-center spacing for transferring loads from the deck to the substructure such as piers, foundations, and abutments. A small percentage of bridges use a superstructure with a deck supported by closely placed steel stringers, which in turn are supported by deep steel end girders or steel trusses, as shown in figure 18b and figure 18d. It is important to note that these types of bridges are fracture-critical and not used by several DOTs

for new bridges. However, existing bridges with such configurations are considered candidates for replacement of deteriorated decks with UHPC waffle panels.

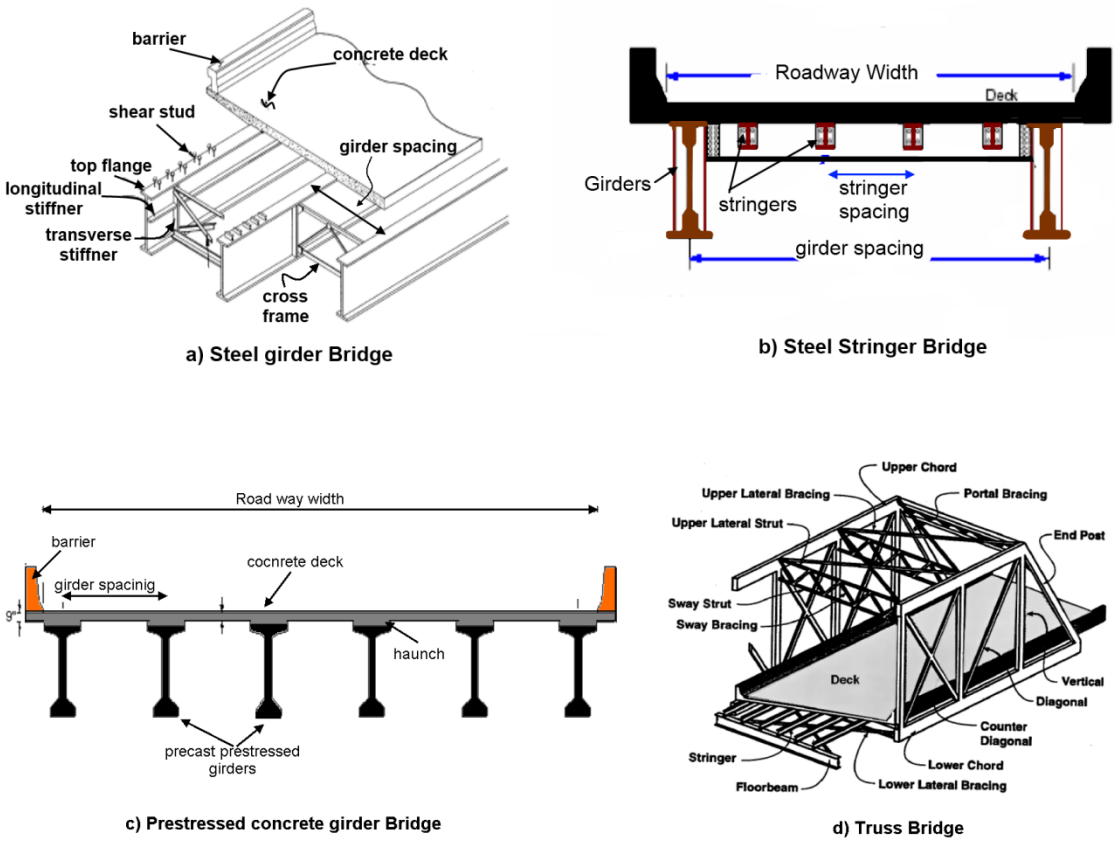

Figure 18. Diagrams. Illustrations of typical components of bridges.

Based on the extensive review of current standard details used by several State DOTs (Alabama, Florida, Georgia, Illinois, Indiana, Iowa, Kentucky, Nebraska, New Jersey, New York, Ohio, Oklahoma, Virginia, and Wisconsin), the researchers found that the typical spacing used for the precast prestressed girders varies between 6 and 12 ft. The average girder spacing was found to be 8 ft for routine State and county bridges. In the case of steel girder bridges, the most often used maximum girder spacing was found to be 10 ft, although a girder spacing as much as 12 to 14 ft has been used occasionally.

Given the commonly used spacing and input received from the representatives of the Iowa DOT and the FHWA, the maximum girder spacing in this guide is limited to 10 ft to allow the waffle deck panels to be optimized for the most frequently used bridge designs.

Girder Type: The typical bridges in the US use standard prestressed concrete girders, steel beams, or stringers through the use of standard W sections, or built-up steel girders. The cross-

section details of the girders vary depending on girder span, roadway width, and design practices specific to the local jurisdiction. The waffle deck panels in all cases are tied to the girders using appropriate connections (see chapter 3 for details) and designed to act compositely with the girders. Consequently, the top flange width of the girder will influence the spacing between the support ribs of the waffle deck (see figure 19).

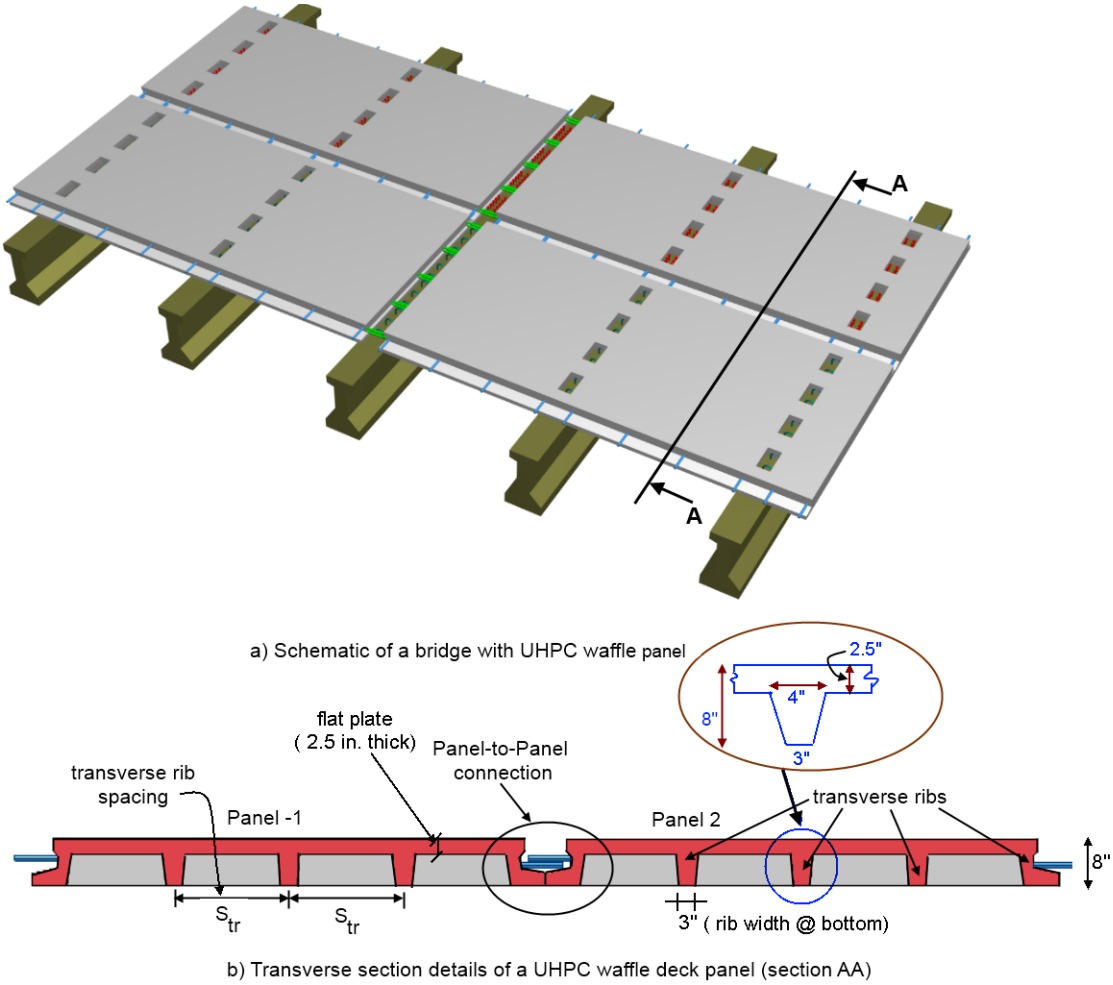

Figure 19. Diagrams. Schematic of UHPC panels supported by girders.

In addition, the top flange width will dictate the location of the maximum negative bending moment in the deck panel.[27] Based on the review of the standard concrete girder details used by several DOTs, the minimum and maximum values for the top flange width were found to be 12 inches and 4 feet, respectively. To remain conservative, the top flange width of the girder is thus assumed to be 12 inches.

Dimensions of the Deck Panel

Panel Thickness: The AASHTO Load and Resistance Factor Design (LRFD) specification requires a minimum thickness of 7 inches for deck panels excluding any provision for grooving,

grinding, or sacrificial surfaces.[27] However, the thickness of the deck panel is decided based on the minimum cover requirements and the overhang design. Following the preliminary analysis that took advantage of UHPC material properties, an 8-inch-thick panel was found to be structurally sufficient for most cases.

Panel Length and Width: As previously described, length and width of the panel depends on the handling requirements of the panels at the precast plant and at the job site along with the transportation constraints. The exact length and width of the panels will vary depending on the span and width of the bridge. Hence, it is left to the judgment of the designer to arrive at the desirable dimensions based on requirements of the bridge under consideration. However, as described below, this guide provides suggestions on the transverse and longitudinal rib spacing limits.

Flat Plate Thickness: The thickness of the flat plate connecting the ribs on top in the UHPC waffle deck panel is dictated by the punching shear capacity of the plate between the ribs, cover requirements of top transverse and longitudinal reinforcement, and any anticipated surface wearing over time. With the limited data available on the punching shear capacity of UHPC, a 2.5-inch-thick flat plate is recommended to prevent a punching shear failure between the ribs for the design truck load. Based on an experimental test completed at ISU, the punching shear capacity of UHPC was found to be 1 ksi, yielding a punching shear capacity of 200 kips for a 2.5-inch-thick UHPC plate under typical truck tire dimensions of 10 inches by 20 inches.

Rib Dimensions and Spacing: Based on the side cover requirements for the reinforcement, as well as the previous studies completed by the FHWA and ISU, the width of transverse and longitudinal ribs was chosen to be 3 inches at the bottom with a gradual increase to 4 inches at the top of the ribs at the rib-to-plate interface (see figure 19b).[17,40] The tapering of the rib helps with the easy removal of panel formwork during construction.

The spacing between the transverse and longitudinal ribs will depend on the girder-to-girder spacing, width of the panel, and minimum number of dowels required to establish sufficient panel-to-panel connections, as the dowels need to be accommodated within rib locations. Based on the limited available data on punching shear behavior, to limit the local damage to the flat plate and control cracking of the panel under service loads, the maximum allowable rib spacing is limited to 36 inches. Considering the wide range of girder-to-girder spacing used in current practice by the DOTs, it is expected that utilizing longitudinal and transverse rib spacing varying from 18 to 36 inches would accommodate the design of UHPC waffle deck for a variety of bridges.

The support longitudinal ribs that are located at the girder lines provide an enclosure for the girder-to-panel connection, which is referred to as the shear pocket connection, making the support rib spacing dependent on the top flange width of the girder. Consequently, it is recommended that the support rib spacing is limited to a value less than the beam top flange width, which uses a minimum value of 12 inches.

Shear Pockets: As noted above, shear pockets are provided along the precast panel width to facilitate a composite connection between the precast deck panels and the supporting girders using shear connectors and in situ UHPC. The spacing of the shear pockets depends on the arrangement of the shear connectors. If the shear studs/hooks are positioned uniformly along the girder length, the shear pocket spacing should be equal to the transverse rib spacing. However, if a group configuration is used for the shear studs, the shear pockets can be placed at a spacing of 2 to 4 ft apart, depending on the spacing between the shear stud groups. While the shear pockets are not required in every cell between the ribs, it is recommended that the shear pockets should be located in every other cell and close to the center of two adjacent transverse ribs.

The dimensions of the shear pocket should be enough to accommodate the easy pouring of in situ UHPC to create the composite action. An opening with minimum dimension of 4 inches by 8 inches is recommended. However, the designer can decide the dimensions and appropriate shape of the opening based on standard practice.

Panel Transverse Design

The waffle deck panel system may be designed using the strip method as described by the current AASHTO LRFD specifications.[27] A transverse strip of the deck is analyzed as a continuous beam supported by bridge girders, which are assumed to be considered as non-settling rigid supports. The transverse strip width depends on the regions along the deck panel cross-section (along the length of the panel) (+ve moment, -ve moment or overhang) is given by Article 4.6.2.1.3 in the AASHTO guidelines (see figure 20).

$$\text{transverse strip width } \left(W_{ts}\right)(\text{in.}) = \begin{Bmatrix} 26 + 6.6\ S\ (\text{ft}) \\ 48 + 3.0\ S\ (\text{ft}) \\ 45 + 10.0\ X\ (\text{ft}) \end{Bmatrix}$$

Figure 20. Equation. The transverse strip width according to article 4.6.2.1.3 of AASHTO LRFD guidelines.

where S = girder-to-girder spacing in feet and X = distance of the critical location from the centerline of exterior girder (in feet).

The entire transverse strip is designed to resist the dead load and live load effects with appropriate load factors at different limit states. The equivalent transverse strip widths for different girder spacing are presented in table 4.

Table 4. Design strip width (W_{ts}).

Span (ft-in.)	Transverse Strip Width (in.)	
	+ve moment	*-ve moment*
4'-0"	52.40	60.00
4'-3"	54.05	60.75
4'-6"	55.70	61.50
4'-9"	57.35	62.25
5'-0"	59.00	63.00
5'-3"	60.65	63.75
5'-6"	62.30	64.50
5'-9"	63.95	65.25
6'-0"	65.60	66.00
6'-3"	67.25	66.75
6'-6"	68.90	67.50
6'-9"	70.55	68.25
7'-0"	72.20	69.00
7'-3"	73.85	69.75
7'-6"	75.50	70.50
7'-9"	77.15	71.25
8'-0"	78.80	72.00
8'-3"	80.45	72.75
8'-6"	82.10	73.50
8'-9"	83.75	74.25
9'-0"	85.40	75.00
9'-3"	87.05	75.75
9'-6"	88.70	76.50
9'-9"	90.35	77.25
10'-0"	92.00	78.00

Design moments are determined at three different regions along the panel cross-section. These regions are for the span between girders, sections over interior girders, and the overhang section. As detailed in the AASHTO guidelines, the interior spans between girders are investigated for positive bending at the strength-I limit state. Sections over interior girders are examined for negative bending at the strength-I limit. The overhang region is investigated for different combinations of dead, live, and collision loads for the strength-I and extreme event II limit states. Load factors for the three different regions and accompanying limit states are presented in table 5 (adopted from Section 3.4 and Article 13.4 of the AASHTO specifications).[27]

Table 5. Load factors for different limit states.

Region	Limit State	DC	DW	LL
Between girders	Strength I	1.25	1.50	1.75
Over interior girders	Strength I	1.25	1.50	1.75
Overhang	Strength I	1.25	1.50	1.75
Overhang	Extreme Event II	1.00	1.00	1.00

DC = dead load of structural components; DW = dead load of wearing surface; LL = vehicular live load

The following subsections discuss the procedure used to determine live, dead, and collision loads on the UHPC deck for different limit states. The 2010 AASHTO LRFD Bridge Design Specifications have been used to determine the appropriate loads.[27] In addition, based on the previously established sections, the following design parameters are used while arriving at the loads on the deck panels.

- An 8-inch waffle deck panel with the transverse and longitudinal rib dimensions as shown in figure 19b.
- The longitudinal and transverse rib spacing varying from 18 to 36 inches.
- A girder spacing of 4 to 10 ft.
- The assumed railing system will influence the design of the overhang in the deck system. Although the Iowa DOT standard F-shape concrete barrier is used as a railing system, here, the designer may choose appropriate railing/barrier details and make appropriate modifications to arrive at the overhang design of the waffle deck panel.

Dead Load

Dead load on the waffle panel includes the self-weight of the panel (DC) and the weight of any future wearing surface or overlays (if used by the DOT). The material properties shown in table 6 are recommended for determining the self-weight. Additional guidance on estimating different dead load components is given below.

Table 6. Recommended values for estimating dead load.

Component	**Density**
UHPC unit weight (see Chapter 1)	157 pcf
Wearing surface unit weight (bituminous) AASHTO Table 3.5.1-1	140 pcf

Self-Weight of Waffle Deck Panel: Self-weight of the waffle deck panel depends on the dimensions such as overall deck thickness and rib spacing in both longitudinal and transverse directions. As described before, for wide usage of the waffle deck technology, this report presents several deck panel options with variable rib spacing to meet different bridge types and girder spacing requirements. The self-weight of the waffle deck can be estimated using the equation shown in figure 21, and values for different rib spacing are provided in table 7.

$$w_{waffle} \text{ (in psf.)} = \left(h_{slab} + \left(1 + \frac{S_{tr}}{S_{lr}} \right) \frac{b_w h_w}{S_{tr}} \right) \left(\frac{\gamma_{uhpc}}{12} \right)$$

Figure 21. Equation. Self-weight of waffle deck for different rib spacing.

where h_{slab} = thickness of top slab in inches (= 2.5 in.), S_{tr} = transverse rib spacing in inches, S_{lr} = longitudinal rib spacing in inches, h_w = rib height in inches (= $h_{deck} – h_{slab}$) (= 8 in. - 2.5 in. = 5.5

in.), and γ_{uhpc} = unit density of UHPC in pcf (see table 6). Multiplying the tabulated values in table 7 by the design strip width (W_{ts}) (in ft) will give the dead load value per linear foot.

Table 7. Self-weight of the deck panel (w_{waffle}) in psf for different rib spacing.

	Transverse Rib Spacing (in.)						
Longitudinal Rib Spacing (in.)	**36**	**33**	**30**	**27**	**24**	**21**	**18**
36	46.70	47.34	48.10	49.03	50.20	51.70	53.70
33	47.34	47.97	48.74	49.67	50.83	52.33	54.33
30	48.10	48.74	49.50	50.43	51.60	53.10	55.10
27	49.03	49.67	50.43	51.36	52.53	54.03	56.03
24	50.20	50.83	51.60	52.53	53.70	55.20	57.19
21	51.70	52.33	53.10	54.03	55.20	56.69	58.69
18	53.70	54.33	55.10	56.03	57.19	58.69	60.69

Self-Weight of Wearing Surface: Note that the wearing surface may be eliminated if an appropriate riding surface is incorporated into the waffle panel during casting. However, if a designer chooses to include a wearing surface, its appropriate weight should be included. Given the thickness of the wearing surface varies depending on local design practices, a 2.0-inch-thick wearing surface is assumed and the dead load due to the wearing surface is estimated using relationship shown in figure 22. When a different thickness of t_{ws} is used for the wearing surface, the value in this equation may be modified by multiplying it by $t_{ws}/2$.

$$w_{ws} = (140\,\text{pcf})\left(\frac{2.0\text{ in.}}{12\text{ in.}}\right) = 23.3\text{ psf}$$

Figure 22. Equation. The dead load due to a 2-inch-thick wearing surface.

Dead Load from Barrier/Railing

Given the potential variations in dimensions of barriers, the Iowa DOT standard concrete barrier (F-section continuous barrier rail) is used to estimate the dead load on the bridge overhang section. This barrier is 44 inches tall, 17 inches wide at the base, and 8.5 inches wide at the top. It is reinforced with seven longitudinal #5 bars distributed throughout the cross section and #5 stirrups spaced at 12 inches. More information about this barrier is provided in table 8.

Table 8. Properties of F-section continuous barrier rail as used by the Iowa DOT.

Property	**Value**
Weight per unit length	540 lb/ft
Barrier height	44 in.
Width at base of barrier	17 in.
Center of gravity location	5.73 in.

Live Load

The precast deck panel is designed for HL-93 truck loading. More details of the HL-93 truck loading can be found in section 3.6 of the AASHTO LRFD Bridge Design Specifications.[27]

Collision Load

The collision moment capacity of the Iowa DOT standard F-shape barrier (M_c) varies from 13 kip-ft/ft to 13.9 kip-ft/ft depending on the location and test level (TL). A detail of the standard F-type barrier is shown in figure 45. The collision design parameters for the barrier are taken from the Iowa DOT Bridge Design Manual and are summarized in table 9.[43] The values presented in table 9 may be replaced with appropriate information to meet the local design practice.

Table 9. Collision design parameters suggested for the Iowa standard F-type barrier.

Parameters			
Rail Rating	**R_w (kips)**	**L_c (ft)**	**M_c k-ft/ft (avg)**
TL-4 interior	117	11.5	13.0
TL-4, end	74	8.0	13.0
TL-5, interior	138	16.7	13.9
TL-5, end	133.6	9.7	13.9

Interior Deck Design Moment Demand

As detailed in table 5, the moment demand for deck panel between the girders (+ve moment region) and at the interior girder locations (-ve moment region) is estimated using the strength-I limit state. The moment demands due to different loads are:

- **Dead load moment:** Considering the self-weight of the waffle deck panel and dead load of the wearing surface, the design dead load at strength-I limit state for the transverse strip can be estimated using the equation presented in figure 23.

$$w_{D,des} = 1.25\, w_{waffle}\, W_{ts} + 1.5\, w_{ws}\, W_{ts}$$

Figure 23. Equation. The design dead load at the strength-I limit state.

where w_{waffle} = self-weight of the panel (from table 7), W_{ts} = transverse strip width (from table 3), and w_{ws} = wearing surface (= 23.3* t_{ws}/2 psf) (from figure 23).

- The positive and negative moment due to design dead load for the design strip can be conservatively estimated using the equation in figure 24:

$$M_{DL,des}^{+ve}\,(\text{kip-ft}) = M_{DL,des}^{-ve}\,(\text{kip-ft}) = \frac{w_{D,des}\ (\text{k/ft})\ S^2\,(\text{ft})}{10}$$

Figure 24. Equation. The positive and negative bending moment due to dead load for the design strip.

where $w_{D,des}$ = factored dead load and S = girder-to-girder spacing. Dividing the design moment with the design strip width (W_{ts}) gives the design moment per 1-ft-wide transverse strip. The corresponding values for different rib spacing in the longitudinal and transverse directions and girder-to-girder spacing are provided in table 10.

- **Live load moment:** The maximum positive (M_{LL}^{+ve}) and negative (M_{LL}-^{ve}) live load moment should be taken from the AASHTO LRFD Bridge Design Specifications Table A4-1, which lists the maximum live load moments for different girder spacing.[27] This value already accounts for multiple presence factors and a dynamic load allowance. The values from Table A4-1 for live load design moments for positive and negative bending regions are reproduced for convenience in table 11 and table 12, respectively.

- **Design moment:** The design moment demand at the strength-I limit state should be estimated using the load combinations presented in table 5 and is given by the equation in figure 25:

$$M_u^{+ve} = M_{DL,des}^{+ve} + M_{LL}^{+ve}$$

and

$$M_u^{-ve} = M_{DL,des}^{-ve} + M_{LL}^{-ve}$$

Figure 25. Equation. The design moment demand equation for strength-I limit state.

The design moment values for different girder spacing and transverse rib spacing may be estimated using the values from tables 10 through 12. Tables 13 and 14 present the design moment demands for the positive and negative moment regions of the deck panel, respectively. The critical section location for the negative moment is taken as 3 inches from the centerline of the girder. This value is justified to be equal to one-fourth the minimum flange width for typical bridge girders, which was found to be 12 inches (based on the survey of the DOT standard details). From table 13, it is clear that the maximum +ve moment demand varies from 8.29 kip-ft/ft to 13.17 kip-ft/ft as the girder spacing varies from 4 ft to 10 ft. In addition, from table 14, it is noted that the maximum -ve moment demand varies from 3.81 kip-ft/ft to 13.41 kip-ft/ft as the girder spacing increases.

Table 10. Suitable values for estimating the design moments for waffle deck panels due to dead load (self weight and wearing surface).

Girder Spacing →		Design positive and negative moment values due to dead load (kip-ft/ft) ($M^{+ve}_{DL, des}$ and $M^{-ve}_{DL, des}$)																								
		4’-0”	4’-3”	4’-6”	4’-9”	5’-0”	5’-3”	5’-6”	5’-9”	6’-0”	6’-3”	6’-6”	6’-9”	7’-0”	7’-3”	7’-6”	7’-9”	8’-0”	8’-3”	8’-6”	8’-9”	9’-0”	9’-3”	9’-6”	9’-9”	10’
	Longitudinal rib spacing = 36”																									
Transverse rib spacing (in.)	36”	0.15	0.17	0.19	0.21	0.23	0.26	0.28	0.31	0.34	0.36	0.39	0.43	0.46	0.49	0.53	0.56	0.60	0.64	0.67	0.71	0.76	0.80	0.84	0.89	0.93
	33”	0.15	0.17	0.19	0.21	0.24	0.26	0.28	0.31	0.34	0.37	0.40	0.43	0.46	0.49	0.53	0.57	0.60	0.64	0.68	0.72	0.76	0.81	0.85	0.90	0.94
	30”	0.15	0.17	0.19	0.21	0.24	0.26	0.29	0.31	0.34	0.37	0.40	0.43	0.47	0.50	0.54	0.57	0.61	0.65	0.69	0.73	0.77	0.81	0.86	0.90	0.95
	27”	0.15	0.17	0.19	0.22	0.24	0.27	0.29	0.32	0.35	0.38	0.41	0.44	0.47	0.51	0.54	0.58	0.62	0.66	0.70	0.74	0.78	0.82	0.87	0.92	0.96
	24”	0.16	0.18	0.20	0.22	0.24	0.27	0.30	0.32	0.35	0.38	0.41	0.45	0.48	0.51	0.55	0.59	0.63	0.67	0.71	0.75	0.79	0.84	0.88	0.93	0.98
	21”	0.16	0.18	0.20	0.22	0.25	0.27	0.30	0.33	0.36	0.39	0.42	0.45	0.49	0.52	0.56	0.60	0.64	0.68	0.72	0.76	0.81	0.85	0.90	0.95	1.00
	18”	0.16	0.18	0.21	0.23	0.26	0.28	0.31	0.34	0.37	0.40	0.43	0.47	0.50	0.54	0.57	0.61	0.65	0.70	0.74	0.78	0.83	0.87	0.92	0.97	1.02
	Longitudinal rib spacing = 33”																									
Transverse rib spacing (in.)	36”	0.15	0.17	0.19	0.21	0.24	0.26	0.28	0.31	0.34	0.37	0.40	0.43	0.46	0.49	0.53	0.57	0.60	0.64	0.68	0.72	0.76	0.81	0.85	0.90	0.94
	33”	0.15	0.17	0.19	0.21	0.24	0.26	0.29	0.31	0.34	0.37	0.40	0.43	0.47	0.50	0.53	0.57	0.61	0.65	0.69	0.73	0.77	0.81	0.86	0.90	0.95
	30”	0.15	0.17	0.19	0.22	0.24	0.26	0.29	0.32	0.35	0.37	0.41	0.44	0.47	0.50	0.54	0.58	0.61	0.65	0.69	0.73	0.78	0.82	0.87	0.91	0.96
	27”	0.16	0.18	0.20	0.22	0.24	0.27	0.29	0.32	0.35	0.38	0.41	0.44	0.48	0.51	0.55	0.58	0.62	0.66	0.70	0.74	0.79	0.83	0.88	0.92	0.97
	24”	0.16	0.18	0.20	0.22	0.25	0.27	0.30	0.33	0.35	0.38	0.42	0.45	0.48	0.52	0.55	0.59	0.63	0.67	0.71	0.75	0.80	0.84	0.89	0.94	0.99
	21”	0.16	0.18	0.20	0.23	0.25	0.28	0.30	0.33	0.36	0.39	0.42	0.46	0.49	0.53	0.56	0.60	0.64	0.68	0.73	0.77	0.81	0.86	0.91	0.95	1.00
	18”	0.16	0.19	0.21	0.23	0.26	0.28	0.31	0.34	0.37	0.40	0.43	0.47	0.50	0.54	0.58	0.62	0.66	0.70	0.74	0.79	0.83	0.88	0.93	0.98	1.03
	Longitudinal rib spacing = 30”																									
Transverse rib spacing (in.)	36”	0.15	0.17	0.19	0.21	0.24	0.26	0.29	0.31	0.34	0.37	0.40	0.43	0.47	0.50	0.54	0.57	0.61	0.65	0.69	0.73	0.77	0.81	0.86	0.90	0.95
	33”	0.15	0.17	0.19	0.22	0.24	0.26	0.29	0.32	0.35	0.37	0.41	0.44	0.47	0.50	0.54	0.58	0.61	0.65	0.69	0.73	0.78	0.82	0.87	0.91	0.96
	30”	0.15	0.17	0.20	0.22	0.24	0.27	0.29	0.32	0.35	0.38	0.41	0.44	0.47	0.51	0.54	0.58	0.62	0.66	0.70	0.74	0.78	0.83	0.87	0.92	0.97
	27”	0.16	0.18	0.20	0.22	0.25	0.27	0.30	0.32	0.35	0.38	0.41	0.45	0.48	0.52	0.55	0.59	0.63	0.67	0.71	0.75	0.79	0.84	0.88	0.93	0.98
	24”	0.16	0.18	0.20	0.22	0.25	0.27	0.30	0.33	0.36	0.39	0.42	0.45	0.49	0.52	0.56	0.60	0.64	0.68	0.72	0.76	0.81	0.85	0.90	0.95	0.99
	21”	0.16	0.18	0.21	0.23	0.25	0.28	0.31	0.34	0.36	0.40	0.43	0.46	0.50	0.53	0.57	0.61	0.65	0.69	0.73	0.78	0.82	0.87	0.91	0.96	1.01
	18”	0.17	0.19	0.21	0.23	0.26	0.29	0.31	0.34	0.37	0.41	0.44	0.47	0.51	0.55	0.58	0.62	0.66	0.71	0.75	0.80	0.84	0.89	0.94	0.99	1.04
	Longitudinal rib spacing = 27”																									
Transverse rib spacing (in.)	36”	0.15	0.17	0.19	0.22	0.24	0.27	0.29	0.32	0.35	0.38	0.41	0.44	0.47	0.51	0.54	0.58	0.62	0.66	0.70	0.74	0.78	0.82	0.87	0.92	0.96
	33”	0.16	0.18	0.20	0.22	0.24	0.27	0.29	0.32	0.35	0.38	0.41	0.44	0.48	0.51	0.55	0.58	0.62	0.66	0.70	0.74	0.79	0.83	0.88	0.92	0.97
	30”	0.16	0.18	0.20	0.22	0.25	0.27	0.30	0.32	0.35	0.38	0.41	0.45	0.48	0.52	0.55	0.59	0.63	0.67	0.71	0.75	0.79	0.84	0.88	0.93	0.98
	27”	0.16	0.18	0.20	0.22	0.25	0.27	0.30	0.33	0.36	0.39	0.42	0.45	0.49	0.52	0.56	0.60	0.63	0.68	0.72	0.76	0.80	0.85	0.90	0.94	0.99
	24”	0.16	0.18	0.20	0.23	0.25	0.28	0.30	0.33	0.36	0.39	0.43	0.46	0.49	0.53	0.57	0.60	0.64	0.69	0.73	0.77	0.82	0.86	0.91	0.96	1.01
	21”	0.16	0.19	0.21	0.23	0.26	0.28	0.31	0.34	0.37	0.40	0.43	0.47	0.50	0.54	0.58	0.62	0.66	0.70	0.74	0.79	0.83	0.88	0.93	0.97	1.03
	18”	0.17	0.19	0.21	0.24	0.26	0.29	0.32	0.35	0.38	0.41	0.44	0.48	0.51	0.55	0.59	0.63	0.67	0.71	0.76	0.80	0.85	0.90	0.95	1.00	1.05

Table 10. Suitable values for estimating the design moments for waffle deck panels due to dead load (self weight and wearing surface), continued.

Girder Spacing →		Design positive and negative moment values due to dead load (kip-ft/ft) ($M^{+ve}_{DL, des}$ and $M^{-ve}_{DL, des}$)																								
		4’-0”	4’-3”	4’-6”	4’-9”	5’-0”	5’-3”	5’-6”	5’-9”	6’-0”	6’-3”	6’-6”	6’-9”	7’-0”	7’-3”	7’-6”	7’-9”	8’-0”	8’-3”	8’-6”	8’-9”	9’-0”	9’-3”	9’-6”	9’-9”	10’
Transverse rib spacing (in.)	***Longitudinal rib spacing = 24”***																									
	36”	0.16	0.18	0.20	0.22	0.24	0.27	0.30	0.32	0.35	0.38	0.41	0.45	0.48	0.51	0.55	0.59	0.63	0.67	0.71	0.75	0.79	0.84	0.88	0.93	0.98
	33”	0.16	0.18	0.20	0.22	0.25	0.27	0.30	0.33	0.35	0.38	0.42	0.45	0.48	0.52	0.55	0.59	0.63	0.67	0.71	0.75	0.80	0.84	0.89	0.94	0.99
	30”	0.16	0.18	0.20	0.22	0.25	0.27	0.30	0.33	0.36	0.39	0.42	0.45	0.49	0.52	0.56	0.60	0.64	0.68	0.72	0.76	0.81	0.85	0.90	0.95	0.99
	27”	0.16	0.18	0.20	0.23	0.25	0.28	0.30	0.33	0.36	0.39	0.43	0.46	0.49	0.53	0.57	0.60	0.64	0.69	0.73	0.77	0.82	0.86	0.91	0.96	1.01
	24”	0.16	0.18	0.21	0.23	0.26	0.28	0.31	0.34	0.37	0.40	0.43	0.47	0.50	0.54	0.57	0.61	0.65	0.70	0.74	0.78	0.83	0.87	0.92	0.97	1.02
	21”	0.17	0.19	0.21	0.23	0.26	0.29	0.31	0.34	0.37	0.41	0.44	0.47	0.51	0.55	0.58	0.62	0.67	0.71	0.75	0.80	0.84	0.89	0.94	0.99	1.04
	18”	0.17	0.19	0.22	0.24	0.27	0.29	0.32	0.35	0.38	0.42	0.45	0.49	0.52	0.56	0.60	0.64	0.68	0.72	0.77	0.82	0.86	0.91	0.96	1.01	1.06
	Longitudinal rib spacing = 21”																									
Transverse rib spacing (in.)	36”	0.16	0.18	0.20	0.22	0.25	0.27	0.30	0.33	0.36	0.39	0.42	0.45	0.49	0.52	0.56	0.60	0.64	0.68	0.72	0.76	0.81	0.85	0.90	0.95	1.00
	33”	0.16	0.18	0.20	0.23	0.25	0.28	0.30	0.33	0.36	0.39	0.42	0.46	0.49	0.53	0.56	0.60	0.64	0.68	0.73	0.77	0.81	0.86	0.91	0.95	1.00
	30”	0.16	0.18	0.21	0.23	0.25	0.28	0.31	0.34	0.36	0.40	0.43	0.46	0.50	0.53	0.57	0.61	0.65	0.69	0.73	0.78	0.82	0.87	0.91	0.96	1.01
	27”	0.16	0.19	0.21	0.23	0.26	0.28	0.31	0.34	0.37	0.40	0.43	0.47	0.50	0.54	0.58	0.62	0.66	0.70	0.74	0.79	0.83	0.88	0.93	0.97	1.03
	24”	0.17	0.19	0.21	0.23	0.26	0.29	0.31	0.34	0.37	0.41	0.44	0.47	0.51	0.55	0.58	0.62	0.67	0.71	0.75	0.80	0.84	0.89	0.94	0.99	1.04
	21”	0.17	0.19	0.21	0.24	0.26	0.29	0.32	0.35	0.38	0.41	0.45	0.48	0.52	0.56	0.60	0.64	0.68	0.72	0.76	0.81	0.86	0.91	0.96	1.01	1.06
	18”	0.17	0.20	0.22	0.24	0.27	0.30	0.33	0.36	0.39	0.42	0.46	0.49	0.53	0.57	0.61	0.65	0.69	0.74	0.78	0.83	0.88	0.93	0.98	1.03	1.08
	Longitudinal rib spacing = 18”																									
Transverse rib spacing (in.)	36”	0.16	0.18	0.21	0.23	0.26	0.28	0.31	0.34	0.37	0.40	0.43	0.47	0.50	0.54	0.57	0.61	0.65	0.70	0.74	0.78	0.83	0.87	0.92	0.97	1.02
	33”	0.16	0.19	0.21	0.23	0.26	0.28	0.31	0.34	0.37	0.40	0.43	0.47	0.50	0.54	0.58	0.62	0.66	0.70	0.74	0.79	0.83	0.88	0.93	0.98	1.03
	30”	0.17	0.19	0.21	0.23	0.26	0.29	0.31	0.34	0.37	0.41	0.44	0.47	0.51	0.55	0.58	0.62	0.66	0.71	0.75	0.80	0.84	0.89	0.94	0.99	1.04
	27”	0.17	0.19	0.21	0.24	0.26	0.29	0.32	0.35	0.38	0.41	0.44	0.48	0.51	0.55	0.59	0.63	0.67	0.71	0.76	0.80	0.85	0.90	0.95	1.00	1.05
	24”	0.17	0.19	0.22	0.24	0.27	0.29	0.32	0.35	0.38	0.42	0.45	0.49	0.52	0.56	0.60	0.64	0.68	0.72	0.77	0.82	0.86	0.91	0.96	1.01	1.06
	21”	0.17	0.20	0.22	0.24	0.27	0.30	0.33	0.36	0.39	0.42	0.46	0.49	0.53	0.57	0.61	0.65	0.69	0.74	0.78	0.83	0.88	0.93	0.98	1.03	1.08
	18”	0.18	0.20	0.22	0.25	0.28	0.31	0.34	0.37	0.40	0.43	0.47	0.51	0.54	0.58	0.62	0.67	0.71	0.75	0.80	0.85	0.90	0.95	1.00	1.05	1.11

Table 11. Table A4-1 from AASHTO LRFD specifications with a load factor of 1.75 as the LL positive moment effect in strength-I limit state.[27]

Girder Spacing (ft-in.)	**Live Load Positive Moment (M_{LL}^{+ve}) kip-ft/ft**	**Design Positive Moment ($M_{LL,des}^{+ve}$) = 1.75[a] (M_{LL}^{+ve}) kip-ft/ft**
4'-0"	4.68	8.19
4'-3"	4.66	8.16
4'-6"	4.63	8.10
4'-9"	4.64	8.12
5'-0"	4.65	8.14
5'-3"	4.67	8.17
5'-6"	4.71	8.24
5'-9"	4.77	8.35
6'-0"	4.83	8.45
6'-3"	4.91	8.59
6'-6"	5.00	8.75
6'-9"	5.10	8.93
7'-0"	5.21	9.12
7'-3"	5.32	9.31
7'-6"	5.44	9.52
7'-9"	5.56	9.73
8'-0"	5.69	9.96
8'-3"	5.83	10.20
8'-6"	5.99	10.48
8'-9"	6.14	10.75
9'-0"	6.29	11.01
9'-3"	6.44	11.27
9'-6"	6.59	11.53
9'-9"	6.74	11.80
10'-0"	6.89	12.06

Table 12. Table A4-1 from AASHTO LRFD specifications with a load factor of 1.75 as the LL negative moment effect in strength-I limit state).[27]

Girder Spacing (ft-in)	**Live Load Negative Moment (M_{LL}^{-ve}) kip-ft/ft**			**Design Negative Moment ($M_{LL,des}^{-ve}$) = 1.75[a] (M_{LL}^{+ve}) kip-ft/ft**		
	0”	**3”**	**6”**	**0”**	**3”**	**6”**
4’-0”	2.68	2.07	1.74	4.69	3.62	3.05
4’-3”	2.73	2.25	1.95	4.78	3.94	3.41
4’-6”	3.00	2.58	2.19	5.25	4.52	3.83
4’-9”	3.38	2.90	2.43	5.92	5.08	4.25
5’-0”	3.74	3.20	2.66	6.55	5.60	4.66
5’-3”	4.06	3.47	2.89	7.11	6.07	5.06
5’-6”	4.36	3.73	3.11	7.63	6.53	5.44
5’-9”	4.63	3.97	3.31	8.10	6.95	5.79
6’-0”	4.88	4.19	3.50	8.54	7.33	6.13
6’-3”	5.10	4.39	3.68	8.93	7.68	6.44
6’-6”	5.31	4.57	3.84	9.29	8.00	6.72
6’-9”	5.50	4.74	3.99	9.63	8.30	6.98
7’-0”	5.98	5.17	4.36	10.47	9.05	7.63
7’-3”	6.13	5.31	4.49	10.73	9.29	7.86
7’-6”	6.26	5.43	4.61	10.96	9.50	8.07
7’-9”	6.38	5.54	4.71	11.17	9.70	8.24
8’-0”	6.48	5.65	4.81	11.34	9.89	8.42
8’-3”	6.58	5.74	4.90	11.52	10.05	8.58
8’-6”	6.66	5.82	4.98	11.66	10.19	8.72
8’-9”	6.74	5.90	5.06	11.80	10.33	8.86
9’-0”	6.81	5.97	5.13	11.92	10.45	8.98
9’-3”	6.87	6.03	5.19	12.02	10.55	9.08
9’-6”	7.15	6.31	5.46	12.51	11.04	9.56
9’-9”	7.51	6.65	5.80	13.14	11.64	10.15
10’-0”	7.85	6.99	6.13	13.74	12.23	10.73

Table 13. The positive moment demand for waffle deck panel at strength-I limit state.

Girder Spacing →		Design positive moment values for UHPC waffle deck panel (kip-ft/ft)																								
		4’-0”	4’-3”	4’-6”	4’-9”	5’-0”	5’-3”	5’-6”	5’-9”	6’-0”	6’-3”	6’-6”	6’-9”	7’-0”	7’-3”	7’-6”	7’-9”	8’-0”	8’-3”	8’-6”	8’-9”	9’-0”	9’-3”	9’-6”	9’-9”	10’
	Longitudinal rib spacing = 36”																									
Transverse rib spacing (in.)	36”	8.34	8.32	8.29	8.33	8.37	8.43	8.52	8.66	8.79	8.96	9.14	9.35	9.58	9.80	10.05	10.29	10.56	10.84	11.16	11.46	11.76	12.07	12.38	12.68	12.99
	33”	8.34	8.33	8.29	8.33	8.37	8.43	8.53	8.66	8.79	8.96	9.15	9.35	9.58	9.80	10.05	10.30	10.56	10.84	11.16	11.47	11.77	12.08	12.38	12.69	13.00
	30”	8.34	8.33	8.30	8.33	8.38	8.43	8.53	8.66	8.79	8.96	9.15	9.36	9.58	9.81	10.06	10.30	10.57	10.85	11.17	11.47	11.78	12.08	12.39	12.70	13.01
	27”	8.34	8.33	8.30	8.34	8.38	8.44	8.53	8.67	8.80	8.97	9.16	9.36	9.59	9.82	10.06	10.31	10.57	10.86	11.18	11.48	11.79	12.09	12.40	12.71	13.02
	24”	8.35	8.33	8.30	8.34	8.38	8.44	8.54	8.67	8.80	8.97	9.16	9.37	9.60	9.82	10.07	10.32	10.58	10.87	11.19	11.49	11.80	12.11	12.41	12.72	13.03
	21”	8.35	8.33	8.30	8.34	8.39	8.45	8.54	8.68	8.81	8.98	9.17	9.38	9.61	9.83	10.08	10.33	10.60	10.88	11.20	11.51	11.81	12.12	12.43	12.74	13.05
	18”	8.35	8.34	8.31	8.35	8.39	8.45	8.55	8.69	8.82	8.99	9.18	9.39	9.62	9.85	10.09	10.34	10.61	10.90	11.22	11.53	11.83	12.14	12.45	12.77	13.08
	Longitudinal rib spacing = 33”																									
Transverse rib spacing (in.)	36”	8.34	8.33	8.29	8.33	8.37	8.43	8.53	8.66	8.79	8.96	9.15	9.35	9.58	9.80	10.05	10.30	10.56	10.84	11.16	11.47	11.77	12.08	12.38	12.69	13.00
	33”	8.34	8.33	8.29	8.33	8.37	8.43	8.53	8.66	8.79	8.96	9.15	9.36	9.58	9.81	10.05	10.30	10.57	10.85	11.17	11.47	11.78	12.08	12.39	12.70	13.01
	30”	8.34	8.33	8.30	8.34	8.38	8.44	8.53	8.66	8.80	8.97	9.16	9.36	9.59	9.81	10.06	10.31	10.57	10.86	11.18	11.48	11.78	12.09	12.40	12.71	13.02
	27”	8.35	8.33	8.30	8.34	8.38	8.44	8.54	8.67	8.80	8.97	9.16	9.37	9.59	9.82	10.07	10.31	10.58	10.86	11.18	11.49	11.79	12.10	12.41	12.72	13.03
	24”	8.35	8.33	8.30	8.34	8.38	8.44	8.54	8.67	8.81	8.98	9.17	9.37	9.60	9.83	10.07	10.32	10.59	10.87	11.19	11.50	11.81	12.11	12.42	12.73	13.04
	21”	8.35	8.34	8.31	8.35	8.39	8.45	8.55	8.68	8.81	8.98	9.17	9.38	9.61	9.84	10.08	10.33	10.60	10.89	11.21	11.51	11.82	12.13	12.44	12.75	13.06
	18”	8.35	8.34	8.31	8.35	8.39	8.46	8.55	8.69	8.82	8.99	9.18	9.39	9.62	9.85	10.10	10.35	10.62	10.90	11.23	11.53	11.84	12.15	12.46	12.77	13.09
	Longitudinal rib spacing = 30”																									
Transverse rib spacing (in.)	36”	8.34	8.33	8.30	8.33	8.38	8.43	8.53	8.66	8.79	8.96	9.15	9.36	9.58	9.81	10.06	10.30	10.57	10.85	11.17	11.47	11.78	12.08	12.39	12.70	13.01
	33”	8.34	8.33	8.30	8.34	8.38	8.44	8.53	8.66	8.80	8.97	9.16	9.36	9.59	9.81	10.06	10.31	10.57	10.86	11.18	11.48	11.78	12.09	12.40	12.71	13.02
	30”	8.34	8.33	8.30	8.34	8.38	8.44	8.54	8.67	8.80	8.97	9.16	9.37	9.59	9.82	10.06	10.31	10.58	10.86	11.18	11.49	11.79	12.10	12.41	12.72	13.03
	27”	8.35	8.33	8.30	8.34	8.38	8.44	8.54	8.67	8.81	8.98	9.16	9.37	9.60	9.83	10.07	10.32	10.58	10.87	11.19	11.50	11.80	12.11	12.42	12.73	13.04
	24”	8.35	8.33	8.30	8.34	8.39	8.45	8.54	8.68	8.81	8.98	9.17	9.38	9.61	9.83	10.08	10.33	10.59	10.88	11.20	11.51	11.81	12.12	12.43	12.74	13.05
	21”	8.35	8.34	8.31	8.35	8.39	8.45	8.55	8.68	8.82	8.99	9.18	9.39	9.61	9.84	10.09	10.34	10.61	10.89	11.21	11.52	11.83	12.14	12.45	12.76	13.07
	18”	8.36	8.34	8.31	8.35	8.40	8.46	8.56	8.69	8.83	9.00	9.19	9.40	9.63	9.86	10.10	10.35	10.62	10.91	11.23	11.54	11.85	12.16	12.47	12.78	13.10
	Longitudinal rib spacing = 27”																									
Transverse rib spacing (in.)	36”	8.34	8.33	8.30	8.34	8.38	8.44	8.53	8.67	8.80	8.97	9.16	9.36	9.59	9.82	10.06	10.31	10.57	10.86	11.18	11.48	11.79	12.09	12.40	12.71	13.02
	33”	8.35	8.33	8.30	8.34	8.38	8.44	8.54	8.67	8.80	8.97	9.16	9.37	9.59	9.82	10.07	10.31	10.58	10.86	11.18	11.49	11.79	12.10	12.41	12.72	13.03
	30”	8.35	8.33	8.30	8.34	8.38	8.44	8.54	8.67	8.81	8.98	9.16	9.37	9.60	9.83	10.07	10.32	10.58	10.87	11.19	11.50	11.80	12.11	12.42	12.73	13.04
	27”	8.35	8.33	8.30	8.34	8.39	8.45	8.54	8.68	8.81	8.98	9.17	9.38	9.60	9.83	10.08	10.33	10.59	10.88	11.20	11.50	11.81	12.12	12.43	12.74	13.05
	24”	8.35	8.34	8.31	8.35	8.39	8.45	8.55	8.68	8.81	8.99	9.18	9.38	9.61	9.84	10.09	10.33	10.60	10.89	11.21	11.52	11.82	12.13	12.44	12.75	13.06
	21”	8.35	8.34	8.31	8.35	8.39	8.46	8.55	8.69	8.82	8.99	9.18	9.39	9.62	9.85	10.10	10.35	10.61	10.90	11.22	11.53	11.84	12.15	12.46	12.77	13.08
	18”	8.36	8.34	8.32	8.36	8.40	8.46	8.56	8.69	8.83	9.00	9.19	9.40	9.63	9.86	10.11	10.36	10.63	10.92	11.24	11.55	11.86	12.17	12.48	12.79	13.11

Table 13. The positive moment demand for waffle deck panel at strength-I limit state, continued.

Girder Spacing →		Design positive moment values for UHPC waffle deck panel (kip-ft/ft)																								
		4’-0”	4’-3”	4’-6”	4’-9”	5’-0”	5’-3”	5’-6”	5’-9”	6’-0”	6’-3”	6’-6”	6’-9”	7’-0”	7’-3”	7’-6”	7’-9”	8’-0”	8’-3”	8’-6”	8’-9”	9’-0”	9’-3”	9’-6”	9’-9”	10’
	Longitudinal rib spacing = 24”																									
Transverse rib spacing (in.)	36”	8.35	8.33	8.30	8.34	8.38	8.44	8.54	8.67	8.80	8.97	9.16	9.37	9.60	9.82	10.07	10.32	10.58	10.87	11.19	11.49	11.80	12.11	12.41	12.72	13.03
	33”	8.35	8.33	8.30	8.34	8.38	8.44	8.54	8.67	8.81	8.98	9.17	9.37	9.60	9.83	10.07	10.32	10.59	10.87	11.19	11.50	11.81	12.11	12.42	12.73	13.04
	30”	8.35	8.33	8.30	8.34	8.39	8.45	8.54	8.68	8.81	8.98	9.17	9.38	9.61	9.83	10.08	10.33	10.59	10.88	11.20	11.51	11.81	12.12	12.43	12.74	13.05
	27”	8.35	8.34	8.31	8.35	8.39	8.45	8.55	8.68	8.81	8.99	9.18	9.38	9.61	9.84	10.09	10.33	10.60	10.89	11.21	11.52	11.82	12.13	12.44	12.75	13.06
	24”	8.35	8.34	8.31	8.35	8.39	8.45	8.55	8.69	8.82	8.99	9.18	9.39	9.62	9.85	10.09	10.34	10.61	10.90	11.22	11.53	11.83	12.14	12.45	12.77	13.08
	21”	8.36	8.34	8.31	8.35	8.40	8.46	8.56	8.69	8.83	9.00	9.19	9.40	9.63	9.86	10.10	10.35	10.62	10.91	11.23	11.54	11.85	12.16	12.47	12.78	13.10
	18”	8.36	8.35	8.32	8.36	8.40	8.47	8.56	8.70	8.84	9.01	9.20	9.41	9.64	9.87	10.12	10.37	10.64	10.93	11.25	11.56	11.87	12.18	12.49	12.81	13.12
	Longitudinal rib spacing = 21”																									
Transverse rib spacing (in.)	36”	8.35	8.33	8.30	8.34	8.39	8.45	8.54	8.68	8.81	8.98	9.17	9.38	9.61	9.83	10.08	10.33	10.60	10.88	11.20	11.51	11.81	12.12	12.43	12.74	13.05
	33”	8.35	8.34	8.31	8.35	8.39	8.45	8.55	8.68	8.81	8.98	9.17	9.38	9.61	9.84	10.08	10.33	10.60	10.89	11.21	11.51	11.82	12.13	12.44	12.75	13.06
	30”	8.35	8.34	8.31	8.35	8.39	8.45	8.55	8.68	8.82	8.99	9.18	9.39	9.61	9.84	10.09	10.34	10.61	10.89	11.21	11.52	11.83	12.14	12.45	12.76	13.07
	27”	8.35	8.34	8.31	8.35	8.39	8.46	8.55	8.69	8.82	8.99	9.18	9.39	9.62	9.85	10.10	10.35	10.61	10.90	11.22	11.53	11.84	12.15	12.46	12.77	13.08
	24”	8.36	8.34	8.31	8.35	8.40	8.46	8.56	8.69	8.83	9.00	9.19	9.40	9.63	9.86	10.10	10.35	10.62	10.91	11.23	11.54	11.85	12.16	12.47	12.78	13.10
	21”	8.36	8.35	8.32	8.36	8.40	8.46	8.56	8.70	8.83	9.01	9.20	9.41	9.64	9.87	10.12	10.37	10.64	10.92	11.25	11.56	11.87	12.18	12.49	12.80	13.12
	18”	8.36	8.35	8.32	8.36	8.41	8.47	8.57	8.71	8.84	9.02	9.21	9.42	9.65	9.88	10.13	10.38	10.65	10.94	11.27	11.57	11.89	12.20	12.51	12.83	13.14
	Longitudinal rib spacing = 18”																									
Transverse rib spacing (in.)	36”	8.35	8.34	8.31	8.35	8.39	8.45	8.55	8.69	8.82	8.99	9.18	9.39	9.62	9.85	10.09	10.34	10.61	10.90	11.22	11.53	11.83	12.14	12.45	12.77	13.08
	33”	8.35	8.34	8.31	8.35	8.39	8.46	8.55	8.69	8.82	8.99	9.18	9.39	9.62	9.85	10.10	10.35	10.62	10.90	11.23	11.53	11.84	12.15	12.46	12.77	13.09
	30”	8.36	8.34	8.31	8.35	8.40	8.46	8.56	8.69	8.83	9.00	9.19	9.40	9.63	9.86	10.10	10.35	10.62	10.91	11.23	11.54	11.85	12.16	12.47	12.78	13.10
	27”	8.36	8.34	8.32	8.36	8.40	8.46	8.56	8.69	8.83	9.00	9.19	9.40	9.63	9.86	10.11	10.36	10.63	10.92	11.24	11.55	11.86	12.17	12.48	12.79	13.11
	24”	8.36	8.35	8.32	8.36	8.40	8.47	8.56	8.70	8.84	9.01	9.20	9.41	9.64	9.87	10.12	10.37	10.64	10.93	11.25	11.56	11.87	12.18	12.49	12.81	13.12
	21”	8.36	8.35	8.32	8.36	8.41	8.47	8.57	8.71	8.84	9.02	9.21	9.42	9.65	9.88	10.13	10.38	10.65	10.94	11.27	11.57	11.89	12.20	12.51	12.83	13.14
	18”	8.37	8.36	8.33	8.37	8.41	8.48	8.58	8.71	8.85	9.03	9.22	9.43	9.66	9.89	10.14	10.40	10.67	10.96	11.28	11.59	11.91	12.22	12.53	12.85	13.17

Table 14. The negative moment demand for waffle deck panel at strength-I limit state.

Girder Spacing →		Design negative moment values for UHPC waffle deck panel (kip-ft/ft)																								
		4’-0”	4’-3”	4’-6”	4’-9”	5’-0”	5’-3”	5’-6”	5’-9”	6’-0”	6’-3”	6’-6”	6’-9”	7’-0”	7’-3”	7’-6”	7’-9”	8’-0”	8’-3”	8’-6”	8’-9”	9’-0”	9’-3”	9’-6”	9’-9”	10’
	Longitudinal rib spacing = 36”																									
Transverse rib spacing (in.)	36”	3.77	4.11	4.70	5.29	5.83	6.33	6.81	7.26	7.67	8.05	8.39	8.72	9.51	9.78	10.03	10.26	10.49	10.68	10.86	11.04	11.20	11.35	11.89	12.53	13.17
	33”	3.77	4.11	4.71	5.29	5.84	6.33	6.81	7.26	7.67	8.05	8.40	8.72	9.51	9.79	10.03	10.26	10.49	10.69	10.87	11.05	11.21	11.36	11.89	12.53	13.17
	30”	3.77	4.11	4.71	5.29	5.84	6.33	6.82	7.26	7.67	8.05	8.40	8.73	9.51	9.79	10.04	10.27	10.50	10.69	10.87	11.05	11.22	11.37	11.90	12.54	13.18
	27”	3.78	4.11	4.71	5.29	5.84	6.34	6.82	7.27	7.68	8.06	8.40	8.73	9.52	9.80	10.04	10.27	10.50	10.70	10.88	11.06	11.23	11.38	11.91	12.55	13.20
	24”	3.78	4.11	4.71	5.30	5.84	6.34	6.82	7.27	7.68	8.06	8.41	8.74	9.53	9.81	10.05	10.28	10.51	10.71	10.89	11.07	11.24	11.39	11.92	12.57	13.21
	21”	3.78	4.12	4.72	5.30	5.85	6.35	6.83	7.28	7.69	8.07	8.42	8.75	9.54	9.82	10.06	10.29	10.53	10.72	10.90	11.09	11.25	11.40	11.94	12.58	13.23
	18”	3.79	4.12	4.72	5.31	5.86	6.35	6.84	7.29	7.70	8.08	8.43	8.76	9.55	9.83	10.08	10.31	10.54	10.74	10.92	11.11	11.27	11.43	11.96	12.61	13.25
	Longitudinal rib spacing = 33”																									
Transverse rib spacing (in.)	36”	3.77	4.11	4.71	5.29	5.84	6.33	6.81	7.26	7.67	8.05	8.40	8.72	9.51	9.79	10.03	10.26	10.49	10.69	10.87	11.05	11.21	11.36	11.89	12.53	13.17
	33”	3.77	4.11	4.71	5.29	5.84	6.33	6.81	7.26	7.67	8.05	8.40	8.73	9.51	9.79	10.04	10.27	10.50	10.69	10.87	11.05	11.22	11.37	11.90	12.54	13.18
	30”	3.78	4.11	4.71	5.29	5.84	6.34	6.82	7.26	7.68	8.06	8.40	8.73	9.52	9.80	10.04	10.27	10.50	10.70	10.88	11.06	11.22	11.37	11.91	12.55	13.19
	27”	3.78	4.11	4.71	5.29	5.84	6.34	6.82	7.27	7.68	8.06	8.41	8.74	9.52	9.80	10.05	10.28	10.51	10.71	10.89	11.07	11.23	11.38	11.92	12.56	13.20
	24”	3.78	4.12	4.71	5.30	5.85	6.34	6.83	7.27	7.69	8.07	8.41	8.74	9.53	9.81	10.06	10.29	10.52	10.72	10.90	11.08	11.25	11.40	11.93	12.57	13.22
	21”	3.78	4.12	4.72	5.30	5.85	6.35	6.83	7.28	7.69	8.07	8.42	8.75	9.54	9.82	10.07	10.30	10.53	10.73	10.91	11.09	11.26	11.41	11.95	12.59	13.24
	18”	3.79	4.12	4.72	5.31	5.86	6.36	6.84	7.29	7.70	8.08	8.43	8.76	9.55	9.83	10.08	10.31	10.55	10.75	10.93	11.11	11.28	11.43	11.97	12.62	13.26
	Longitudinal rib spacing = 30”																									
Transverse rib spacing (in.)	36”	3.77	4.11	4.71	5.29	5.84	6.33	6.82	7.26	7.67	8.05	8.40	8.73	9.51	9.79	10.04	10.27	10.50	10.69	10.87	11.05	11.22	11.37	11.90	12.54	13.18
	33”	3.78	4.11	4.71	5.29	5.84	6.34	6.82	7.26	7.68	8.06	8.40	8.73	9.52	9.80	10.04	10.27	10.50	10.70	10.88	11.06	11.22	11.37	11.91	12.55	13.19
	30”	3.78	4.11	4.71	5.29	5.84	6.34	6.82	7.27	7.68	8.06	8.41	8.74	9.52	9.80	10.05	10.28	10.51	10.70	10.88	11.07	11.23	11.38	11.92	12.56	13.20
	27”	3.78	4.11	4.71	5.30	5.85	6.34	6.82	7.27	7.69	8.07	8.41	8.74	9.53	9.81	10.05	10.28	10.51	10.71	10.89	11.08	11.24	11.39	11.93	12.57	13.21
	24”	3.78	4.12	4.72	5.30	5.85	6.35	6.83	7.28	7.69	8.07	8.42	8.75	9.54	9.82	10.06	10.29	10.52	10.72	10.90	11.09	11.25	11.40	11.94	12.58	13.23
	21”	3.78	4.12	4.72	5.30	5.85	6.35	6.83	7.28	7.70	8.08	8.43	8.76	9.54	9.83	10.07	10.30	10.54	10.73	10.92	11.10	11.27	11.42	11.96	12.60	13.25
	18”	3.79	4.13	4.73	5.31	5.86	6.36	6.84	7.29	7.71	8.09	8.44	8.77	9.56	9.84	10.09	10.32	10.55	10.75	10.94	11.12	11.29	11.44	11.98	12.62	13.27
	Longitudinal rib spacing = 27”																									
Transverse rib spacing (in.)	36”	3.78	4.11	4.71	5.29	5.84	6.34	6.82	7.27	7.68	8.06	8.40	8.73	9.52	9.80	10.04	10.27	10.50	10.70	10.88	11.06	11.23	11.38	11.91	12.55	13.20
	33”	3.78	4.11	4.71	5.29	5.84	6.34	6.82	7.27	7.68	8.06	8.41	8.74	9.52	9.80	10.05	10.28	10.51	10.71	10.89	11.07	11.23	11.38	11.92	12.56	13.20
	30”	3.78	4.11	4.71	5.30	5.85	6.34	6.82	7.27	7.69	8.07	8.41	8.74	9.53	9.81	10.05	10.28	10.51	10.71	10.89	11.08	11.24	11.39	11.93	12.57	13.21
	27”	3.78	4.12	4.72	5.30	5.85	6.35	6.83	7.28	7.69	8.07	8.42	8.75	9.53	9.81	10.06	10.29	10.52	10.72	10.90	11.08	11.25	11.40	11.94	12.58	13.22
	24”	3.78	4.12	4.72	5.30	5.85	6.35	6.83	7.28	7.69	8.08	8.42	8.75	9.54	9.82	10.07	10.30	10.53	10.73	10.91	11.10	11.26	11.41	11.95	12.59	13.24
	21”	3.79	4.12	4.72	5.31	5.86	6.36	6.84	7.29	7.70	8.08	8.43	8.76	9.55	9.83	10.08	10.31	10.54	10.74	10.93	11.11	11.28	11.43	11.97	12.61	13.26
	18”	3.79	4.13	4.73	5.31	5.86	6.36	6.85	7.29	7.71	8.09	8.44	8.77	9.56	9.84	10.09	10.33	10.56	10.76	10.94	11.13	11.30	11.45	11.99	12.64	13.28

Table 14. The negative moment demand for waffle deck panel at strength-I limit state, continued.

Girder Spacing →		Design negative moment values due to dead load (kip-ft/ft)																								
		4’-0”	4’-3”	4’-6”	4’-9”	5’-0”	5’-3”	5’-6”	5’-9”	6’-0”	6’-3”	6’-6”	6’-9”	7’-0”	7’-3”	7’-6”	7’-9”	8’-0”	8’-3”	8’-6”	8’-9”	9’-0”	9’-3”	9’-6”	9’-9”	10’
	Longitudinal rib spacing = 24”																									
Transverse rib spacing (in.)	36”	3.78	4.11	4.71	5.30	5.84	6.34	6.82	7.27	7.68	8.06	8.41	8.74	9.53	9.81	10.05	10.28	10.51	10.71	10.89	11.07	11.24	11.39	11.92	12.57	13.21
	33”	3.78	4.12	4.71	5.30	5.85	6.34	6.83	7.27	7.69	8.07	8.41	8.74	9.53	9.81	10.06	10.29	10.52	10.72	10.90	11.08	11.25	11.40	11.93	12.57	13.22
	30”	3.78	4.12	4.72	5.30	5.85	6.35	6.83	7.28	7.69	8.07	8.42	8.75	9.54	9.82	10.06	10.29	10.52	10.72	10.90	11.09	11.25	11.40	11.94	12.58	13.23
	27”	3.78	4.12	4.72	5.30	5.85	6.35	6.83	7.28	7.69	8.08	8.42	8.75	9.54	9.82	10.07	10.30	10.53	10.73	10.91	11.10	11.26	11.41	11.95	12.59	13.24
	24”	3.79	4.12	4.72	5.31	5.86	6.35	6.84	7.29	7.70	8.08	8.43	8.76	9.55	9.83	10.08	10.31	10.54	10.74	10.92	11.11	11.27	11.43	11.96	12.61	13.25
	21”	3.79	4.13	4.73	5.31	5.86	6.36	6.84	7.29	7.71	8.09	8.44	8.77	9.56	9.84	10.09	10.32	10.55	10.75	10.94	11.12	11.29	11.44	11.98	12.63	13.27
	18”	3.79	4.13	4.73	5.32	5.87	6.37	6.85	7.30	7.72	8.10	8.45	8.78	9.57	9.85	10.10	10.33	10.57	10.77	10.95	11.14	11.31	11.46	12.00	12.65	13.30
	Longitudinal rib spacing = 21”																									
Transverse rib spacing (in.)	36”	3.78	4.12	4.72	5.30	5.85	6.35	6.83	7.28	7.69	8.07	8.42	8.75	9.54	9.82	10.06	10.29	10.53	10.72	10.90	11.09	11.25	11.40	11.94	12.58	13.23
	33”	3.78	4.12	4.72	5.30	5.85	6.35	6.83	7.28	7.69	8.07	8.42	8.75	9.54	9.82	10.07	10.30	10.53	10.73	10.91	11.09	11.26	11.41	11.95	12.59	13.24
	30”	3.78	4.12	4.72	5.30	5.85	6.35	6.83	7.28	7.70	8.08	8.43	8.76	9.54	9.83	10.07	10.30	10.54	10.73	10.92	11.10	11.27	11.42	11.96	12.60	13.25
	27”	3.79	4.12	4.72	5.31	5.86	6.36	6.84	7.29	7.70	8.08	8.43	8.76	9.55	9.83	10.08	10.31	10.54	10.74	10.93	11.11	11.28	11.43	11.97	12.61	13.26
	24”	3.79	4.13	4.73	5.31	5.86	6.36	6.84	7.29	7.71	8.09	8.44	8.77	9.56	9.84	10.09	10.32	10.55	10.75	10.94	11.12	11.29	11.44	11.98	12.63	13.27
	21”	3.79	4.13	4.73	5.31	5.86	6.36	6.85	7.30	7.71	8.10	8.44	8.78	9.57	9.85	10.10	10.33	10.57	10.77	10.95	11.14	11.31	11.46	12.00	12.64	13.29
	18”	3.80	4.13	4.73	5.32	5.87	6.37	6.86	7.31	7.72	8.11	8.46	8.79	9.58	9.86	10.11	10.35	10.58	10.78	10.97	11.15	11.33	11.48	12.02	12.67	13.32
	Longitudinal rib spacing = 18”																									
Transverse rib spacing (in.)	36”	3.79	4.12	4.72	5.31	5.86	6.35	6.84	7.29	7.70	8.08	8.43	8.76	9.55	9.83	10.08	10.31	10.54	10.74	10.92	11.11	11.27	11.43	11.96	12.61	13.25
	33”	3.79	4.12	4.72	5.31	5.86	6.36	6.84	7.29	7.70	8.08	8.43	8.76	9.55	9.83	10.08	10.31	10.55	10.75	10.93	11.11	11.28	11.43	11.97	12.62	13.26
	30”	3.79	4.13	4.73	5.31	5.86	6.36	6.84	7.29	7.71	8.09	8.44	8.77	9.56	9.84	10.09	10.32	10.55	10.75	10.94	11.12	11.29	11.44	11.98	12.62	13.27
	27”	3.79	4.13	4.73	5.31	5.86	6.36	6.85	7.29	7.71	8.09	8.44	8.77	9.56	9.84	10.09	10.33	10.56	10.76	10.94	11.13	11.30	11.45	11.99	12.64	13.28
	24”	3.79	4.13	4.73	5.32	5.87	6.37	6.85	7.30	7.72	8.10	8.45	8.78	9.57	9.85	10.10	10.33	10.57	10.77	10.95	11.14	11.31	11.46	12.00	12.65	13.30
	21”	3.80	4.13	4.73	5.32	5.87	6.37	6.86	7.31	7.72	8.11	8.46	8.79	9.58	9.86	10.11	10.35	10.58	10.78	10.97	11.15	11.33	11.48	12.02	12.67	13.32
	18”	3.80	4.14	4.74	5.33	5.88	6.38	6.86	7.31	7.73	8.12	8.47	8.80	9.59	9.88	10.13	10.36	10.60	10.80	10.99	11.17	11.35	11.50	12.04	12.69	13.34

FLEXURAL BEHAVIOR OF UHPC MEMBERS

This section presents the basic steps in estimating the flexural resistance of UHPC members with rectangular and T-beam cross-sections containing mild steel reinforcement as the primary flexural reinforcement. The flexural behavior of UHPC members can be obtained using the strain compatibility and equilibrium equations at the section level, similar to the practice used for conventional reinforced concrete members. However, differences in the UHPC material behavior should be taken into account appropriately during the strength estimation.

- UHPC exhibits tensile capacity well past its initial tensile cracking strength, until fiber pullout occurs at a tensile strain (ε_{tu}) of 0.007. This strain value is a conservative estimate for fiber pullout and is recommended for design. As stated in chapter 1, the corresponding limiting tensile strength (f_{tu}) of UHPC is taken as 1.2 ksi.

- UHPC exhibits a linear compressive stress-strain response up to the compression failure beginning at a compressive strain of 0.0032. Thus, the compressive strain at the ultimate limit state (ε_{cu}) is taken as 0.0032 and the corresponding compressive strength (f_{cu}) is taken as 24 ksi (see chapter 1).

Rectangular Cross-Section Behavior

The cracking moment of the section can be estimated using the cross-section properties. Ignoring the contribution of the mild steel reinforcement toward the moment of inertia calculations, figure 26 provides a conservative estimate for the cracking moment of a rectangular section:

$$M_{cr} = (1.2\,\text{ksi})\frac{bh^2}{6} = 0.2bh^2 \text{ (kip-in.); b and h are in inches}$$

Figure 26. Equation. Cracking moment relationship for a rectangular section.

where h = height of the section and b = width of the section.

The strain and stress distribution along the cross-section is shown in figure 27a.

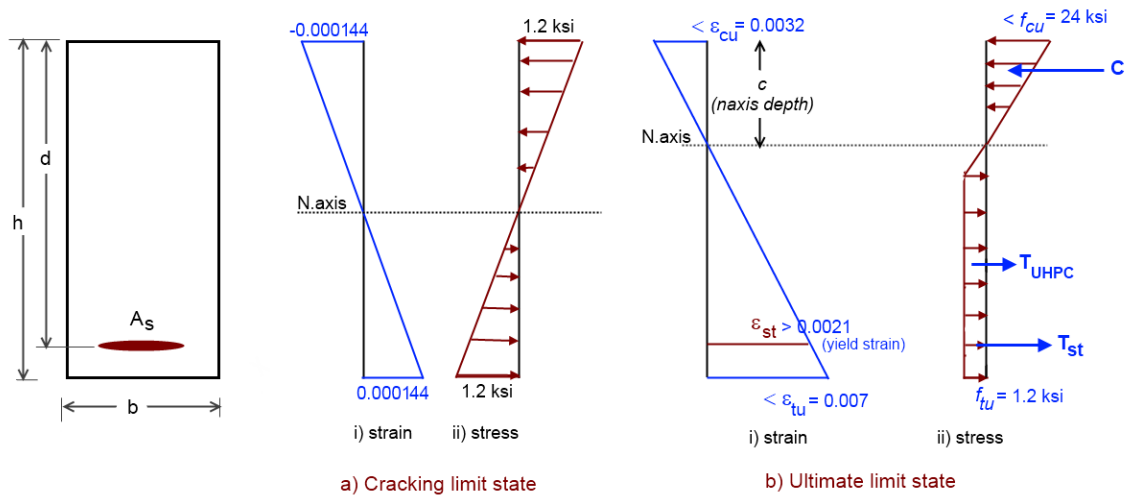

Figure 27. Diagrams. Strain and stress distribution along the cross-section at cracking and ultimate limit states.

The nominal moment capacity for the UHPC beam is estimated when either the extreme compression or tension strain reaches its corresponding limiting value, using the strain compatibility and equilibrium conditions.

At the ultimate limit state, the UHPC compressive force is approximated by a triangular stress distribution and estimated using the equation in figure 28:

$$C = \frac{1}{2} f_c \, c \, b$$

Figure 28. Equation. UHPC compression force.

where c = neutral axis depth and b = width of the beam. The resultant compressive force, C, acts at one-third of the neutral axis depth below the extreme compression fiber of the beam.

A uniform tensile stress of 1.2 ksi may be assumed to act from the neutral axis to the extreme tension fiber when estimating the UHPC tensile force, as shown in figure 27b and given by the equation in figure 29:

$$T_{UHPC} = f_{tu} \, (h - c) b$$

Figure 29. Equation. UHPC tension force.

where h = height of the beam.

From the force equilibrium at the ultimate limit state:

$$C = T_{UHPC} + T_{st} \Rightarrow \frac{1}{2} f_c\, c\, b = f_{tu}\,(h-c)\,b + A_{st}\, f_y$$

Figure 30. Equation. Force equilibrium equation for the rectangular section.

The procedure to determine the nominal moment capacity of a beam usually requires an iterative process and depends on the assumed method of failure (compression or tension control). However, by combining the strain compatibility and equilibrium equations at the ultimate limit state, the equation in figure 31 may be used to determine the controlling limit state.

$$\frac{\rho_s f_y + f_{tu}}{f_{tu} + 0.5 f_{cu}} > 0.314 \text{ then the compression limit state controls}$$

$$\frac{\rho_s f_y + f_{tu}}{f_{tu} + 0.5 f_{cu}} < 0.314 \text{ then the tension limit state controls}$$

$$\frac{\rho_s f_y + f_{tu}}{f_{tu} + 0.5 f_{cu}} = 0.314 \text{ then the compression and tension limit states are simulatenously attained}$$

where, $\rho_s = \frac{A_{st}}{bh}$, f_y is the yield strength of steel, h is height of the beam

A_{st} is the mild steel area.

Figure 31. Equation. Conditions for controlling limit states.

When the compression limit state controls, the neutral axis depth and corresponding moment capacity may be obtained using the equation shown in figure 32.

$$c = \left(\frac{\rho_s f_y + f_{tu}}{f_{tu} + 0.5 f_{cu}} \right) h, \text{ where } f_{tu} = 1.2 \text{ ksi},\ f_{cu} = 24 \text{ ksi and } f_y = 60 \text{ ksi}$$

$$M_n = f_{tu} b (h-c) \left(\frac{3h-c}{6} \right) + \rho_s f_y b h \left(d - \frac{c}{3} \right)$$

Figure 32. Equation. Neutral axis depth and moment capacity for compression limit state.

When the tension limit state controls, the neutral axis depth and the corresponding moment capacity may be obtained using the equation presented in figure 33:

$$c = \left(\frac{\rho_s f_y + f_{tu}}{f_{tu} + 0.0035 E_{UHPC} \left(\frac{c}{h-c} \right)} \right) h$$

where $f_{tu} = 1.2$ ksi, $E_{UHPC} = 7500$ ksi and $f_y = 60$ ksi

$$\mathrm{M}_n = f_{tu} b(h-c)\left(\frac{3h-c}{6} \right) + \rho_s f_y bh \left(d - \frac{c}{3} \right)$$

Figure 33. Equation. Neutral axis depth and moment capacity for tension limit state.

Note that the expression estimating the neutral axis depth requires solving a quadratic equation.

T-Beam Section Behavior

The cracking moment of the T-beam section can be estimated similar to that as the rectangular section. Due to the unsymmetrical cross-section, the values of the positive cracking moment (web in tension) and negative cracking moment (flange in tension) differ significantly from each other. The cracking moment values for the T-beam can be obtained using the equation in figure 34:

$$M_{cr}^{+} = \frac{(1.2\,\text{ksi}) I_{cg}}{y_{cr}^{+}} \text{ and } M_{cr}^{-} = \frac{(1.2\,\text{ksi}) I_{cg}}{y_{cr}^{-}}$$

Figure 34. Equation. Positive and negative cracking moment for T-beam.

The stress profile along the T-beam cross-section at cracking is shown in figure 35.

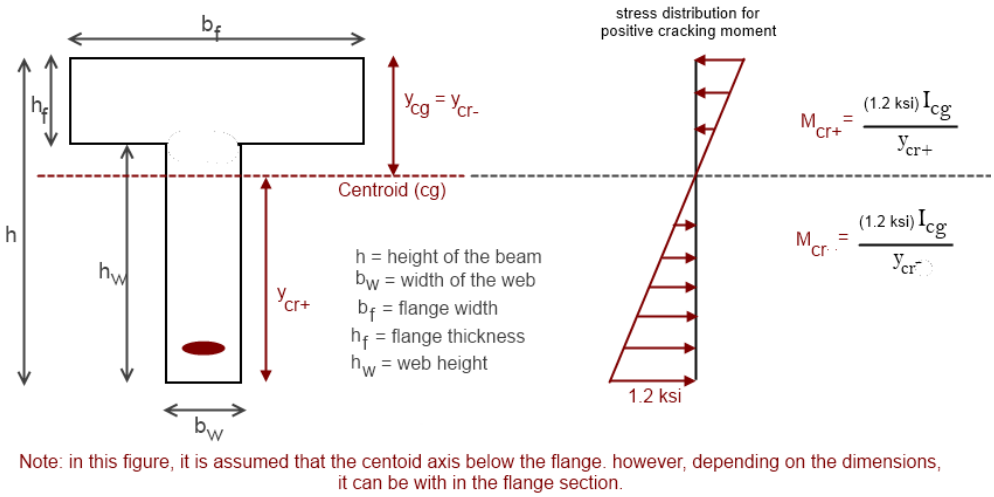

Figure 35. Diagrams. Stress profile for estimating the positive cracking moment of a T-shaped UHPC beam.

Similar to the rectangular cross-section, the nominal moment capacity depends on whether the extreme compression or tension strain reaches its corresponding limiting values. However, with typical T-beam sections used in bridge decks, the flange width is expected to be very large compared to the overall depth of the section. Hence, for practical purposes, the extreme tensile strain in the web section may be assumed to reach its limiting value first when estimating the positive moment (web in tension). In addition, the neutral axis depth will be within the flange section. The corresponding strain and stress distribution across the section under positive moment conditions is shown in figure 36.

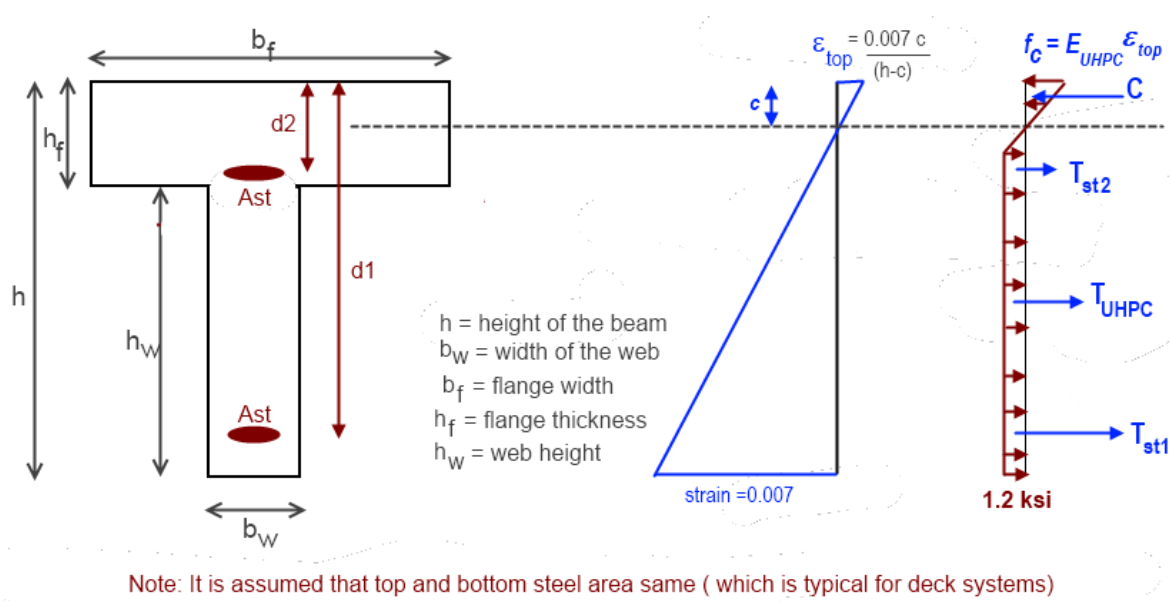

Figure 36. Diagrams. Strain and stress profiles for estimating the positive nominal moment of a T-shaped UHPC beam.

The concrete compressive force, C, is given by the equation in figure 37:

$$C = \frac{1}{2} f_c \, b_f \, c \Rightarrow C = \frac{1}{2}\left(E_{UHPC} \frac{0.007\,c}{h-c} \right) b_f \, c$$

Figure 37. Equation. Concrete compression force.

The tensile force from UHPC in tension may be obtained using the equation in figure 38:

$$T_{UHPC} = f_{tu} \left(b_w h_w + (h_f - c) b_f \right)$$

Figure 38. Equation. UHPC tension force.

From force equilibrium:

$$\frac{1}{2}\left(E_{UHPC} \frac{0.007\,c}{h-c} \right) b_f \, c = f_{tu} \left(b_w h_w + (h_f - c) b_f \right) + A_{st} f_y + A_{st} \left(E_s \frac{0.007\,(d2 - c)}{h-c} \right)$$

Figure 39. Equation. Force equilibrium.

Using the equation in figure 39, neutral axis depth and positive moment capacity can be obtained by taking moments about the neutral axis.

In the case of the ultimate limit state under negative moment conditions (flange in tension), the limiting values for the strain limits can be either tension or compression, depending on the dimensions of the cross-section. Hence, the nominal negative moment capacity should be equal to the smaller of the estimated moment capacities obtained, assuming the two strain limits as controlling parameters independently. The strain and stress distributions across the section for the two negative moment conditions are shown in figure 40.

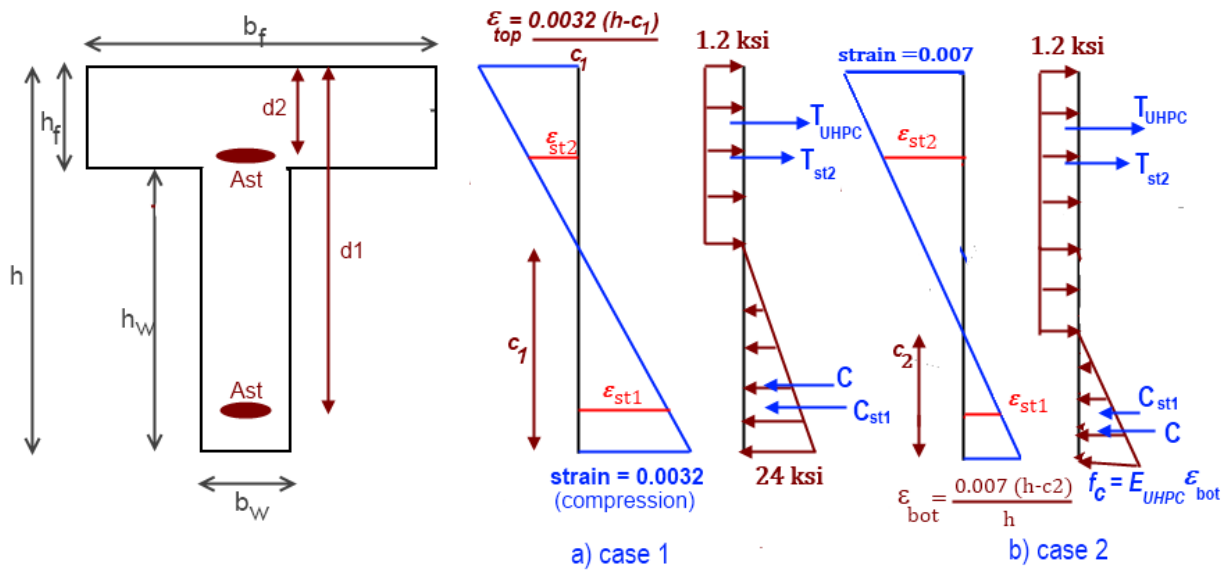

Figure 40. Diagrams. Strain and stress profiles for estimating the negative nominal moment capacity of a T-shaped UHPC beam.

Using the equations presented in table 15, table 16, and the equilibrium condition, the neutral axis depth can be found for both cases. Once the neutral axis depths for both limit cases (c_1 and c_2) are estimated, the moment capacity for the flange in tension can be obtained by taking the moment of the different forces from the top of the flange. The locations of the resultant forces from the top flange are given in tables 15 and 16.

Table 15. T-beam internal forces and their location at ultimate limit state.

Case 1 (Compressive Strain Limit State Controls)	
Forces	**Force Location from Top**
$C = \frac{1}{2} f_{cu}\, b_w c_1$	$h - \frac{c_1}{3}$
$C_{st1} = A_{st} E_s \left(\frac{0.0032\,(c_1 + d_1 - h)}{c_1} \right) \le A_{st} f_y$	d_1
$T_{st2} = A_{st} E_s \left(\frac{0.0032\,(h - c_1 - d_2)}{c_1} \right) \le A_{st} f_y$	d_2
$T_{UHPC} = f_{tu} \left(b_f h_f + b_w (h_w - c_1) \right)$	$\frac{f_{tu} \left(0.5 b_f h_f^2 + b_w (h_w - c_1)(h_f + 0.5(h_w - c_1)) \right)}{T_{UHPC}}$

Table 16. T-beam internal forces and their location at ultimate limit state.

Case 2 (Tension Strain Limit State Controls)	
Forces	**Force Location from Top**
$C = \frac{1}{2}\left(E_{UHPC}\frac{0.007\,c_2}{h-c_2}\right)b_w c_2$	$h - \frac{c_1}{3}$
$C_{st1} = A_{st}E_s\left(\frac{0.007\,(c_2+d_1-h)}{h-c_2}\right) \le A_{st}f_y$	d_1
$T_{st2} = A_{st}E_s\left(\frac{0.007\,(h-c_2-d_2)}{h-c_2}\right) \le A_{st}f_y$	d_2
$T_{UHPC} = f_{tu}\left(b_f h_f + b_w(h_w - c_2)\right)$	$\frac{f_{tu}\left(0.5b_f h_f^2 + b_w(h_w-c_2)(h_f+0.5(h_w-c_2))\right)}{T_{UHPC}}$

WAFFLE DECK PANEL CAPACITY ESTIMATION

The waffle deck panel can be assumed to act like a series of T-beams to resist the dead loads and traffic loads. Moment capacity of the waffle deck panel in the positive and negative bending directions can be estimated using a transverse strip along the deck panel (see figure 41). Depending on the positive and negative bending directions, the equivalent strip width can be arrived at using the AASHTO LRFD Bridge Design Specification 4.6.2.1.3 (see figure 20 and table 4).[27]

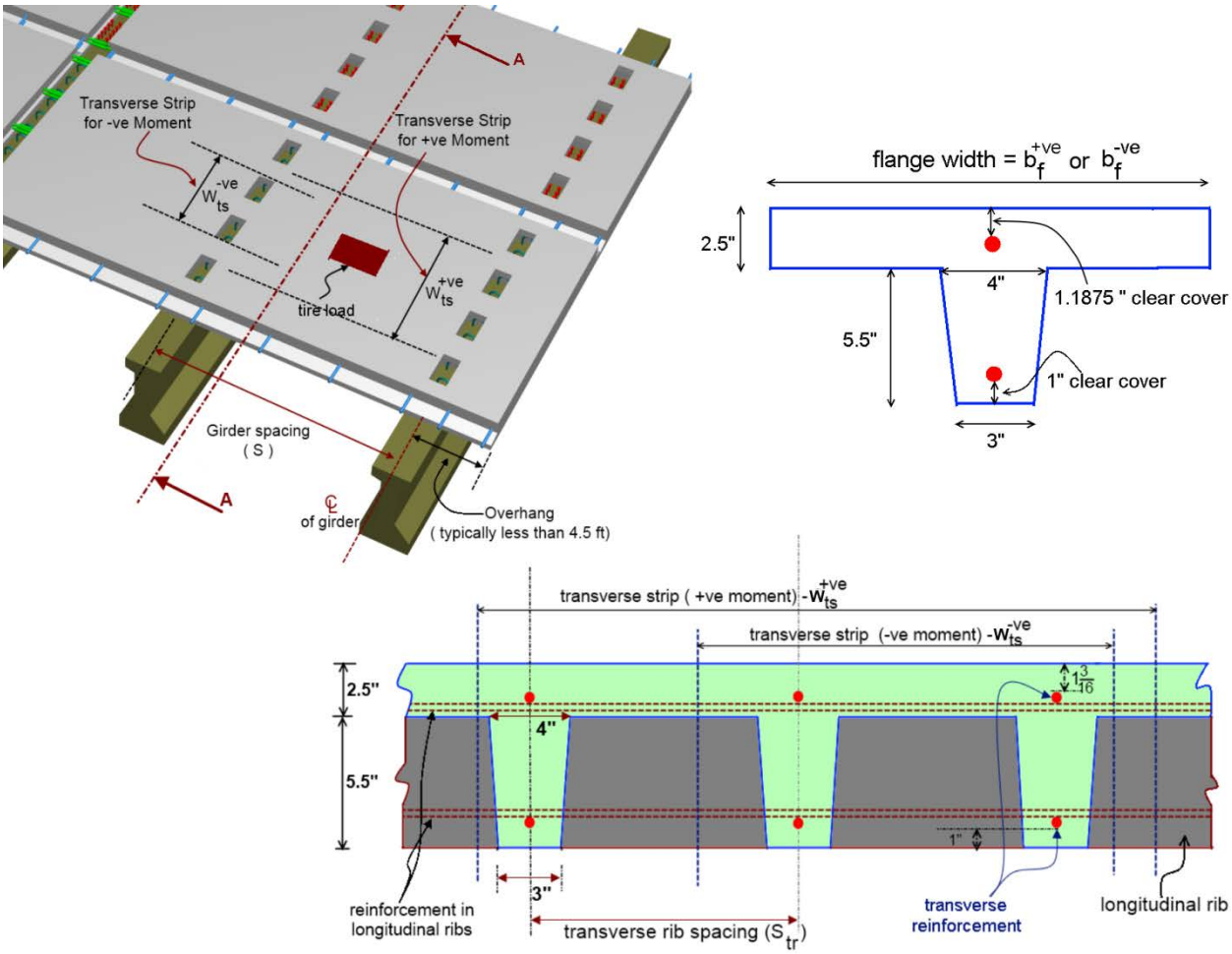

Figure 41. Diagrams. Cross-section of an equivalent strip for positive bending.

As shown in figure 41b, the equivalent strip width contains a number of ribs depending on the girder span and rib spacing in the waffle deck panel. The cross-section of a typical equivalent strip is shown for positive and negative moment locations. The cross-section of the transverse strip can be further divided into a combination of T-beams with a cross-section, as shown in figure 41c. The flange width for positive bending (b_f^{+ve}) or negative bending (b_f^{-ve}) can be estimated using the equation presented in figure 42:

$$b_f^{+ve} = \left(\frac{W_{ts}^{+ve}}{1 + \text{interger value of } \dfrac{W_{ts}^{+ve}}{S_{tr}}} \right) \quad \text{and} \quad b_f^{-ve} = \left(\frac{W_{ts}^{-ve}}{1 + \text{interger value of } \dfrac{W_{ts}^{-ve}}{S_{tr}}} \right)$$

Figure 42. Equation. Flange width of equivalent T-beam for positive and negative bending.

where W_{ts}^{+ve} and W_{ts}^{-ve} = equivalent strip width for positive moment and negative moment regions, respectively, and S_{tr} = transverse rib spacing in the waffle panel. The flange width values for different girder and transverse rib spacing are provided in table 17.

Table 17. Equivalent flange width for the T-section for different girder and rib spacing.

Transverse Rib Spacing →		**Flange Width for Positive Bending (b_f^{+ve})**							**Flange Width for Negative Bending (b_f^{-ve})**						
		36 in.	**33 in.**	**30 in.**	**27 in.**	**24 in.**	**21 in.**	**18 in.**	**36 in.**	**33 in.**	**30 in.**	**27 in.**	**24 in.**	**21 in.**	**18 in.**
Girder Spacing (ft-in.) →	4'-0"	26.20	26.20	26.20	26.20	17.47	17.47	17.47	30.00	30.00	20.00	20.00	20.00	20.00	15.00
	4'-3"	27.03	27.03	27.03	18.02	18.02	18.02	13.51	30.38	30.38	20.25	20.25	20.25	20.25	15.19
	4'-6"	27.85	27.85	27.85	18.57	18.57	18.57	13.93	30.75	30.75	20.50	20.50	20.50	20.50	15.38
	4'-9"	28.68	28.68	28.68	19.12	19.12	19.12	14.34	31.13	31.13	20.75	20.75	20.75	20.75	15.56
	5'-0"	29.50	29.50	29.50	19.67	19.67	19.67	14.75	31.50	31.50	21.00	21.00	21.00	15.75	15.75
	5'-3"	30.33	30.33	20.22	20.22	20.22	20.22	15.16	31.88	31.88	21.25	21.25	21.25	15.94	15.94
	5'-6"	31.15	31.15	20.77	20.77	20.77	20.77	15.58	32.25	32.25	21.50	21.50	21.50	16.13	16.13
	5'-9"	31.98	31.98	21.32	21.32	21.32	15.99	15.99	32.63	32.63	21.75	21.75	21.75	16.31	16.31
	6'-0"	32.80	32.80	21.87	21.87	21.87	16.40	16.40	33.00	22.00	22.00	22.00	22.00	16.50	16.50
	6'-3"	33.63	22.42	22.42	22.42	22.42	16.81	16.81	33.38	22.25	22.25	22.25	22.25	16.69	16.69
	6'-6"	34.45	22.97	22.97	22.97	22.97	17.23	17.23	33.75	22.50	22.50	22.50	22.50	16.88	16.88
	6'-9"	35.28	23.52	23.52	23.52	23.52	17.64	17.64	34.13	22.75	22.75	22.75	22.75	17.06	17.06
	7'-0"	24.07	24.07	24.07	24.07	18.05	18.05	14.44	34.50	23.00	23.00	23.00	23.00	17.25	17.25
	7'-3"	24.62	24.62	24.62	24.62	18.46	18.46	14.77	34.88	23.25	23.25	23.25	23.25	17.44	17.44
	7'-6"	25.17	25.17	25.17	25.17	18.88	18.88	15.10	35.25	23.50	23.50	23.50	23.50	17.63	17.63
	7'-9"	25.72	25.72	25.72	25.72	19.29	19.29	15.43	35.63	23.75	23.75	23.75	23.75	17.81	17.81
	8'-0"	26.27	26.27	26.27	26.27	19.70	19.70	15.76	24.00	24.00	24.00	24.00	18.00	18.00	14.40
	8'-3"	26.82	26.82	26.82	26.82	20.11	20.11	16.09	24.25	24.25	24.25	24.25	18.19	18.19	14.55
	8'-6"	27.37	27.37	27.37	20.53	20.53	20.53	16.42	24.50	24.50	24.50	24.50	18.38	18.38	14.70
	8'-9"	27.92	27.92	27.92	20.94	20.94	20.94	16.75	24.75	24.75	24.75	24.75	18.56	18.56	14.85
	9'-0"	28.47	28.47	28.47	21.35	21.35	17.08	17.08	25.00	25.00	25.00	25.00	18.75	18.75	15.00
	9'-3"	29.02	29.02	29.02	21.76	21.76	17.41	17.41	25.25	25.25	25.25	25.25	18.94	18.94	15.15
	9'-6"	29.57	29.57	29.57	22.18	22.18	17.74	17.74	25.50	25.50	25.50	25.50	19.13	19.13	15.30
	9'-9"	30.12	30.12	22.59	22.59	22.59	18.07	15.06	25.75	25.75	25.75	25.75	19.31	19.31	15.45
	10'-0"	30.67	30.67	23.00	23.00	23.00	18.40	15.33	26.00	26.00	26.00	26.00	19.50	19.50	15.60

The positive and negative bending moment capacity for the cross-section can be estimated using the strain compatibility approach described above.

Validation of Proposed Method

The proposed method was validated using the experimental data from the laboratory testing of waffle deck panel systems. The tests were performed at ISU as part of the FHWA HfL program. Figure 43 shows the cross-section ad reinforcement details of the transverse rib.

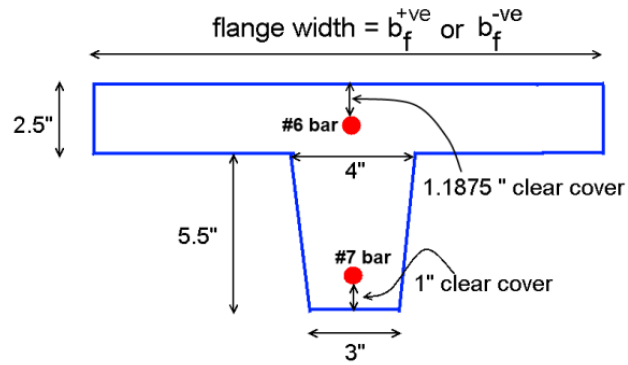

Figure 43. Diagram. Details of an equivalent transverse rib in the positive bending strip.

The test specimen details are as follows:

- Girder spacing (S) = 7 ft 4 in. (7.33 ft).
- Transverse rib spacing (S_{tr}) = 21.5 in.
- Transverse strip for positive bending (W_{ts}^{+ve}) = 26 + 6.6 S = 26 +6.6 (7.33) = 74.4 in. (=6.2 ft).
- Maximum load applied in laboratory testing before significant cracking occurred = 160 kips.
- Maximum bending moment applied = $\frac{160 \text{ kips } (7.33 \text{ ft})}{8} = 146.6 \text{ kip-ft}$.
- Flange width of the T-beam for positive bending (b_f^{+ve}) = 74.4 in. / {1+ integer value of (74.4/21.5)} = 74.4 / (1+3) = 18.6 in.
- The centroid location for positive bending = 2.43 in. from top of the flange.
- Positive moment demand under truck load of 21.3 kips = $\frac{21.3 \text{ kips } (7.33 \text{ ft})}{8} = 19.5 \text{ kip-ft}$.
- Cracking moment of the T-section = $\frac{(1.2 \text{ ksi})\,(285.3 \text{ in}^4)}{5.57 \text{ in.}} = 61.46 \text{ kip-in} = 5.12 \text{ kip-ft}$.
- Cracking moment of the transverse strip = $\frac{(W_{ts}^{+ve})\,(\text{T-section cracking capacity})}{(b_f^{+ve})} = \frac{74.4 \text{ in. } (5.12 \text{ k-ft})}{18.6 \text{ in.}} = 20.48 \text{ kip-ft}$.
- Using the strain compatibility approach, the neutral axis depth for positive bending when tensile strain at the bottom of the rib reached 0.007 = 1.174 in.
- The moment capacity of T-section = 27.08 kip-ft.
- The estimated positive moment capacity of the transverse strip = {(W_{ts}^{+ve})/ (b_f^{+ve})} × T-section capacity = (74.4/18.6) × (27.08) kip-ft =108.32 kip-ft.

It is clear from these calculations that the moment capacity estimated using the proposed procedure is 74 percent of the moment applied without failing the deck panel. The discrepancy between the observed and calculated values is expected, as the AASHTO recommendations for the equivalent strip width are conservative. In addition, the proposed method ignores the contribution of longitudinal ribs in the load-carrying capacity. Therefore, the proposed procedure results in a conservative estimate of the deck panel capacity and can be used confidently for the design of deck panels.

Estimation of Moment Capacity of Waffle Panel

The moment capacity of a waffle deck panel in the positive and negative bending directions for different girder spacing and transverse rib spacing configurations is estimated using the procedure outlined earlier in this chapter. In addition, the effect of varying the reinforcement in the transverse rib section is investigated by considering two different rebar sizes (#6 bar diameter = 0.75 in. and #7 bar diameter = 0.875 in.). All of the mild steel reinforcement is assumed to have yield strength of 60 ksi. The cross-sections considered with different reinforcement are shown in figure 44 and denoted by UWD6T6B and UWD6T7B.

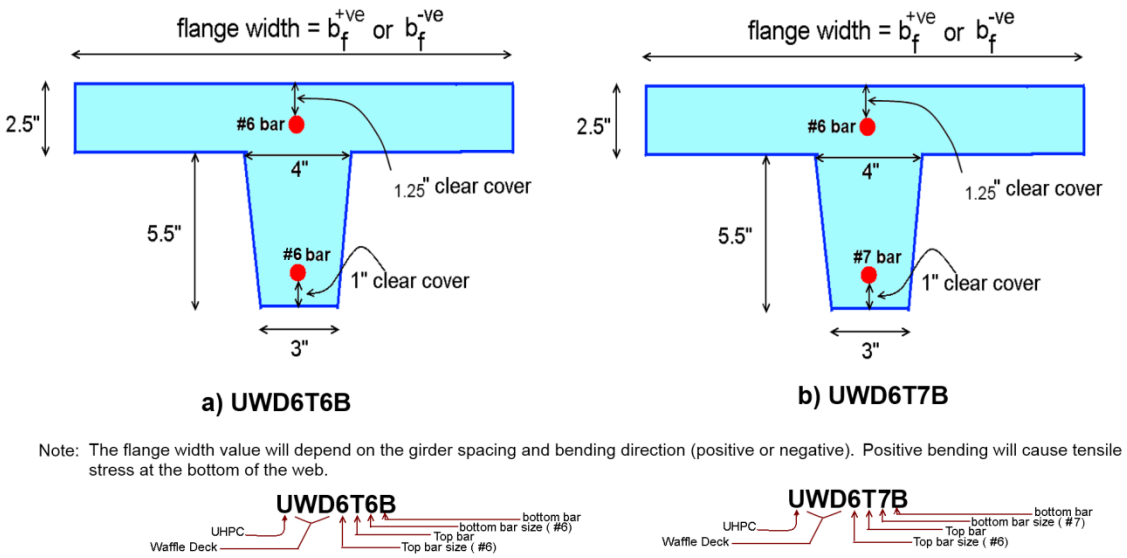

Figure 44. Diagrams. The details of cross-sections considered for transverse ribs.

The nominal moment capacities for the two cross-sections for different girder and transverse rib spacing using the strain compatibility method are presented in table 18 and table 19.

Table 18. Cracking and nominal moment capacity for UWP6T7B in kip-ft/ft.

Transverse Rib Spacing →	Cracking Moment Capacity (+ve Bending)							Nominal Moment Capacity (+ve Bending)							Cracking moment (-ve Bending)							Nominal Moment Capacity (-ve Bending)						
Girder Spacing (ft-in.) →	36”	33”	30”	27”	24”	21”	18”	36”	33”	30”	27”	24”	21”	18”	36”	33”	30”	27”	24”	21”	18”	36”	33”	30”	27”	24”	21”	18”
4’-0”	2.38	2.38	2.38	2.38	3.34	3.34	3.34	14.06	14.06	14.06	14.06	18.60	18.60	18.60	6.21	6.21	7.28	7.28	7.28	7.28	8.06	24.55	24.55	28.42	28.42	28.42	28.42	32.19
4’-3”	2.32	2.32	2.32	3.26	3.26	3.26	4.14	13.79	13.79	13.79	18.18	18.18	18.18	22.56	6.17	6.17	7.25	7.25	7.25	7.25	8.03	24.48	24.48	28.26	28.26	28.26	28.26	32.00
4’-6”	2.26	2.26	2.26	3.18	3.18	3.18	4.04	13.52	13.52	13.52	17.79	17.79	17.79	22.04	6.14	6.14	7.22	7.22	7.22	7.22	7.99	24.38	24.38	28.15	28.15	28.15	28.15	31.81
4’-9”	2.21	2.21	2.21	3.10	3.10	3.10	3.94	13.28	13.28	13.28	17.43	17.43	17.43	21.55	6.11	6.11	7.18	7.18	7.18	7.18	7.96	24.28	24.28	28.01	28.01	28.01	28.01	31.67
5’-0”	2.15	2.15	2.15	3.03	3.03	3.03	3.85	13.05	13.05	13.05	17.08	17.08	17.08	21.09	6.08	6.08	7.15	7.15	7.15	7.93	7.93	24.19	24.19	27.86	27.86	27.86	31.49	31.49
5’-3”	2.11	2.11	2.96	2.96	2.96	2.96	3.76	12.83	12.83	16.75	16.75	16.75	16.75	20.66	6.05	6.05	7.12	7.12	7.12	7.90	7.90	24.10	24.10	27.76	27.76	27.76	31.32	31.32
5’-6”	2.06	2.06	2.89	2.89	2.89	2.89	3.68	12.62	12.62	16.44	16.44	16.44	16.44	20.24	6.02	6.02	7.09	7.09	7.09	7.86	7.86	24.01	24.01	27.63	27.63	27.63	31.15	31.15
5’-9”	2.01	2.01	2.83	2.83	2.83	3.60	3.60	12.42	12.42	16.14	16.14	16.14	19.85	19.85	5.99	5.99	7.06	7.06	7.06	7.83	7.83	23.93	23.93	27.50	27.50	27.50	30.98	30.98
6’-0”	1.97	1.97	2.77	2.77	2.77	3.53	3.53	12.23	12.23	15.86	15.86	15.86	19.48	19.48	5.96	7.03	7.03	7.03	7.03	7.80	7.80	23.85	27.37	27.37	27.37	27.37	30.82	30.82
6’-3”	1.93	2.71	2.71	2.71	2.71	3.45	3.45	12.05	15.60	15.60	15.60	15.60	19.13	19.13	5.93	7.00	7.00	7.00	7.00	7.77	7.77	23.77	27.25	27.25	27.25	27.25	30.67	30.67
6’-6”	1.89	2.66	2.66	2.66	2.66	3.38	3.38	11.88	15.34	15.34	15.34	15.34	18.79	18.79	5.90	6.97	6.97	6.97	6.97	7.74	7.74	23.69	27.13	27.13	27.13	27.13	30.51	30.51
6’-9”	1.86	2.61	2.61	2.61	2.61	3.32	3.32	11.72	15.10	15.10	15.10	15.10	18.47	18.47	5.87	6.94	6.94	6.94	6.94	7.71	7.71	23.62	27.05	27.05	27.05	27.05	30.36	30.36
7’-0”	2.56	2.56	2.56	2.56	3.25	3.25	3.92	14.87	14.87	14.87	14.87	18.16	18.16	21.44	5.85	6.91	6.91	6.91	6.91	7.68	7.68	23.55	26.94	26.94	26.94	26.94	30.22	30.22
7’-3”	2.51	2.51	2.51	2.51	3.19	3.19	3.85	14.65	14.65	14.65	14.65	17.87	17.87	21.07	5.82	6.88	6.88	6.88	6.88	7.65	7.65	23.45	26.83	26.83	26.83	26.83	30.08	30.08
7’-6”	2.46	2.46	2.46	2.46	3.13	3.13	3.78	14.44	14.44	14.44	14.44	17.58	17.58	20.72	5.79	6.85	6.85	6.85	6.85	7.62	7.62	23.39	26.72	26.72	26.72	26.72	29.94	29.94
7’-9”	2.42	2.42	2.42	2.42	3.08	3.08	3.71	14.23	14.23	14.23	14.23	17.32	17.32	20.39	5.76	6.82	6.82	6.82	6.82	7.60	7.60	23.33	26.61	26.61	26.61	26.61	29.81	29.81
8’-0”	2.37	2.37	2.37	2.37	3.02	3.02	3.64	14.04	14.04	14.04	14.04	17.06	17.06	20.07	6.80	6.80	6.80	6.80	7.57	7.57	8.17	26.51	26.51	26.51	26.51	29.68	29.68	32.81
8’-3”	2.33	2.33	2.33	2.33	2.97	2.97	3.58	13.85	13.85	13.85	13.85	16.81	16.81	19.76	6.77	6.77	6.77	6.77	7.54	7.54	8.14	26.41	26.41	26.41	26.41	29.55	29.55	32.69
8’-6”	2.29	2.29	2.29	2.92	2.92	2.92	3.52	13.68	13.68	13.68	16.57	16.57	16.57	19.46	6.74	6.74	6.74	6.74	7.51	7.51	8.11	26.32	26.32	26.32	26.32	29.43	29.43	32.52
8’-9”	2.26	2.26	2.26	2.87	2.87	2.87	3.46	13.50	13.50	13.50	16.35	16.35	16.35	19.18	6.71	6.71	6.71	6.71	7.48	7.48	8.09	26.23	26.23	26.23	26.23	29.30	29.30	32.35
9’-0”	2.22	2.22	2.22	2.83	2.83	3.41	3.41	13.34	13.34	13.34	16.13	16.13	18.90	18.90	6.69	6.69	6.69	6.69	7.46	7.46	8.06	26.13	26.13	26.13	26.13	29.19	29.19	32.19
9’-3”	2.18	2.18	2.18	2.78	2.78	3.35	3.35	13.18	13.18	13.18	15.91	15.91	18.64	18.64	6.66	6.66	6.66	6.66	7.43	7.43	8.03	26.01	26.01	26.01	26.01	29.07	29.07	32.04
9’-6”	2.15	2.15	2.15	2.74	2.74	3.30	3.30	13.03	13.03	13.03	15.71	15.71	18.39	18.39	6.63	6.63	6.63	6.63	7.40	7.40	8.01	25.93	25.93	25.93	25.93	28.96	28.96	31.88
9’-9”	2.12	2.12	2.69	2.69	2.69	3.25	3.79	12.88	12.88	15.52	15.52	15.52	18.14	20.76	6.61	6.61	6.61	6.61	7.38	7.38	7.98	25.84	25.84	25.84	25.84	28.81	28.81	31.78
10’-0”	2.09	2.09	2.65	2.65	2.65	3.20	3.73	12.74	12.74	15.33	15.33	15.33	17.91	20.48	6.58	6.58	6.58	6.58	7.35	7.35	7.95	25.76	25.76	25.76	25.76	28.70	28.70	31.64

Note: All the moment capacity values are in **Kip-ft/ft**

Table 19. Cracking and nominal moment capacity for UWP6T6B in kip-ft/ft.

Transverse Rib Spacing →	Cracking Moment Capacity (+ve Bending)							Nominal Moment Capacity (+ve Bending)							Cracking moment (-ve Bending)							Nominal Moment Capacity (-ve Bending)						
Girder Spacing (ft.in.) →	36”	33”	30”	27”	24”	21”	18”	36”	33”	30”	27”	24”	21”	18”	36”	33”	30”	27”	24”	21”	18”	36”	33”	30”	27”	24”	21”	18”
4’-0”	2.50	2.50	2.50	2.50	3.52	3.52	3.52	12.00	12.00	12.00	12.00	15.52	15.52	15.52	6.52	6.52	7.66	7.66	7.66	7.66	8.48	24.65	24.65	28.55	28.55	28.55	28.55	32.33
4’-3”	2.44	2.44	2.44	3.43	3.43	3.43	4.36	11.79	11.79	11.79	15.19	15.19	15.19	18.59	6.49	6.49	7.63	7.63	7.63	7.63	8.45	24.57	24.57	28.42	28.42	28.42	28.42	32.17
4’-6”	2.38	2.38	2.38	3.34	3.34	3.34	4.25	11.59	11.59	11.59	14.89	14.89	14.89	18.19	6.46	6.46	7.59	7.59	7.59	7.59	8.41	24.46	24.46	28.26	28.26	28.26	28.26	31.97
4’-9”	2.32	2.32	2.32	3.26	3.26	3.26	4.15	11.39	11.39	11.39	14.61	14.61	14.61	17.81	6.42	6.42	7.56	7.56	7.56	7.56	8.38	24.39	24.39	28.14	28.14	28.14	28.14	31.83
5’-0”	2.26	2.26	2.26	3.19	3.19	3.19	4.05	11.21	11.21	11.21	14.34	14.34	14.34	17.45	6.39	6.39	7.53	7.53	7.53	8.34	8.34	24.29	24.29	27.99	27.99	27.99	31.64	31.64
5’-3”	2.21	2.21	3.11	3.11	3.11	3.11	3.96	11.04	11.04	14.08	14.08	14.08	14.08	17.11	6.36	6.36	7.49	7.49	7.49	8.31	8.31	24.19	24.19	27.88	27.88	27.88	31.45	31.45
5’-6”	2.16	2.16	3.04	3.04	3.04	3.04	3.87	10.88	10.88	13.84	13.84	13.84	13.84	16.79	6.32	6.32	7.46	7.46	7.46	8.28	8.28	24.10	24.10	27.74	27.74	27.74	31.32	31.32
5’-9”	2.12	2.12	2.98	2.98	2.98	3.79	3.79	10.73	10.73	13.61	13.61	13.61	16.49	16.49	6.29	6.29	7.43	7.43	7.43	8.24	8.24	24.04	24.04	27.60	27.60	27.60	31.14	31.14
6’-0”	2.07	2.07	2.91	2.91	2.91	3.71	3.71	10.59	10.59	13.40	13.40	13.40	16.20	16.20	6.26	7.39	7.39	7.39	7.39	8.21	8.21	23.95	27.51	27.51	27.51	27.51	30.97	30.97
6’-3”	2.03	2.85	2.85	2.85	2.85	3.63	3.63	10.45	13.19	13.19	13.19	13.19	15.92	15.92	6.23	7.36	7.36	7.36	7.36	8.18	8.18	23.86	27.37	27.37	27.37	27.37	30.81	30.81
6’-6”	1.99	2.80	2.80	2.80	2.80	3.56	3.56	10.32	12.99	12.99	12.99	12.99	15.66	15.66	6.20	7.33	7.33	7.33	7.33	8.15	8.15	23.78	27.28	27.28	27.28	27.28	30.69	30.69
6’-9”	1.95	2.74	2.74	2.74	2.74	3.49	3.49	10.19	12.81	12.81	12.81	12.81	15.41	15.41	6.17	7.30	7.30	7.30	7.30	8.12	8.12	23.70	27.16	27.16	27.16	27.16	30.53	30.53
7’-0”	2.69	2.69	2.69	2.69	3.42	3.42	4.13	12.63	12.63	12.63	12.63	15.18	15.18	17.72	6.14	7.27	7.27	7.27	7.27	8.08	8.08	23.63	27.04	27.04	27.04	27.04	30.38	30.38
7’-3”	2.64	2.64	2.64	2.64	3.36	3.36	4.05	12.46	12.46	12.46	12.46	14.95	14.95	17.43	6.11	7.24	7.24	7.24	7.24	8.05	8.05	23.55	26.92	26.92	26.92	26.92	30.23	30.23
7’-6”	2.59	2.59	2.59	2.59	3.30	3.30	3.98	12.29	12.29	12.29	12.29	14.73	14.73	17.16	6.08	7.21	7.21	7.21	7.21	8.02	8.02	23.48	26.84	26.84	26.84	26.84	30.08	30.08
7’-9”	2.54	2.54	2.54	2.54	3.24	3.24	3.90	12.13	12.13	12.13	12.13	14.52	14.52	16.90	6.05	7.18	7.18	7.18	7.18	7.99	7.99	23.39	26.73	26.73	26.73	26.73	29.94	29.94
8’-0”	2.50	2.50	2.50	2.50	3.18	3.18	3.84	11.98	11.98	11.98	11.98	14.32	14.32	16.65	7.15	7.15	7.15	7.15	7.96	7.96	8.60	26.62	26.62	26.62	26.62	29.80	29.80	32.98
8’-3”	2.45	2.45	2.45	2.45	3.13	3.13	3.77	11.84	11.84	11.84	11.84	14.13	14.13	16.42	7.12	7.12	7.12	7.12	7.93	7.93	8.57	26.52	26.52	26.52	26.52	29.71	29.71	32.80
8’-6”	2.41	2.41	2.41	3.07	3.07	3.07	3.71	11.70	11.70	11.70	13.95	13.95	13.95	16.19	7.09	7.09	7.09	7.09	7.90	7.90	8.54	26.41	26.41	26.41	26.41	29.58	29.58	32.67
8’-9”	2.37	2.37	2.37	3.02	3.02	3.02	3.65	11.57	11.57	11.57	13.77	13.77	13.77	15.97	7.06	7.06	7.06	7.06	7.88	7.88	8.51	26.31	26.31	26.31	26.31	29.45	29.45	32.50
9’-0”	2.33	2.33	2.33	2.97	2.97	3.59	3.59	11.44	11.44	11.44	13.60	13.60	15.75	15.75	7.03	7.03	7.03	7.03	7.85	7.85	8.48	26.22	26.22	26.22	26.22	29.32	29.32	32.33
9’-3”	2.30	2.30	2.30	2.93	2.93	3.53	3.53	11.32	11.32	11.32	13.44	13.44	15.55	15.55	7.00	7.00	7.00	7.00	7.82	7.82	8.45	26.16	26.16	26.16	26.16	29.20	29.20	32.21
9’-6”	2.26	2.26	2.26	2.88	2.88	3.47	3.47	11.20	11.20	11.20	13.28	13.28	15.35	15.35	6.98	6.98	6.98	6.98	7.79	7.79	8.43	26.06	26.06	26.06	26.06	29.08	29.08	32.05
9’-9”	2.23	2.23	2.84	2.84	2.84	3.42	3.98	11.09	11.09	13.13	13.13	13.13	15.16	17.20	6.95	6.95	6.95	6.95	7.76	7.76	8.40	25.97	25.97	25.97	25.97	28.96	28.96	31.90
10’-0”	2.19	2.19	2.79	2.79	2.79	3.37	3.92	10.98	10.98	12.98	12.98	12.98	14.98	16.98	6.92	6.92	6.92	6.92	7.74	7.74	8.37	25.89	25.89	25.89	25.89	28.85	28.85	31.79

Note: All the moment capacity values are in **Kip-ft/ft**

Overhang Design Loads

A review of current bridge deck designs used by several DOTs showed that the overhang length is less than half the girder spacing, with a maximum length of 4 ft 3 in. for typical bridges. As noted in previous sections, an F-shape standard concrete railing is used for designing the overhang region for collision loads. In addition, based on the suggestions from Iowa DOT designers, it is recommended to use a solid cross-section for the overhang region instead of a waffle configuration. The solid section for the overhang will help in addressing the variability in the types of railings and their capacities as used by DOTs, and it will provide adequate space to include the necessary details for attaching the railing to the precast deck. With the selected overhang length and type of railing, it is shown below that the overhang will have adequate capacity to meet the expected design demands.

The overhang region is designed for different combinations of dead, live, and collision loads for the strength-I and extreme event II limit states, as required by the AASHTO guidelines.[27] The critical regions along the deck cross-section for overhang design, sections AA, BB, and CC, are shown in figure 45.

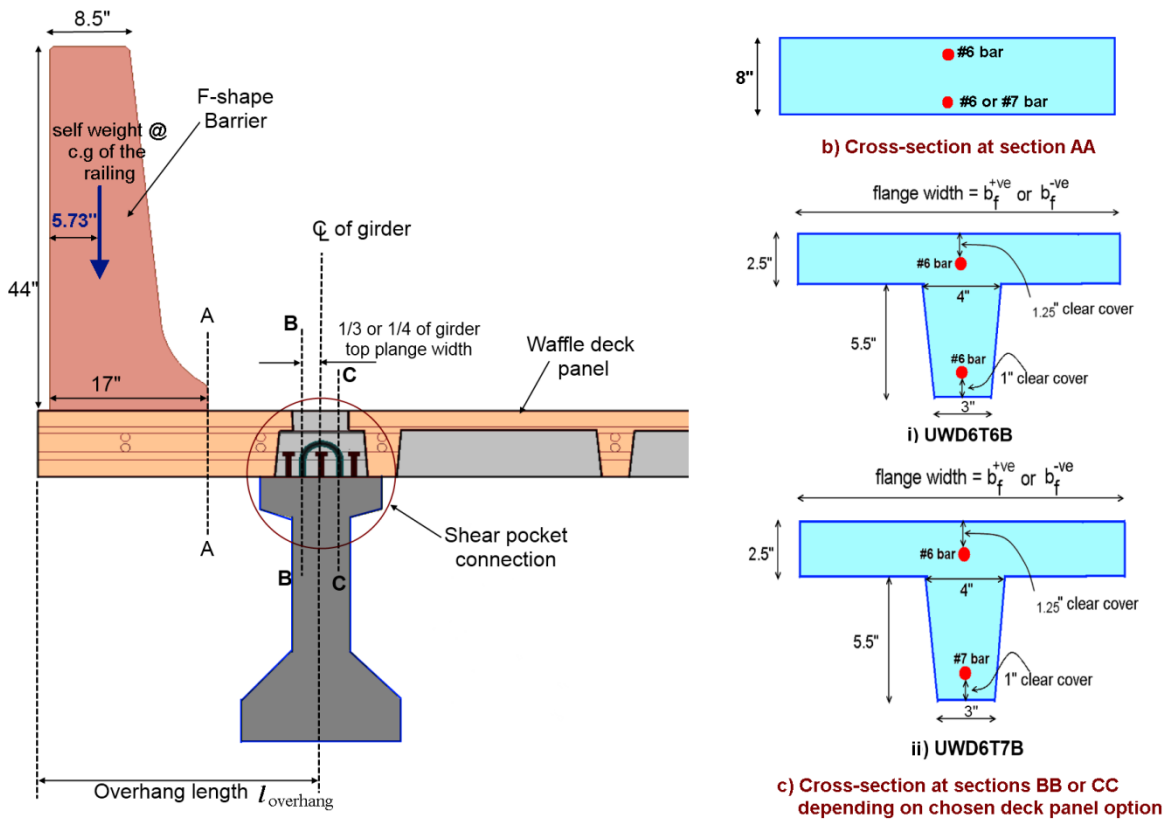

Figure 45. Diagrams. Critical section locations for overhang design and cross-sections of the waffle deck at those locations.

Section AA is located at the interior face of the parapet. Sections BB and CC are located at critical locations used for negative moment design. The AASHTO LRFD Bridge Design Specification section A13.4 is used for finding the different design cases of the overhang. Accordingly, three design cases were considered for completing the overhang design.

Design Case I: Transverse and Longitudinal Collision Forces

Design case I accounts for the transverse and longitudinal forces experienced from a collision on the parapet and the dead load of the structure. This is an extreme event II limit state, and the appropriate load factors are given in table 20.

Table 20. Negative moment demands due to collision forces at critical locations.

	Moment Demand @ Section AA	**Moment Demand @ Section BB**
Parapet self-weight ($w_{parapet}$)* (see table 8)	$w_{parapet}\frac{(17''-5.73'')}{12} = 0.9392\ (0.513)(\text{k-ft})/\text{ft}$ $= 0.482$ k-ft/ft	$= w_{parapet}\frac{(l_{parapet}-3''-5.73'')}{12}$ $= \frac{(51-8.73'')}{12}(0.513)(\text{k-ft})/\text{ft}$ $= 1.81$ k-ft/ft
Self-weight of UHPC overhang ($w_{overhang}$)* ($w_{overhang}$ = 0.105 k/ft for 8 in. solid panel)	$= 0.5\ w_{overhang}\left(\frac{17''}{12}\right)^2$ $= 0.5(0.105)(1.42)^2$ (k-ft)/ft $= 0.105$ k-ft/ft	$= 0.5\ w_{overhang}\left(\frac{(l_{parapet}-3'')}{12}\right)^2$ $= 0.5(0.105)(4)^2$ (k-ft)/ft $= 0.84$ k-ft/ft
Self-weight of wearing surface (w_{ws})* (see figure 22)	none	$= 0.5\ w_{ws}(1\text{ft})\left(\frac{(l_{parapet}-3''-17'')}{12}\right)^2$ $= 0.5(0.023)(2.583)^2$ (k-ft)/ft $= 0.077$ k-ft/ft
Barrier collision moment (M_c)	13.9 k-ft/ft	$= \frac{M_c L_c}{L_c + 2\tan(30^0)\frac{(l_{overhang}-3''-17'')}{12}}$ $= \frac{13.9\text{k-ft/ft}\ (9.7\text{ft})}{9.7\text{ft} + 2\ (0.577)(2.8235\text{ft})}$ $= 10.4$ k-ft/ft
Design Demand	= 1.00 (0.482+0.105)+1.00 (13.9) **= 14.49 k-ft/ft**	= 1.00 (1.81+0.84)+1.00(0.077)+1.00 (10.4) **= 13.13 k-ft/ft**

It should be noted that the moment demand at section CC will be less than that at section BB, thus making the critical moment demand for the T-beam cross-section to be at section BB.

For critical sections away from the parapet edge (e.g., at sections BB and CC), the collision capacity moment of the parapet is dispersed with a distribution angle of 30 degrees. In addition, it is assumed the moments and tension forces resulting from a collision are transmitted and distributed effectively between adjacent UHPC panels.

In addition to the collision moment capacity of the railing, the transverse resistance of the railing (R_w) should be resisted by the deck panel. This force propagates through the face of the parapet, causing direct tension in the deck panel that can be characterized using a yield line failure mechanism. The tension force can be estimated using the equation in figure 46:

$$T = \frac{R_w}{L_c + 2H}$$

Figure 46. Equation. Tension force in deck panel due to collision loading.

where Rw = total transverse resistance of the railing, L_c = critical length of the yield line failure, and H = height of the railing. The R_w and L_c values for standard Iowa DOT F-shaped barriers are presented in table 9.

Design Case II: Vertical Collision Forces

Design case II accounts for the vertical forces experienced from a vehicle overtopping on the railing in conjunction with the dead load of the structure. This is categorized as an extreme event II limit state, and applicable load factors are given in table 5. This design case generally produces much lower negative moments when compared to design cases I and III for overhangs with concrete railings, making this load case not critical for overhang design with concrete railings.

Design Case III: Dead and Live Loads

Design case III examines the presence of a live load represented by a truck wheel load on the overhang region without a collision force and the self-weight of the structure. This is a strength-I limit state, and applicable load factors are given in table 5.

The critical sections for this design case are sections BB and CC, which are the same as the critical locations used for deck negative bending design. As mentioned previously, the locations of the sections BB and CC are conservatively taken as 3 inches from the centerline of the girder (as the minimum width of the top flange, which is 12 inches for typical girders) to estimate the negative moment demand; and, the truck load is located at 12 inches from the barrier rail inside edge as prescribed by AASHTO requirements. The locations of the critical location and tire load are shown in figure 47.

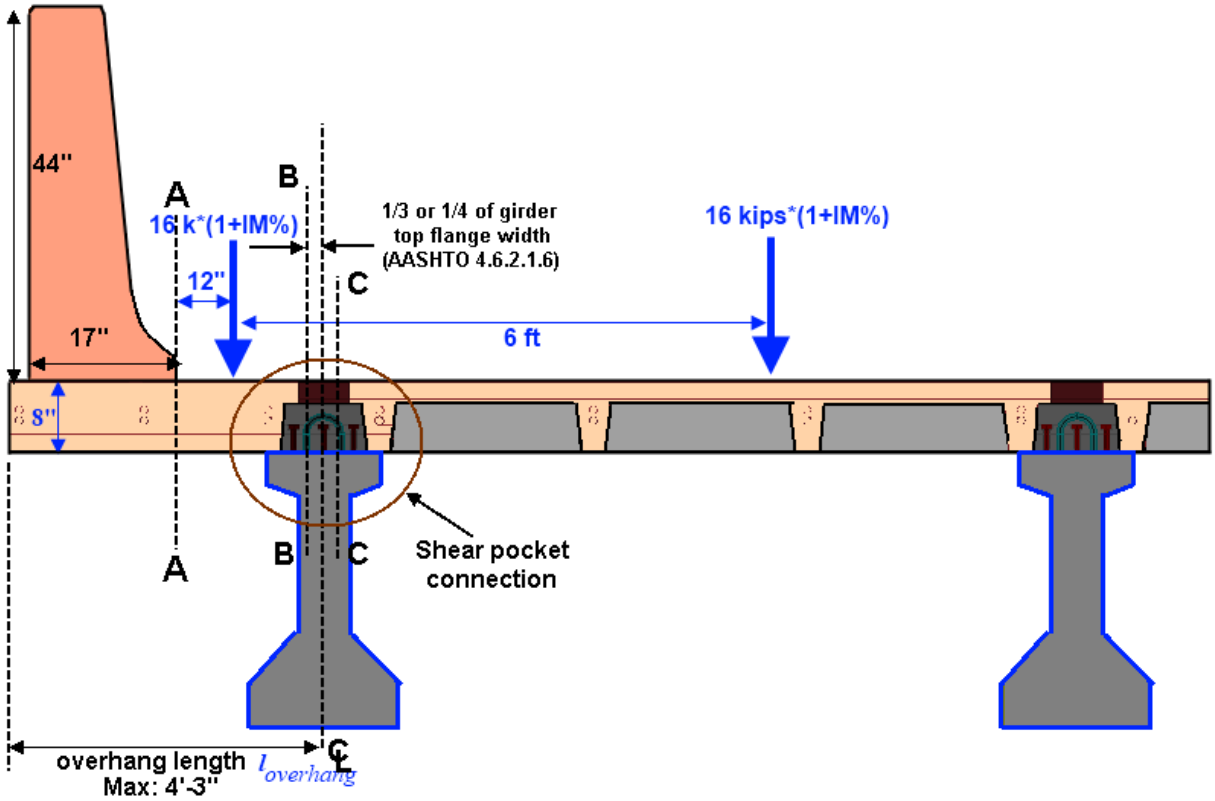

Figure 47. Diagram. Locations of dead and live loads for design case III.

The maximum demand at sections BB and CC under the combined dead load and live load effects for different girder and rib spacing were found to be less than the design demand estimated in design case I.

Overhang Capacity

The negative moment capacities of the deck panel at critical sections BB and CC are estimated during the deck design process and are provided in table 21.

Table 21. Moment capacity of the overhang section for deck panels with two different reinforcement configurations.

Critical Section Shape at Section AA →	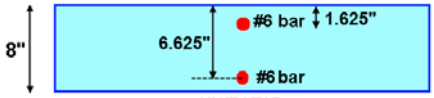 UWP6T6B	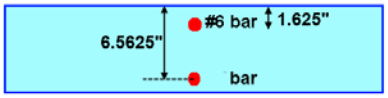 UWP6T7B
Transverse Rib Spacing (in.)	**Negative Moment Capacity (kip-ft/ft)**	**Negative Moment Capacity (kip-ft/ft)**
36	37.64	37.61
33	37.98	38.04
30	38.51	38.46
27	39.03	39.08
24	39.74	39.78
21	40.64	40.67
18	41.83	41.86

The negative moment capacity of the rectangular cross-section at section AA may be estimated using the procedure described earlier in this chapter. The nominal negative moment capacity of the solid deck section for different transverse rib spacing is provided in table 21. It is clear from the table that the moment capacity of the overhang is nearly 225 percent of the demand. Hence, a designer can possibly use a taper for the overhang region between the transverse ribs to optimize the material (UHPC) usage, but this approach may be found to be labor intensive and in violation of the AASHTO LRFD 13.7.3.1.2 section requirement.

CHAPTER 3. CONNECTIONS

INTRODUCTION

As described in chapter 2, full-depth, precast, UHPC waffle deck panels, which exhibit significant advantages over cast-in-place (CIP) bridge deck construction, can be adequately designed to meet design loads stipulated by the AASHTO LRFD Bridge Design Specifications.[27] However, as shown in previous studies on precast deck systems, the short-term and long-term performance of bridges constructed using these deck panels will be influenced by the quality of the connections among the panels (i.e., panel-to-panel connections in both longitudinal and transverse directions) and with panels to girders.[5] Hence, for successful broader application of UHPC waffle deck panels in bridges, increased emphasis must be placed on field-installed connections between deck panels and supporting girders in both longitudinal (parallel to traffic) and transverse (perpendicular to traffic) directions.

In current construction practice, these field-installed connections between deck panels and girders require interlacing of connecting elements such as mild steel reinforcement or headed shear studs extending from the supporting girders and deck panel elements. These approaches often cause fit-up and tolerance issues in the field. The problems can be exacerbated when pre- or post-tensioning is used in both directions of the panels for design. In addition, some studies have reported durability challenges due to field casting of cementitious grout used conventionally in these connections.[5,16]

The combination of these challenges reduces the performance of the connections and, therefore, reduces the performance of the precast deck panel system as a whole. Hence, to make precast UHPC waffle deck panels an economical, attractive, and long-lasting solution for accelerated construction, appropriate connections for the UHPC waffle deck panels must be established. In this context, use of post-tensioning technology is avoided, as this adds additional material and field labor costs. In addition, due to its superior structural and durability characteristics, and to match the durability performance of the waffle deck panels, UHPC is generally recommended in this guide as a fill in the field-cast connection regions. In particular, UHPC shows exceptional bond when placed against previously cast concrete and reduces development length requirements significantly for conventional mild steel reinforcement (see chapter 1). This allows for the development of simplified, less-congested connection details, which are not only construction-friendly but also provide improved long-term performance.

The next sections present several connection details for panel-to-panel (transverse and longitudinal) and panel-to-girder connections that were developed in earlier research projects and used successfully in practice for precast deck panels. These connection details have been obtained from numerous sources, including research performed under the National Cooperative Highway Research Program (NCHRP), FHWA, and the Precast/Prestressed Concrete Institute (PCI), as well as from experimental testing programs completed at ISU.

It is important to note that, in most cases, these connections were developed primarily for full-depth solid precast panels and did not consider UHPC as the fill material in the connection. Hence, a few of these connections may require modifications to incorporate them in UHPC waffle deck panels so that desirable outcomes can be achieved. In addition, the dimensions and reinforcement details of the connection regions may be decreased by taking advantage of the excellent bond and flow characteristics of UHPC. Where appropriate, comments and suggestions for potential improvement of the connection details presented are provided to enhance the performance, constructability, and/or economy of the connection when used with UHPC for the infill material in the connection regions.

PANEL-TO-PANEL CONNECTION DETAILS

Panel-to-panel connection and deck-level connections are critical to transfer loads between the precast deck panels and to distribute the load to different elements of the superstructure. Panel-to-panel connections are subjected to bending moments and vertical shear forces under vehicular loading. Traditionally, precast deck panel edges are provided with details to form a shear key along the connection when two panels are placed together. This detail prevents the relative vertical movement between adjacent panels under traffic load.

In recent decades, a wide variety of deck level connection designs have been deployed in bridge projects involving full-depth precast panels with substantial variance in observed performance under traffic loads. The connections that perform well typically consist of match-cast shear keys with epoxy adhesive or grouted female-to-female joints with discrete reinforcement, combined with field-cast concrete or grouted together with quality construction. In the grouted connections, the interface bond between the precast elements and the grout can help with water tightness of the connections, thereby improving durability.

From recent research conducted by Aaleti et al. and Marcu et al., it was found that the interface bond between normal concrete and UHPC can be improved significantly by introducing roughness or texture at the connection interface.[44,45] According to these studies, sand blasting, shot blasting, or creating a rough surface texture using form liners are options, which may be given consideration in appropriate panel-to-panel connections, for increasing bond characteristics between normal concrete and UHPC.

Based on discussions with representatives from the Iowa DOT and the FHWA, the researchers recommend using details that can utilize field-cast UHPC in connections. Detailed descriptions of a few connections that are appropriate for the waffle deck panel are presented below. In addition, it is recommended that appropriate surface treatment preparation methods should be used to improve the long-term performance of the connections.

Connection 1

This connection detail was developed as part of the FHWA HfL program supporting the development of UHPC waffle deck panel systems for accelerated bridge construction. The

details of the connection, which are shown in figure 48, use 1-inch-diameter dowels bars (epoxy-coated or stainless steel), extending from the panels, spliced together with additional transverse reinforcement and filled with UHPC in the gap.

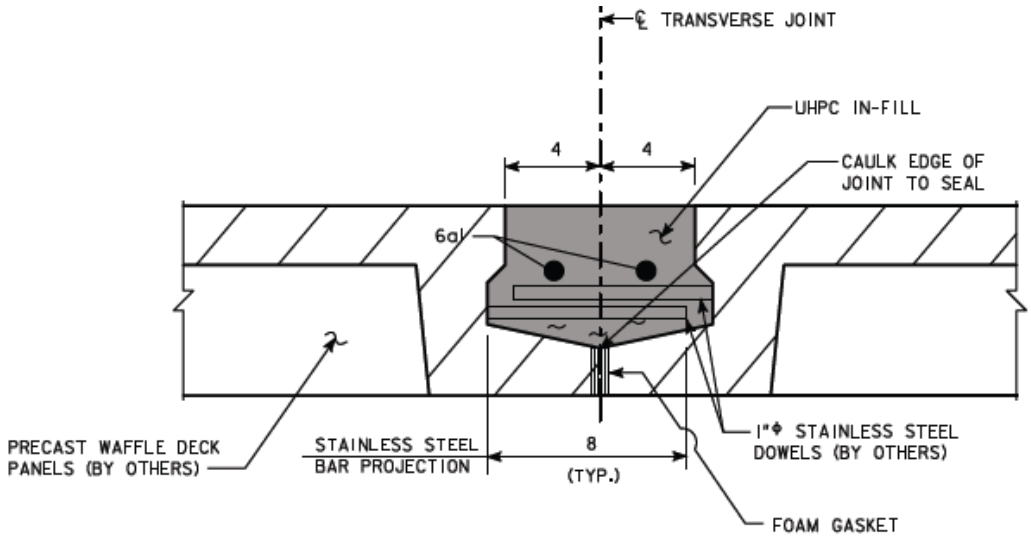

Figure 48. Diagram. Transverse connection detail tested for waffle deck panel at ISU.[40]

The structural performance of this connection was evaluated under simulated traffic loading as part of an experimental study conducted at ISU. A summary of experimental testing is included in chapter 1. More details about the laboratory and field performance of this connection can be found in Aaleti et al.[39]

Connection 2

In a recent study, Graybeal investigated the structural performance of field-cast UHPC connections representing the transverse and longitudinal connections between precast deck panels and the connections between the top flanges of deck-bulb-tee girders, respectively.[36] The connection details are shown in figure 49.

These connection details consist of headed reinforcement or straight bars or hairpins protruding from the panels into the connection region. The connection region is filled with UHPC mixed on site. The experimental testing of these connections under repeated loading (up to 5 million cycles) has shown the excellent performance and water tightness of the details. These connection details are already implemented by the New York State DOT (NYSDOT) in a few bridges.

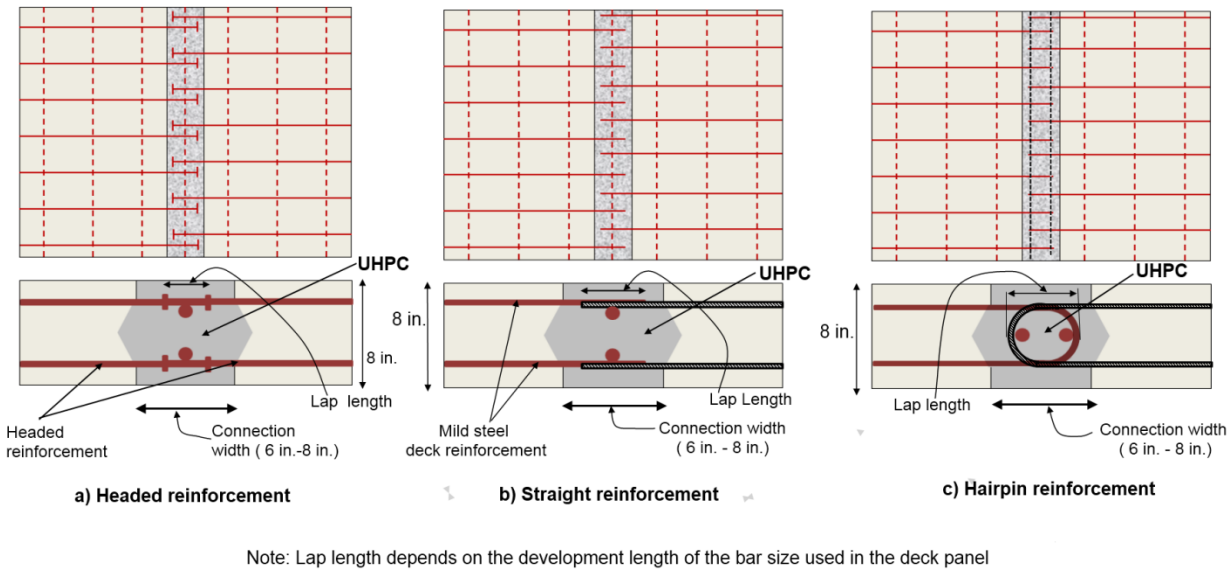

Figure 49. Diagrams. Panel-to-panel connection details used for HPC deck panels by NYSDOT with field-cast UHPC.[36]

In today's practice of using precast deck panels, the connection regions are typically filled with conventional grouts and utilize mechanical connectors (such as couplers) and confinement using steel tubes or hoops to develop the reinforcement in the connection regions. The details of such connections are presented below as connections 3, 4, and 5.

These details were developed primarily for conventional cementitious grouts and HPC precast deck panels. Some of these connection details may be relatively difficult to construct and, therefore, they may not be cost-effective. However, by taking advantage of the excellent bond properties of UHPC (as it is used in the connections instead of grout), these connection details can be modified appropriately to find a use in bridges using UHPC waffle deck panels.

Connection 3

Connection 3, recommended for panel-to-panel connections herein, was developed as part of NCHRP Project 10-71 to develop design and construction specifications for durable CIP-reinforced concrete connections for precast deck systems.[46] The typical details of the connection, which consist of a grouted shear key interlaced with lapped U-bar reinforcement along the length of the panels, are shown in figure 50.

Experimental studies completed on this connection indicated that the proposed longitudinal joint had sufficient strength, fatigue characteristics, and crack control for the maximum service loads determined. Although NSC was used in the connection, the use of UHPC is suggested here. Because of the use of U-shaped bars and UHPC, the length of the connection can be reduced appropriately to a value comparable to connection 1.

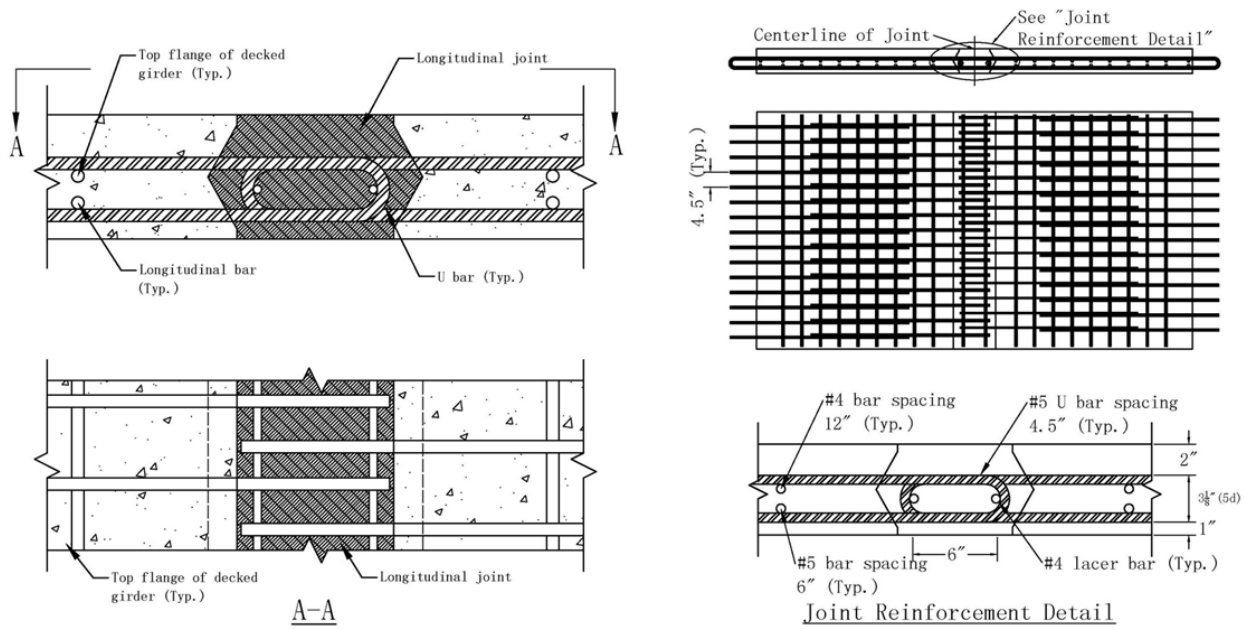

Figure 50. Diagrams. NCHRP 10-71 longitudinal panel-to-panel connection.[46]

A similar connection was developed for the second Strategic Highway Research Program (SHRP 2) Project R04, which aimed to develop standards and codes for accelerated bridge construction by constructing a demonstration bridge. A UHPC transverse deck joint over a pier was the primary focus of a laboratory experiment conducted at ISU due to its location in the tension zone resulting from negative moments. This connection was then employed in a demonstration bridge in Pottawattamie County, Iowa (see figure 51).

Figure 51. Photo. US Highway 6 demonstration bridge in Pottawattamie County, Iowa.[47]

The configuration of the connection with respect to other bridge elements and the connection detail are shown in figure 52 and figure 53.

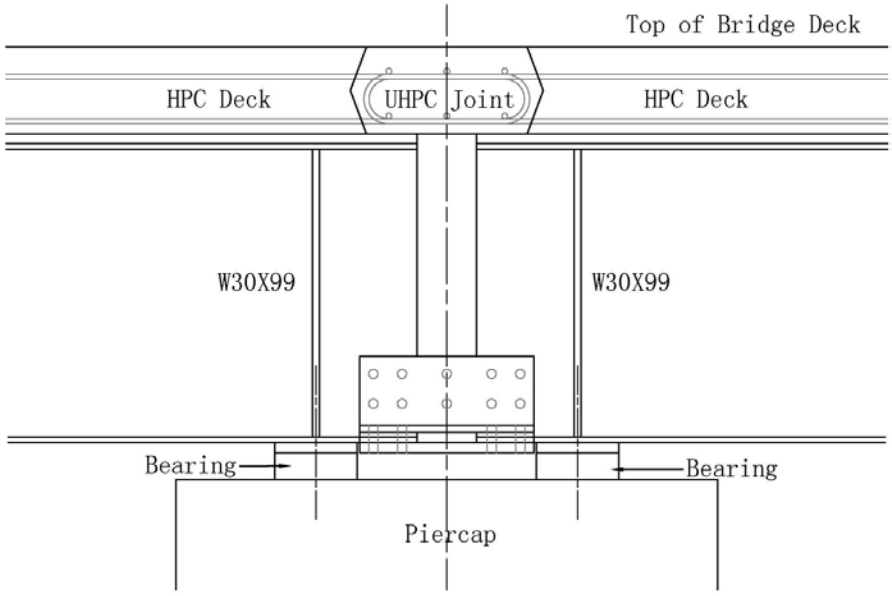

Figure 52. Diagram. Global connection configuration.[47]

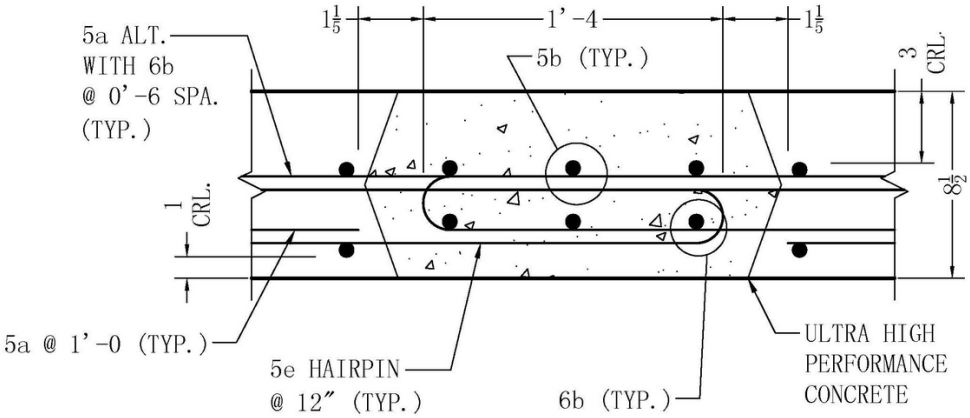

Figure 53. Diagram. SHRP 2 transverse connection detail.[47]

Testing this connection revealed that the interface between the UHPC joint fill and HPC deck panels experienced debonding and significant opening under service level negative moments, raising concerns over the durability of the connection. However, similar design details have been used successfully at transverse connections in single-span bridges. A post-tensioned retrofit over a short distance was developed and implemented successfully with adequate prestressing force to eliminate opening at the interface from negative moment experienced over the bridge piers.[47] Instead of the joint, if the waffle panel is positioned with the center of the panel over the piers, the inherent tensile resistance of the panel may be taken advantage of in ensuring adequate performance of this connection without any prestressing.

Recommendations

- If this detail is desired to be used in areas of high negative moment over interior supports of multiple-span bridges, further investigation regarding its applicability in any tension zone should be carried out. One such option would be to use prestressing, and the other is to move the connection away from the top of the pier.
- In typical transverse connection details, the width of the void at the top of the panel can be limited to ~8_{db}, or 6 inches for #6 bars. This would reduce the separation of the panels to 9 inches at mid-depth.
- The U-bar reinforcement may be replaced with conventional, straight reinforcement due to superior bond strength between UHPC and steel reinforcement and the corresponding reduction in development length.
- If U-bar reinforcement is used in conjunction with UHPC, the length of connection may be reduced appropriately, provided it does not compromise the workability of the connection in the field.

FHWA published *Connection Details for Prefabricated Bridge Elements and Systems* to promote the advantages of using prefabricated elements and systems in bridges.[48] The document represents the state of the practice with respect to accelerated bridge construction and focuses on presenting quality details for use by bridge engineers in the structure-type study phase of a design project. The remaining details in this section are selected details obtained from this document.

Connection 4

The connection 4 detail is a grouted shear key typical of a transverse joint between adjacent full-depth deck panels from the Iowa DOT. This connection, shown in figure 54, has been classified as Level 2, meaning it had been used on only one project but was found to be practical to build and had performed adequately.[48]

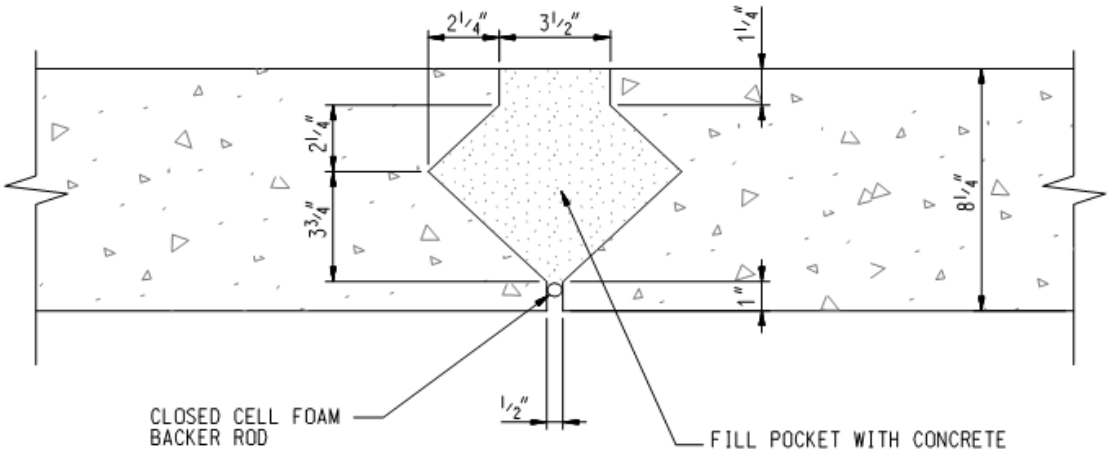

Figure 54. Diagram. Grouted shear key panel-to-panel detail.[48]

Similar details have been used typically with longitudinal post-tensioning applied across the joint to ensure that the joint remains in compression under the negative live load moment. Although some States have used details without post-tensioning, there have been reports of concerns specific to leakage.[48]

The connection shown in figure 55 is another transverse shear key joint, but includes the post-tensioning details, as illustrated, which were proposed by the NYSDOT.

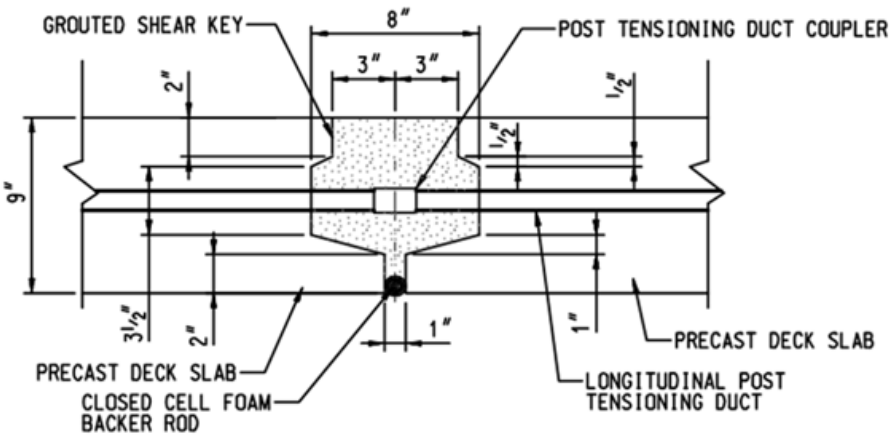

Figure 55. Diagram. Post-tensioned grouted shear key panel-to-panel transverse joint detail.[48]

This connection is classified as a Level 1 detail—one that has been used on multiple projects and has become standard practice for at least one owner/agency.[48] A suggested alternative would be to fill the pocket with UHPC to improve durability of the connection. With this detail, the connection can provide dependable negative moment resistance.

Recommendations

- Numerous shear key geometries have been used successfully in practice. It may be desirable to simplify the shear key geometry from that shown in figures 54 and 55 to reduce fabrication difficulty (see detail in figure 56). This decision should be made on an individual project basis after consideration of the appropriate factors.
- Post-tensioning is often costly and time-consuming and necessitates the contracting of specialized labor, complicating the construction process undesirably. Thus, alternative details based on combining UHPC and mild steel reinforcement should be evaluated prior to selecting such a detail. However, if post-tensioning is deemed necessary, it has been shown to provide excellent crack control and water tightness in panel-to-panel connections, reducing many durability concerns. If post-tensioning is used, a minimum prestress level of 250 psi should be maintained across the joint after losses.[49]

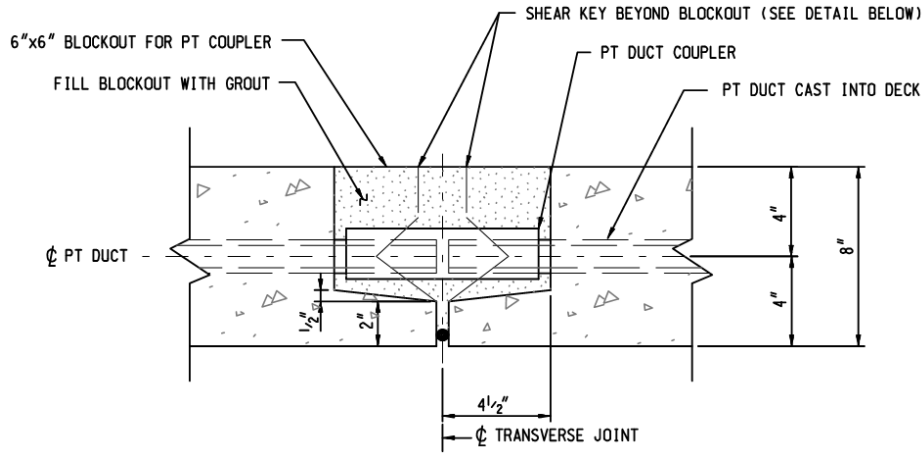

Figure 56. Diagram. Post-tensioned transverse joint connection with simplified pocket geometry.[48]

Connection 5

In the connection 5 detail, on one side of the panel, #6 reinforcement is embedded 6 inches into a galvanized, bulged hollow structural section (HSS 4 in. x 12 in. x 3/8 in.). On the other side of the panel, the reinforcement extends 7 1/2 inches beyond the panel. A 1-inch-diameter plastic pipe is attached to the top surface of the HSS tube and is used to fill the tube with grout after installation. The HSS tube has an oversized hole (1.75 inches in diameter) on the free side of the panel to help in installing adjacent panels.

The HSS panels are installed such that the first panel is laid with the HSS exposed and ready to receive the protruding reinforcement from the adjacent panel. After the adjacent panel is laid, the HSS is filled with grout to complete the connection between panel elements. Note that installation of this connection requires tilting of the panels to avoid interference with shear connectors attached to the superstructure. An individual panel and the connection interface between adjacent panels are shown in figure 57 and figure 58.

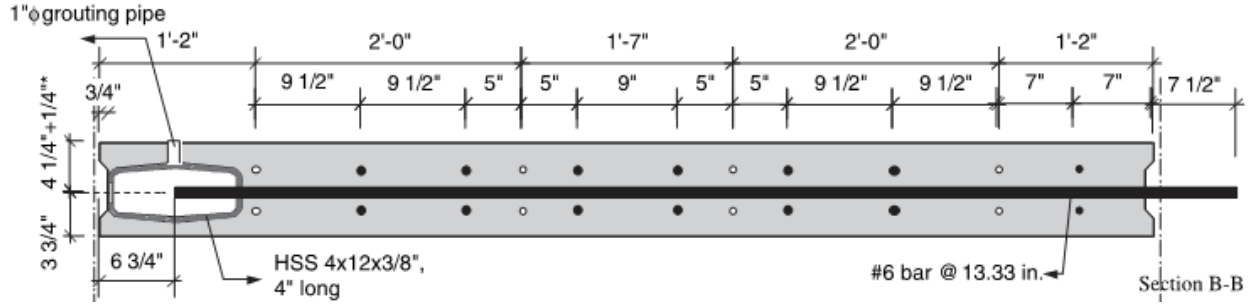

Figure 57. Diagram. NCHRP 584 panel for system CD-1A.[50]

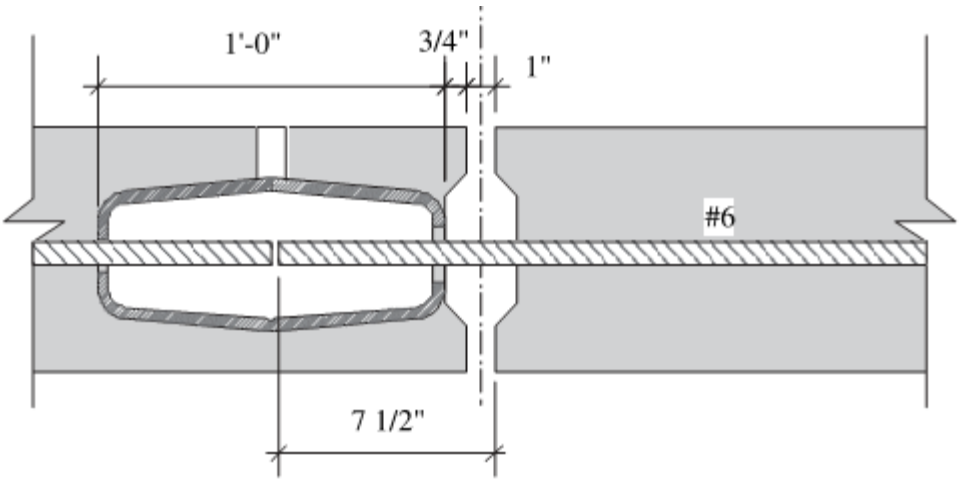

Figure 58. Diagram. NCHRP panel-to-panel connection interface.[50]

Use of HSS tubes in the panel was motivated by a tube's ability to confine the grout used conventionally in similar details. Confinement allows a bar to develop its yield strength in a shorter distance than when unconfined. Tests showed that conventional grout was able to fully develop the yield strength of #6 bars in these details. Thus, in light of UHPC's enhanced bond characteristics, bar development should not be a concern in the detail presented.

This connection is described in NCHRP Report 584, *Full-Depth Precast Concrete Bridge Deck Panel Systems*, which documents a research project motivated by the potential to develop a totally prefabricated bridge construction system.[50] One of the project objectives was to develop connection details for new deck panel systems. The requirements were that the details satisfy the following conditions: high durability, quick construction time, good ride quality, and high structural performance. The research produced two panel-to-panel connection details, one of which is the one presented here as connection 5. (The research also developed one panel-to-girder connection detail each for concrete and steel girder bridges, and these details are presented in the next section of this chapter.)

Although these details were not designed explicitly for use with UHPC, they can be expected to perform as well or better when UHPC is used. Thus, they are presented here as viable options in precast deck construction. For reference, the deck panels for which this connection was developed are 8 ft long and cover the entire width of a 44-ft bridge; the panels have an 8-inch structural depth with an additional 1/4-inch sacrificial layer at the top that allows for texturing of the top surface of the slab (for rideability treatment). These panels are reinforced longitudinally with #6 bars at 13.3-inch spacing.

Recommendations

- Connection 5 would not be suitable for typical waffle deck construction because the specified size of the HSS tubes is larger than typical rib widths in waffle deck panels. However, connection 4 is presented as an option for connecting internal waffle panels to overhang sections that may be solid panels. In this case, the HSS tube would be embedded into a solid overhang panel and would receive reinforcement extending from the adjacent waffle panel. The HSS tube embedment can be achieved with short shear studs anchored into surrounding UHPC in the overhang panel, requiring no reinforcement extending from this panel.
- In addition to filling the tubes with UHPC, the void between panels should be filled to provide protection against corrosion of reinforcement crossing the joint interface.

PANEL-TO-GIRDER CONNECTION DETAILS

Connections 6a and 6b

Connections 6a and 6b were designed for the ISU test mentioned previously. In this study, two deck panels spanned the width of the bridge and were supported by five prestressed concrete girders. The two deck panels met at the center girder, requiring a longitudinal panel-to-panel-to-girder connection. This connection can be established using dowel bars extending from the panels and shear hooks protruding from the girder, which are tied together with additional reinforcement placed longitudinally (along the girder length). The void between the panels is subsequently filled with UHPC. This connection detail is shown in figure 59. (Note that the shear hooks protruding from the girder are not shown, for clarity.)

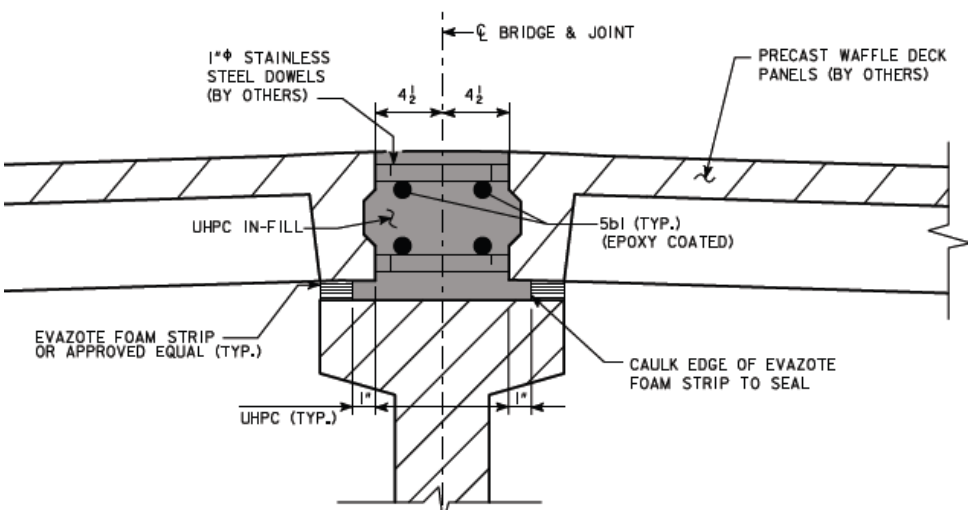

Figure 59. Diagram. Longitudinal connection tested for waffle deck at ISU.[40]

The deck panels are also supported between the edges by prestressed concrete girders. To provide a connection between the panel and girder, shear pockets are provided at intervals along the deck panel and clusters of horizontal shear connectors are left protruding from the supporting

girder at these locations. In this connection, shown in figure 60, shear hooks extending from the girder are embedded into UHPC that is poured to fill the shear pocket. (Additional information about shear pockets and horizontal shear connections is included in chapter 4.)

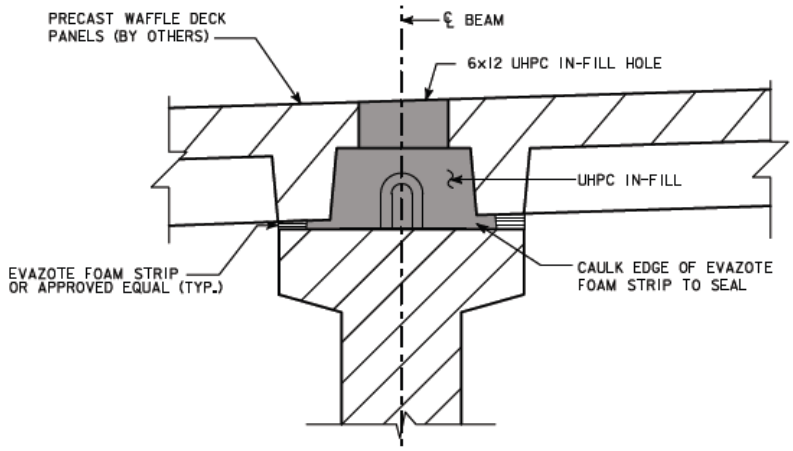

Figure 60. Diagram. A shear pocket connection tested at ISU.[40]

These two connections were designed expressly for use with UHPC fill in the connections and were shown to exhibit excellent performance.

Connection 7

The FHWA developed a novel composite connection detail for joining precast concrete bridge decks to supporting superstructure elements.[51] The effort was focused on creating a simple detail with little to no interference or field fit-up issues, increased long-term durability performance, and reduced aesthetic and rideability concerns. The FHWA designed this connection to engage the sustained tensile capacity of the field-cast UHPC.

The connection at the supporting girder resembles that of traditional CIP deck construction, where the headed studs/reinforcing steel protrude from the girder into the haunch continuously along the member. One difference, however, is that the extension of the height of the connectors is reduced to avoid interference with the precast deck. A continuous channel/void is cast into the underside of the deck panel. The bottom mat of transverse reinforcement crosses this void. This void under the precast deck eliminates the need for full-depth shear pockets; thus, clustering of connectors can be avoided, and the shear connectors can be placed continuously along the girder.

After the precast components are assembled into position, the haunch is formed and UHPC is cast into the void to fill the haunch connection completely. Vent holes can be provided in the deck panels to ensure the UHPC fills the void completely. The research concluded that the connection developed is capable of meeting the requirements associated with horizontal shear connections and ensuring composite behavior, and that it surpassed the performance displayed by a companion conventional test specimen. Figures 61 and 62 show, conceptually, the FHWA-developed connection detail for steel girder and concrete girder superstructures, respectively.

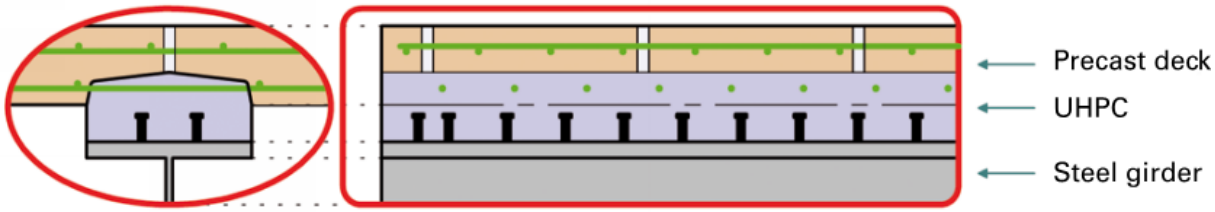

Figure 61. Diagram. FHWA panel-to-steel girder connection detail.[51]

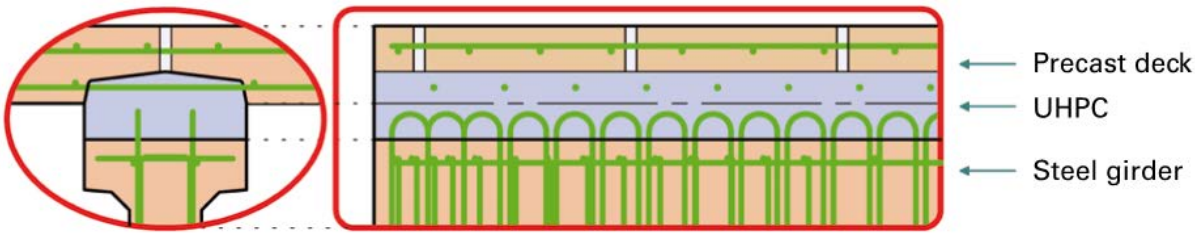

Figure 62. Diagram. FHWA panel-to-concrete girder.[51]

- Roughening the interfaces and surfaces between the precast components enhances the interface resistance to horizontal shear stresses.
- The detail presented above is only conceptual and has not been deployed in actual bridge construction projects. Thus, relevant dimensions, bar sizes, etc. must be determined and evaluated before the connection can be specified confidently in practice.

Connections 8a and 8b

As mentioned in the last section, two panel-to-girder connections (one each for steel- and concrete-girder bridges) were developed as part of the NCHRP 584 research.[50] The first connection detail, shown in figure 63, includes headed shear studs welded to the top flange of supporting steel girders at prescribed intervals, with 1 1/4-inch-diameter studs placed in clusters of eight and spaced at 48 inches.

Partial-depth shear pockets are fabricated in the deck panels at locations corresponding to the locations of stud clusters along the girder, which are recommended to be filled subsequently with in situ UHPC (via a grouting pipe extending through to the top surface of the deck) to complete the connection. These pockets were designed with either an HSS tube or three #6 closed ties to provide confinement and increase the compressive strength of the grout used; because of its superior compressive strength, this may not be necessary when UHPC fill is used.

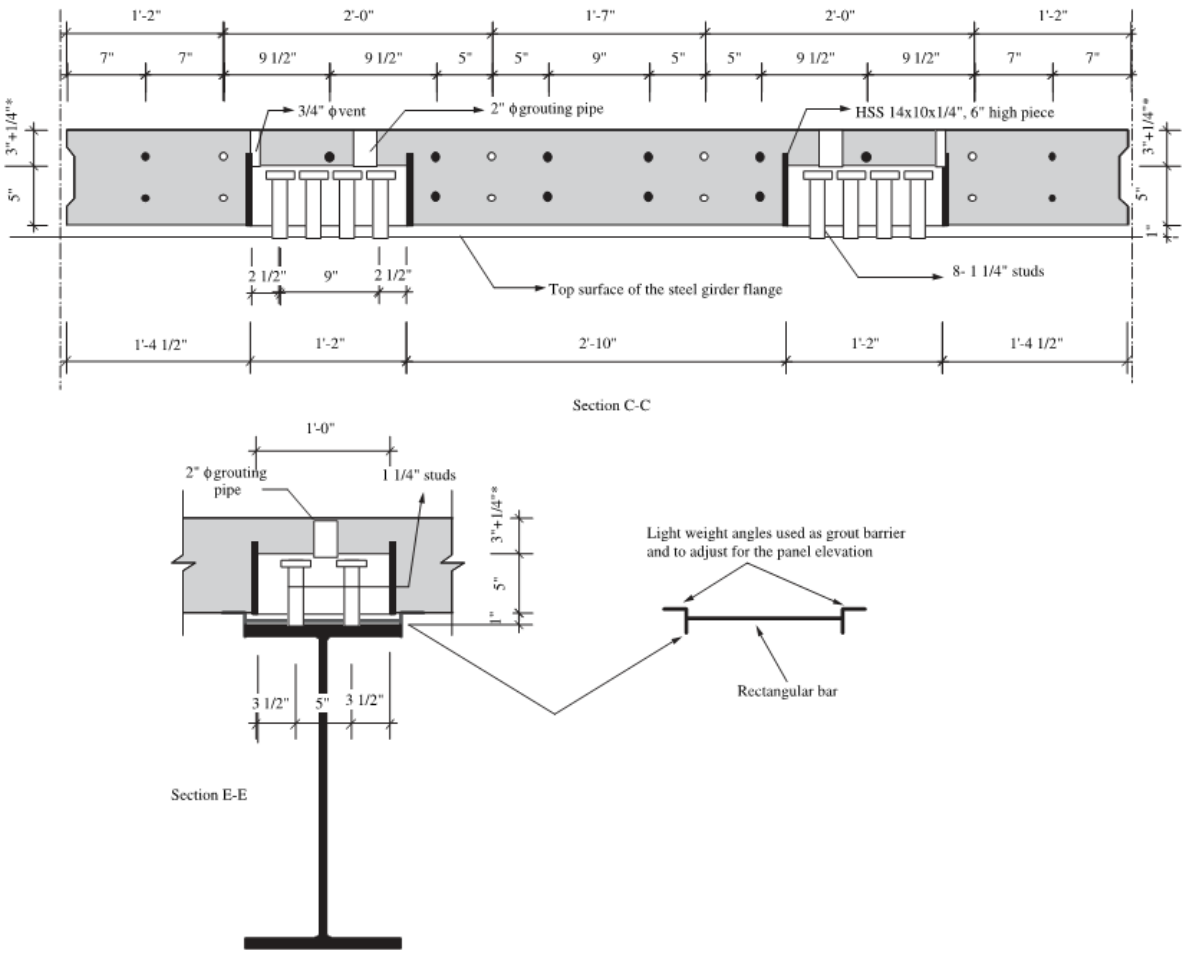

Figure 63. Diagram. Panel-to-steel girder connection.[50]

The 1 1/4-inch studs are used in favor of 7/8-inch-diameter studs to decrease the number of studs per pocket, thus decreasing pocket dimensions. The 48-inch spacing dimension violates the AASHTO LRFD Bridge Design Specifications for stud spacing. However, as part of the research, NCHRP conducted tests that concluded that the maximum spacing of clusters of studs can be extended to 48 inches for 7/8-inch and 1 1/4-inch stud diameters when confinement of the grout surrounding the stud clusters is provided.

This design has been implemented successfully in practice by the Wisconsin DOT during a deck replacement procedure of the Interstate 90 Door Creek Bridge in Madison.[52,53] The connection is shown utilizing partial-depth shear pockets; consequently, additional considerations arise that must be accounted for when evaluating the suitability of this type of shear pocket.

Recommendations

- Confinement of the shear pockets via closed tie reinforcement or an HSS tube can be eliminated when UHPC is used as the fill material due to its increased compressive strength.
- The size and number of horizontal shear studs and their spacing need not be as described above. Individual project requirements dictate the size, number, and spacing needed.

The second detail developed in the NCHRP 584 report calls for clusters of three 1 1/4-inch-diameter double-headed studs spaced at 48 inches, as shown in figure 64. These studs are embedded into the top flange of the concrete girder. The reason cited for using three double-headed studs rather than extending the vertical web shear reinforcement of the girder is to minimize the dimensions of the shear pocket. Similar to the connection to the steel girder, the partial-depth shear pockets are provided in the panel at locations corresponding to the shear studs, and the shear pockets can be filled with UHPC to finalize the connection.

Recommendations

- Confinement of the shear pockets via closed-tie reinforcement or an HSS tube can be eliminated when UHPC is used as the fill material, due to its increased compressive strength.
- Again, the size, number, and spacing of the shear connectors can be modified from those presented, to meet specific project demands.

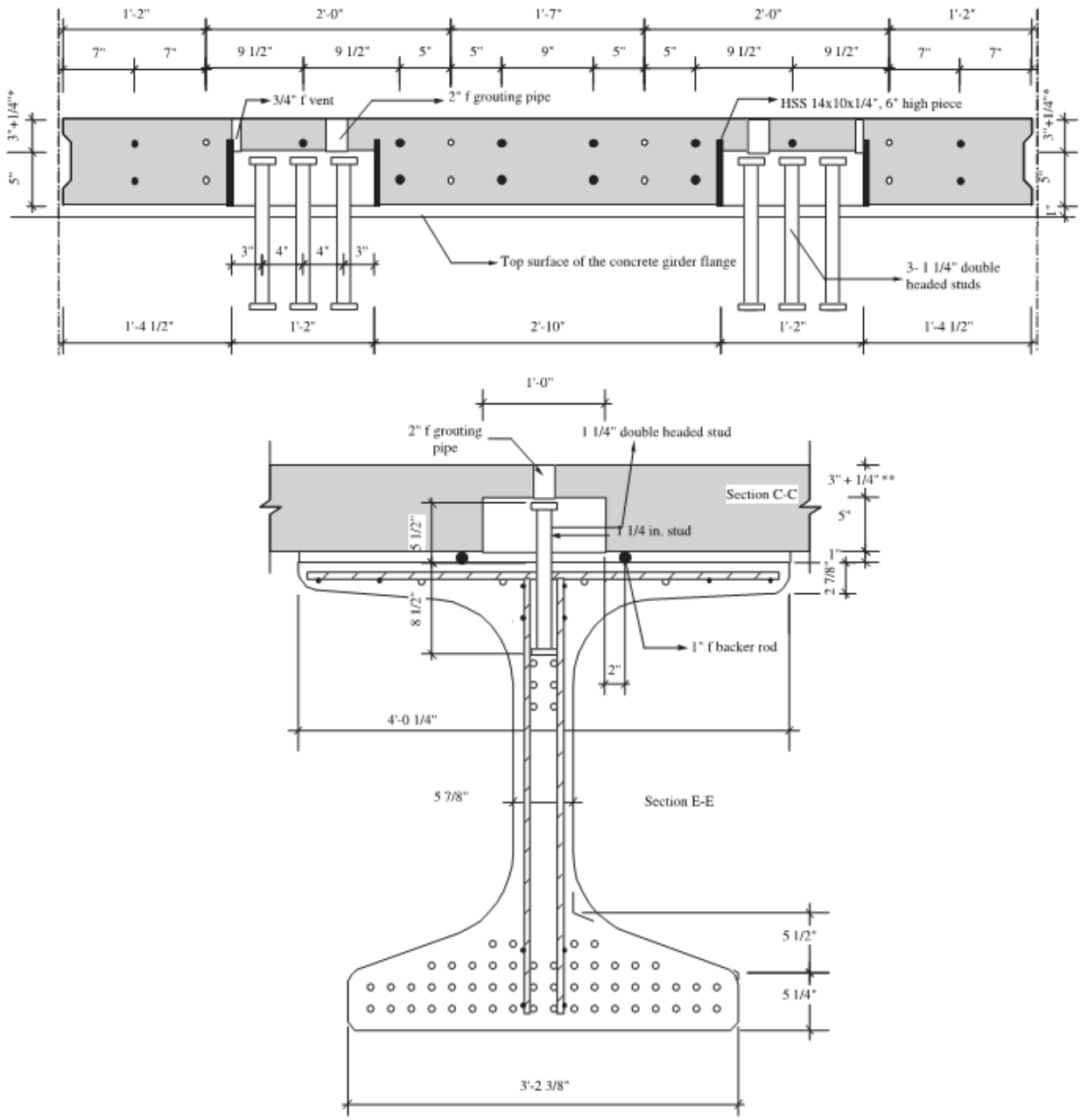

Figure 64. Diagram. Panel-to-concrete girder connection.[50]

Connection 9

Figure 65 shows a typical panel-to-girder connection that facilitates horizontal shear transfer and the development of composite action of the deck/girder system. The deck panel is fabricated with tapered shear pockets, or blockouts, at prescribed intervals along the length of the beam. At locations corresponding to the blockouts, headed shear studs are welded to the top flange of the steel beam. After the deck panel is transported to the site and properly set into place and any

required post-tensioning procedures have been performed, the blockout is then filled to complete the connection.

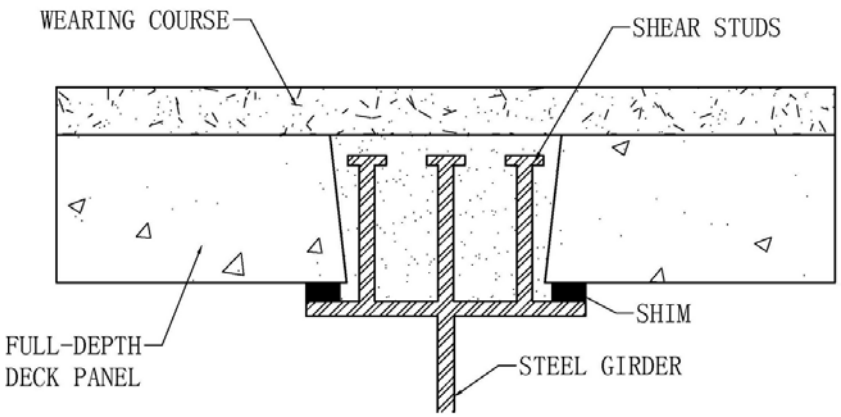

Figure 65. Diagram. Panel-to-girder (steel) shear stud connection.[54]

Due to its superior characteristics compared to typical grout used to fill the shear pockets, UHPC could presumably result in smaller pocket sizes and/or smaller shear connectors provided per pocket. Additional information on horizontal shear connections between steel girders and precast concrete deck panels is included in chapter 4.

Recommendations

- The wearing course shown in the detail is optional. It may be eliminated based on individual project requirements, as UHPC exhibits unique durability characteristics, including excellent abrasion resistance.
- It may be desirable to provide a tapered blockout as shown to obtain a mechanical bond between UHPC and deck panels in addition to the interface friction between the two separately cast materials.
- In addition, oval-shaped blockouts (in plan) may minimize cracking and could therefore be preferred over typical rectangular blockouts, provided the cost difference is justified. (The additional cost of oval blockouts is usually insignificant.)

Connection 10

Another form of horizontal shear connectors that can be provided in concrete girders, protruding into the precast deck panel to ensure composite behavior, is hooked reinforcement. This reinforcement is usually provided by extending the shear stirrups in the girder out of the top flange, as shown at the top of figure 66. This protruding hooked reinforcement is provided at regular intervals, rather than continuously, at locations corresponding to shear pockets fabricated in the deck panel, similar to the procedure mentioned for the previous two connections.

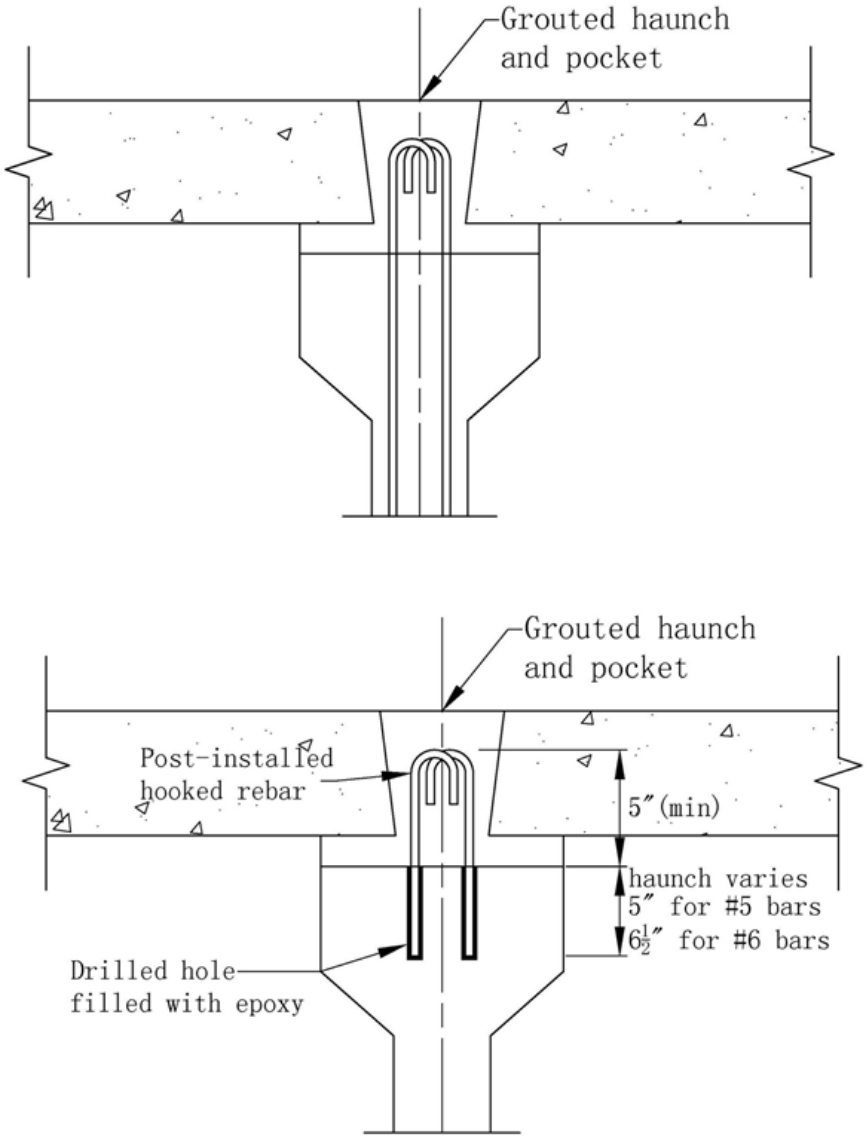

Figure 66. Diagrams. Extended stirrups and field-installed reinforcement as horizontal shear connectors.[49]

However, another option is to provide field-installed hooked reinforcing bars in holes drilled into the top flange of the concrete girder and filled with epoxy. This is particularly applicable during deck replacement projects, when an existing CIP concrete deck is removed. When a CIP deck is to be replaced with precast deck panels, it is required to remove all existing horizontal shear reinforcement from the girders (to avoid interference of existing reinforcement with placing the precast deck) and replace it with new shear connectors at the prescribed shear pocket locations during the deck replacement operation. Figure 66 illustrates both of these concepts. The top schematic shows extended shear stirrups, and the bottom one shows field-installed reinforcement.

CHAPTER 4. DECK REPLACEMENT

INTRODUCTION

Over the life span of a bridge, it becomes necessary to replace or otherwise modify the existing/original deck. Possible reasons for replacing an existing bridge deck include structural deficiency due to normal wear and tear, concrete deterioration due to freeze-thaw cycles, and damage resulting from penetration of de-icing chemicals (particularly in the midwest and northern States that experience seasonal freezing), as well as other environmental factors or other functional considerations such as bridge widening to accommodate increasing traffic demands.

Although the bridge deck may be in need of rehabilitation/replacement, often other elements of the existing superstructure remain robust and capable of performing adequately for the remaining service life of the bridge. Therefore, an interesting challenge is presented in which the bridge deck needs to be removed and replaced while the supporting girders and piers receive little to no modification or enhancement. This procedure is known as deck replacement, or redecking.

This chapter addresses deck replacement procedures when UHCP waffle deck panels are to be used to replace existing CIP concrete bridge decks.

BENEFITS OF PRECAST SYSTEM

Traditionally, US highway agencies have used CIP concrete to build new bridge decks or replace deteriorating decks. However, there are drawbacks with CIP construction associated with construction time, including the time needed to cure the concrete, costs resulting from false work requirements, traffic disruption, worker safety, and so forth. Full-depth, precast concrete bridge deck panels provide an efficient alternative to CIP deck replacement and offer some desirable characteristics to help alleviate the drawbacks associated with CIP construction.

For example, traffic disruption can be reduced because precast components make it possible to perform repair/replacement work only at night or on weekends, leaving the bridge in full service during peak traffic hours. This ability may also help improve work zone safety by reducing the number of construction personnel exposed to moving traffic and the amount of time that they are exposed to it.

In addition, when full lanes of traffic need to be closed for work, staged construction can be utilized, leaving the remaining lanes open. Furthermore, construction time and costs are decreased due to reduced formwork requirements and concrete setting time, and higher quality can be achieved due to panels being cast in controlled environments.

Because of these benefits, interest in full-depth, precast bridge deck panels has been increasing steadily in the past few decades. In fact, more than 15 States have successfully used full-depth

precast bridge deck panels in deck replacement projects and new construction on both concrete- and steel-girder bridges.[55]

That notwithstanding, the use of precast deck panels does not come without its limitations. Unlike CIP construction, precast construction may introduce fabrication and transportation challenges. These challenges include not only cost, but also many logistical considerations. In addition, due to the modular nature of precast construction, many connections and joints are obviously present in the bridge-deck panel system. These connections present increased opportunity for leakage and water, salt, and chloride ingress into the deck panels, creating significant potential for corrosion and degradation of the bridge deck. The concrete deck panels can also crack under service loading, presenting even more durability concerns.

Due to its durability properties, the use of UHPC as a primary material in precast bridge deck panels eliminates several of the concerns associated with conventional precast concrete deck panel construction. The use of UHPC panels realizes all of the advantages associated with precast construction, in addition to a few others.

The superior structural characteristics of UHPC compared to those of normal concrete or HPC present an opportunity to decrease panel sizes considerably. This, along with the possibility of using a waffle configuration, results in lighter panels, which are handled more easily by construction equipment while decreasing the dead load on the structure, improving overall structural efficiency.

The higher strength panels may also undergo less cracking than conventional concrete panels, increasing durability performance. As mentioned in chapter 3, the use of UHPC as a fill in the joints can result in simplified, constructible connections with exceptional long-term durability.

CURRENT PRACTICE

Several procedures are typical for most bridge redecking operations. These common procedures follow and assume a CIP existing deck removal replaced with precast deck panels:

1. Removal and disposal/transportation of existing CIP deck.
2. Removal of existing horizontal shear connections to beams/girders.
3. Preparation of existing girders for new horizontal shear connection details.
4. Design and fabrication of deck panels.
5. Transportation of deck panels to site.
6. Placement of deck panels onto existing bridge structure.
7. Grouting of transverse connections.
8. Placement of shear connectors in panel blockouts.
9. Longitudinal post-tensioning and, if required, transverse post-tensioning of deck panels.
10. Grouting of panel blockouts to engage horizontal shear connectors.
11. Closure and expansion joint pours.
12. Barrier and overlay pours if needed.

Most precast panels used in deck replacement scenarios are also prestressed panels. Often, the panels are pre-tensioned transversely during the precast fabrication process, transported to the site, and post-tensioned longitudinally once they are placed on girders.

The advantages of prestressing are well known and include increased member flexural and shear strength, as well as the potential to eliminate/reduce cracking and enhance durability performance. The post-tensioning procedure, in particular, creates continuity between adjacent deck panels along their transverse joint interfaces, enabling transfer of moments across the connections. However, post-tensioning is costly and labor intensive and, as before, left out here in favor of more economical and construction-friendly connections.

Design and analysis of the deck panels, as well as the longitudinal and transverse joint connections between adjacent panels, is an obvious step prior to undertaking the deck replacement procedure and is presented in accompanying sections of this document (see chapters 2 and 3).

A critical aspect of the deck replacement procedure is providing horizontal shear connections between the existing superstructure and the new prefabricated deck panels capable of ensuring composite behavior usually assumed in design. The remainder of this section discusses some of the standard procedures outlined above and how they can be used in installing prefabricated UHPC waffle deck panels. It also provides details and recommendations for ensuring composite behavior between girders and waffle deck panels through horizontal shear connections.

Existing Deck and Shear Connection Removal

Prior to placement of the new precast deck panels, the existing CIP concrete deck must be separated from the existing structure and removed. If the existing deck was made to be composite with the superstructure via shear connectors, these connectors must be located and the concrete around them removed. Due to the nature of CIP construction, the existing deck must be cut/sawn into sections of limited size to facilitate removal. This should be done with equipment capable of removing the existing deck without damaging the superstructure.

Sawing/cutting is recommended over jackhammering because of previous cases in which the top flanges of prestressed girders have been damaged during the deck removal process.[56] In addition, the saw-cutting procedure should be monitored closely to avoid cutting through steel girder flanges by using improper blade depths.

Next, the existing shear connectors must be removed, as necessary, to avoid interference with the new precast deck panels. In many cases, complete removal of all existing shear connectors is warranted. For steel-girder construction, horizontal shear connectors are present in the form of headed shear studs. These studs should be removed by torch cutting them close to the base along with subsequent grinding of any remaining connector material. In concrete-girder construction, typical horizontal shear connection is in the form of conventional reinforcement left projecting

from the top of the girder and then cast into the CIP deck. This reinforcement should be torch cut as close as possible to the top of the girder.

Upon removal of existing shear connectors, the top of the girder should be cleaned thoroughly to remove any remains of the old deck, regardless of steel or concrete girders. Figures 67 and 68 show the removal of an existing CIP concrete deck. Figure 69 illustrates the substantial amount of reinforcement that must be removed in deck replacement operations.

Figure 67. Photo. Jackhammering deck sections prior to removal.

Figure 68. Photo. Sawn deck section being removed by crane.

Figure 69. Photo. Existing superstructure with remaining reinforcement after deck removal.

Horizontal Shear Connection Details

The horizontal shear strength at the interface between two interconnected elements is of primary importance to provide composite action. Between bridge decks and the supporting structure, horizontal shear connectors are provided, enabling composite behavior between the girder and deck slab system and preventing the separation of the girder and the slab.

Typically in CIP concrete construction, the shear connectors are distributed more or less uniformly over the length of the girders and the concrete is then cast over top. However, due to the nature of precast bridge deck panel construction and installation, this procedure is not practical. Instead, in precast construction, the deck panels are fabricated with blockouts, or pockets, at prescribed intervals and clusters of shear reinforcement are provided within these pockets, which are subsequently grouted to provide connections between the panels and girder. These pockets are illustrated in figure 70, which shows a deck panel placed on steel girders and resembles the operation adopted for installing the UHPC waffle deck in the field (see figure 5).

Composite action is created after the grout in the pocket gains adequate strength. A few options are available for providing horizontal shear connectors in girder bridges and are determined mostly by whether steel or concrete superstructure girders are present. Some recommendations and discussion of each follows.

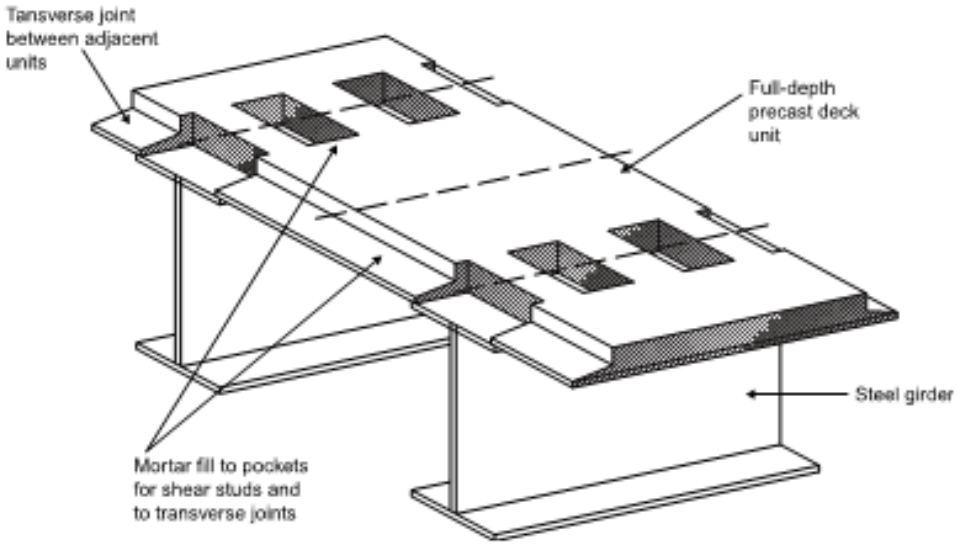

Figure 70. Diagram. Shear pockets used for installing precast deck panels.[57]

Steel-Girder Bridges

In steel-girder bridges, the most commonly used option is to provide connections between the girders and deck system using headed shear studs welded to the top flange of the girder. These studs are embedded in the deck slab for an adequate height to provide for full anchorage. The Utah DOT recommends using 3/4-inch-diameter studs, while a diameter of 7/8 inches is the largest common size that has been used in highway bridges for the past three decades.[58]

Utah DOT recommends that the length of the stud be determined by the following criteria: the bottom of the head of the connector is at or above the mid-height of the panel while maintaining 3 inches of clear cover or at least four times the diameter. Another study suggests that the studs should be developed at least 5 inches into the slab to prevent pry-out failures.[59]

Given the shear connectors provided for precast decks systems must be located in discrete locations that coincide with the shear pocket blockouts fabricated into the panels, their spacing is considerably larger than in CIP systems, where they are distributed uniformly along the length of the girders. Therefore, to still provide adequate shear resistance at the interface between the deck and girders, the shear studs are clustered within the shear pockets, rather than provided individually. Figure 71 illustrates clustered headed shear stud arrangements in deck panel shear pockets.

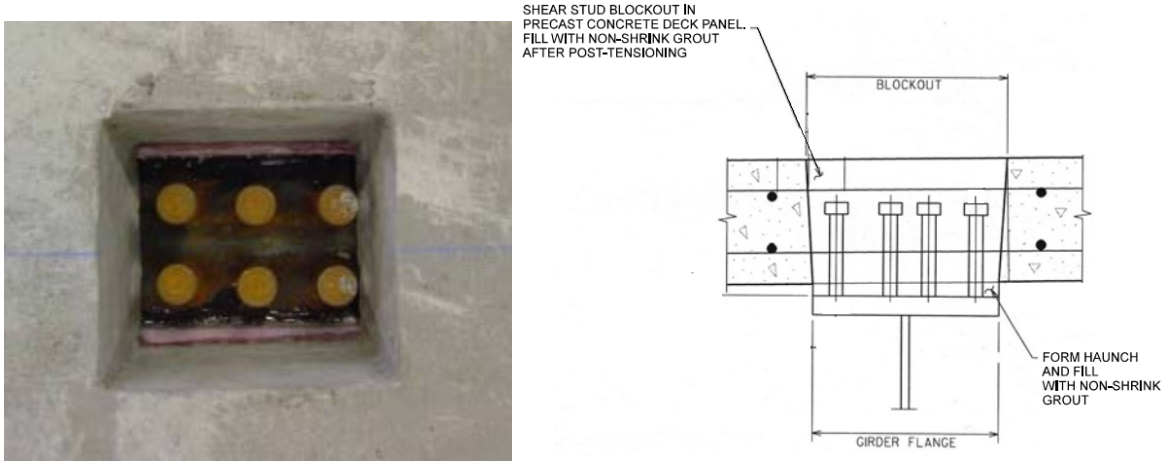

Figure 71. Photo and diagram. Clustered headed shear stud arrangement for deck panel shear pocket.[60]

The current AASHTO LRFD Bridge Design Specifications (Article 6.10.10.1.2) state that the spacing between shear connectors shall not exceed 24 inches.[27] The specifications do not distinguish between spacing requirements of individual studs and those of clusters of studs. Designers have interpreted this provision as applicable typically to both situations. However, this specification is based on research conducted more than 30 years ago and has been a point of contention recently.[58]

Under NCHRP Project 12-65, researchers conducted tests concluding that the maximum spacing of clusters of studs can be extended to 48 inches for stud diameters of 7/8 and 1 1/4 inches when confinement of the grout surrounding the stud clusters is provided. This spacing has also been implemented successfully in practice during a redecking procedure of the Interstate 90 Door Creek Bridge in Madison, Wisconsin.[53]

It is advantageous to be able to increase spacing of shear connector pockets for a number of reasons: simplify and speed up the panel fabrication process, reduce grout usage decreasing cost and construction time, reduce possibility of water leakage at deck/grout interface, and increase flexibility in layout of required transverse reinforcement. In addition, tests have shown that using 1 1/4-inch-diameter studs in favor of 7/8-inch-diameter studs can reduce the number of studs by about 50 percent and the shear pocket size by 40 percent, further increasing economy. This approach has been used successfully in Nebraska.[58]

Concrete-Girder Bridges

For concrete-girder bridges, horizontal shear connection is provided typically by conventional mild steel reinforcement that projects from the top of the girder and into the slab. However, similar to steel bridge shear connections, headed studs can be welded to a steel plate embedded into the concrete beam.

For deck replacement projects, Utah DOT suggests providing T-headed mild steel reinforcement placed in drilled and grouted holes.[61] The recommended bar size is a #6 or equivalent with a head size able to fully develop the bar. Embedment is recommended to be 6 5/8 inches to provide a minimum of 26.4 kip in tension, which is based on fully developing the yield strength of the bars in tension.

The shear connectors need to be embedded far enough into the drilled/grouted holes as well as the precast deck panel to develop the full tensile strength of the reinforcement based on the shear friction theory of horizontal load transfer. A Virginia Tech study found that single-leg, post-installed rebar was a very convenient type of connector when using epoxy to fill the drilled holes.[59] In this study, #5 bars were embedded 5 inches into the drilled/epoxied hole and 5.5 inches into a 5,000 psi precast concrete deck; #6 bars were embedded 6.5 inches into the drilled hole and 5.25 inches into the precast deck. Figure 72 shows a connection configuration that can be used when placing precast bridge deck panels on concrete-girder bridges.

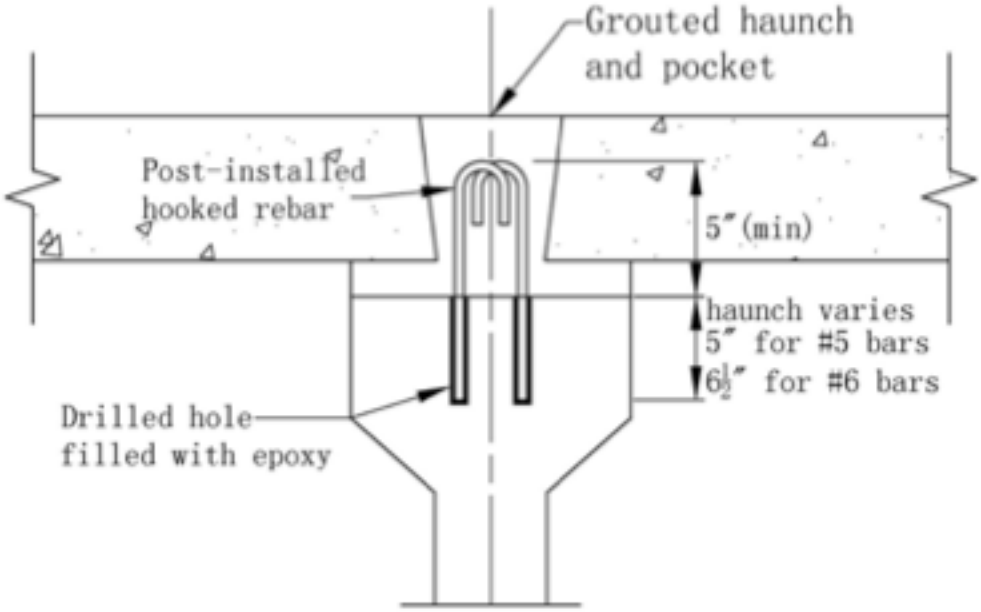

Figure 72. Diagram. Post-installed reinforcement as horizontal shear connector.

USE OF UHPC WAFFLE DECK

Following surface preparation and installation of connection elements such as shear studs or reinforcement to the existing girders, installation of UHPC waffle deck panels as part of the redecking process can proceed. The process will not be any different than what is recommended for new bridge construction (see chapters 2 and 3). The dimensions of the waffle deck panels and connections need to be designed adequately using the procedures recommended in the previous chapters. During this process, the recommended length for reinforcement and shear studs can be used rather than those recommended for typical full-depth precast concrete panels.

CHAPTER 5. FABRICATION/PRODUCTION, CONSTRUCTION, AND INSTALLATION

PREFABRICATION

All UHPC waffle panels should be prefabricated at a precast plant that has prior training in UHPC mixing and casting from the UHPC material provider. The panel fabrication involves several steps related to assembly of formwork to create the necessary void patterns or rib spacing, placement of transverse and longitudinal reinforcement, placement of dowel bars at the transverse and longitudinal joint locations, creating voids for shear pockets, batching and casting of UHPC, and steam curing of the final product. A panel fabrication process is shown in figure 73.

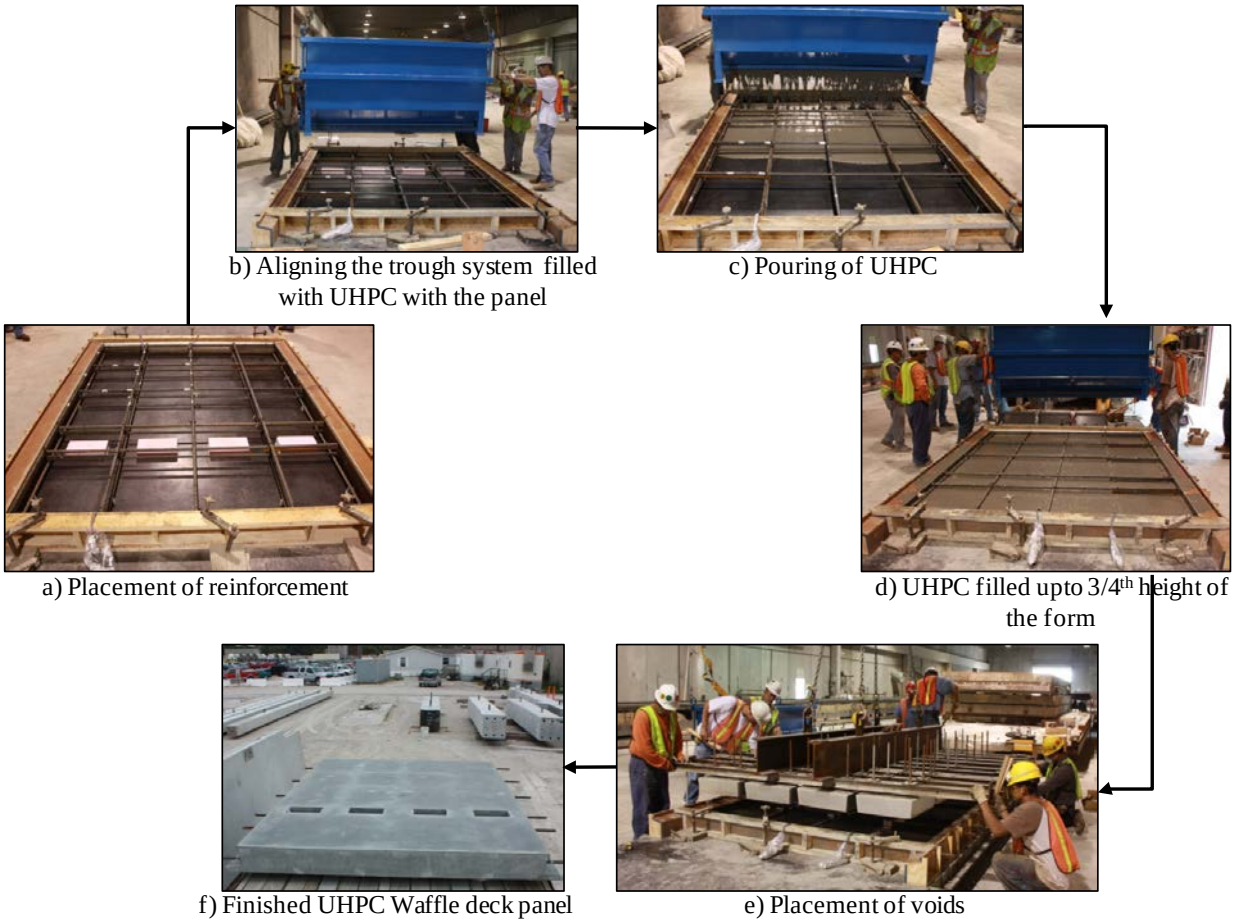

Figure 73. Photos. Construction of a UHPC panel.

Formwork

A specially designed, displacement-type formwork made of steel sections with adjustable rib spacing is recommended for the UHPC waffle deck panel fabrication, which is different from the formwork used typically for full-depth solid precast deck panels made of normal concrete.

The steel formwork is necessary to maintain the desired tight tolerances because of the thin UHPC sections in the waffle deck panels. In addition, the adjustable steel forms facilitate multiple waffle configurations, decreasing the production cost of the panels. It is suggested that panels be cast upside down using a formwork consisting of two parts, as shown in figure 74.

Figure 74. Photos. Formwork used for waffle deck panel construction.

The top formwork consists of blocks used to create the waffle voids, which can be adjusted to create the required rib spacing in both panel directions. The bottom formwork is a basic open-top design.

Reinforcement

The longitudinal and transverse reinforcement is placed in the bottom form, before it is filled with UHPC. The high bond strength and excellent durability properties of UHPC eliminate the need for using standard hooks and epoxy-coated special reinforcement.

While placing the transverse and longitudinal reinforcement, as well as dowel bars along the joint edges, tight tolerances should be exercised due to the cover requirements and the presence of thin rib sections in the waffle deck panel. The use of corrosion-resistant reinforcement may help in relaxing the tolerance limits for the longitudinal and transverse reinforcement without affecting the overall durability of the deck panel.

Batching UHPC

UHPC may be batched using a variety of different types of mixers. However, it is recommended to seek advice from the UHPC manufacturer regarding the energy demand on the mixer and any modifications required to mix large amounts of UHPC. Due to the properties of UHPC, it requires relatively high energy for mixing, thus subjecting the mixer to higher torque demands than normal. Precast producers must obtain training from the UHPC manufacturer prior to producing UHPC elements regarding batching of UHPC. The UHPC material batched according to the manufacturer specifications typically achieves a minimum dynamic flow of 8 to 9 inches (using the flow table described in ASTM C230).

Casting of the UHPC Panel

It is important to utilize the self-consolidating and self-leveling nature of UHPC. It can be placed with little to no vibration (depending on the flow), and the direction of casting/hopper configuration will dictate the fiber orientation. It is recommended to cast the waffle deck upside down (driving surface down) to facilitate a flat, uniform riding surface as well as allowing for the displacement casting of the waffle voids. Displacement casting of the voids is crucial to ensure a crack-free, durable waffle panel.

Using this casting technique, the bottom form is filled with UHPC to a depth of 4.5 inches (for an 8-inch-deep waffle panel), and the top formwork is then pushed into the UHPC, causing it to displace and form the ribs. The bottom formwork should be a basic open-top form and be fastened adequately to the casting bed, to prevent lifting of the bottom form due to pressure developed in the displacement process. The voids should be removed once the UHPC initial set is achieved (typically 12 to 14 hours after pouring). This will allow for the shrinkage to take place without any restraint, thereby preventing crack development in the deck panel.

In addition, the UHPC panels should be covered with plastic sheeting to prevent dehydration of the exposed surface. If the designer chooses to integrate a riding surface into the waffle deck panel instead of using an overlay wearing surface, adequate attention should be given to create the necessary riding surface using standard form liners or other suitable materials placed in the bottom form.

Curing of the Waffle Panel

Similar to conventional concrete, the strength gain of UHPC is influenced by the curing temperature. For handling the UHPC panels in the precast yard, a minimum compressive strength of 14,000 psi is typically recommended. To reduce the curing time needed to achieve this strength, the panels can be tented after casting and cured at 90 °F. On the Wapello County, Iowa, project, this additional step decreased the required curing time from 4 days to 2 days.

Once the UHPC reaches 14,000 psi, the panels should be moved to a curing area and subjected to a controlled steam cure at 195 °F with 95 percent relative humidity for 48 hours, as

recommended by the UHPC material manufacturer. This steam cure will enhance the UHPC to its ultimate strength and durability characteristics, surpassing a minimum design compressive strength of 24 ksi.

FABRICATION OF SHEAR POCKET

A few recommendations are presented for consideration when specifying the fabrication of shear pockets. As noted previously, either full- or partial-height shear pockets can be used, where partial-height pockets do not extend through the top surface of the precast deck. Examples of both partial- and full-height shear pockets are shown in figure 75.

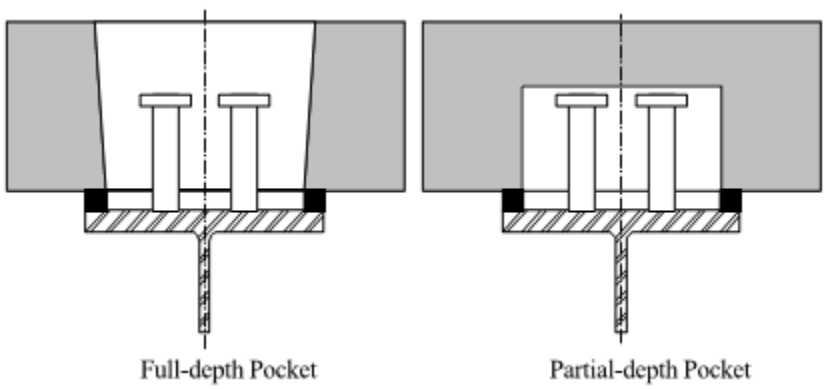

Figure 75. Diagrams. Full- and partial-depth shear pockets.

If no overlay is intended to be provided, partial-height shear pockets are recommended for protection from water leakage at the shear pocket/grout interface and for aesthetic reasons. When partial-depth pockets are used, the following criteria are recommended to be satisfied for precast decks: minimum 1/2-inch clearance between the highest point of the shear connector and the pocket and 2-inch minimum distance between the highest point of the shear connector and the top surface of the panel. In addition, injection ports and vents should be provided in partial-height pockets.[50] Furthermore, to avoid stress concentrations at the corners of the shear pockets, which could initiate cracking, the corners of the shear pockets can be rounded.[56]

Although identified previously as a preferred option, oval pockets often are more expensive to fabricate, but the additional cost is usually insignificant. When UHPC waffle deck panels are used in conjunction with in situ UHPC infill, it has been shown that rectangular pockets can be used reliably. Furthermore, both full- and partial-height shear pockets may be used.

If partial-height pockets are preferred, it must be ensured that there is sufficient dimension for the access hole to get UHPC in and fill the joint in a reasonable amount of time. In addition, the length of shear studs and extension of reinforcement into the pocket can be reduced due to the high compressive and bond strength of UHPC.

OVERLAY

Often, a thin epoxy polymer or modified concrete overlay is applied over precast deck panels after deck installation or replacement procedures have been completed. By providing an overlay, the panels, joints, and connections between precast elements are further protected from water and deicing chemicals, which, when used in harsh winter climates, can contribute to the deterioration of concrete and corrosion of reinforcing steel. UHPC shows promising durability characteristics suggesting that chemical corrosion may not be a major issue; however, specifying an overlay provides an additional measure of protection against potential durability issues.

In addition, due to the necessary transverse connections between deck panels, the riding surface on precast deck panel bridges may not meet specific requirements for rideability; an asphalt or concrete overlay can mitigate this issue and provide a smooth, comfortable riding surface for motorists.

Some of the suggested recommendations from the Utah DOT for the application of a thin polymer overlay on precast concrete deck panels can be utilized for UHPC waffle deck panels. These recommendations include selecting a minimum thickness of overlay of at least 1/2 inch, applying the overlay in at least two coats to obtain minimum thickness, and providing overlay joints that are not coincident with deck panel connections.[61]

With the UHPC panels, as observed in the Wapello County project, the overlay can be eliminated completely by grinding off any excess of the in situ UHPC poured in the joints to make a smooth transition between the panels and connections, thus providing an acceptable riding surface.

The suitability of different riding surfaces was investigated as part of this HfL project. The rideability and surface characterization of six different waffle deck surface finishes were investigated by measuring the skid resistance values (SRVs) and surface texture depth. Five of the textured surfaces were characterized using the standard sand patch test. The details of the textures investigated are presented in table 22 along with average values of measured sand patch diameter and texture classification.

Table 22. Details of the textures and average sand patch diameters.

Sample No.	Texture / (Brand)	Sand patch diameter (in.)	Average sand patch diameter (in.) (d)	Texture depth (in.)* $= \frac{4V}{\pi d^2} x 10^3$
1	2/61 Thames / (Rekli)	9.44, 8.66, 8.46, 8.86	8.86	0.0496
2	Broom finish / (Architectural Polymers)	10.03, 9.25, 9.64, 9.05	9.50	0.0429
3	2/102 Parana / (Rekli)	7.87, 7.68, 7.87, 8.07	7.87	0.0626
4	Heavy Broom finish / (Architectural Polymers)	6.3, 6.3, 6.1, 5.91	6.15	0.1027
5	Anti Skid / (Fitzgerald Form liners)	8.66, 8.86, 9.05, 9.05	8.91	0.0488

* V = volume of the sand used (= 3.05 in^3)

SRVs for different surface finishes were measured with the British pendulum tester using the ASTM E303 standard method for measuring the surface friction properties. The skid-resistant test was performed on all six different texture surfaces with four tests per sample. In all tests, a minimum 12-inch by 12-inch sample size was used. The details of the test setup are shown in figure 76.

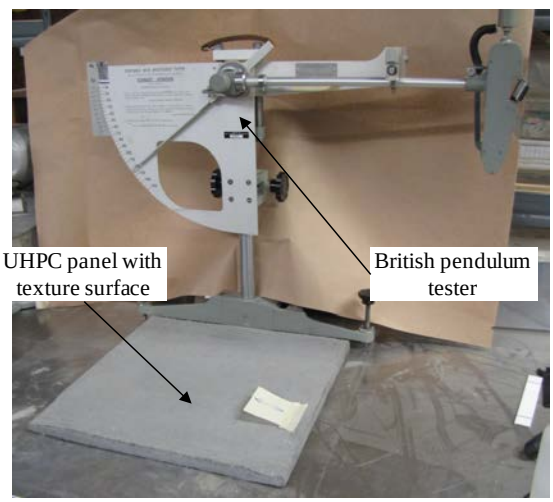

Figure 76. Photo. Test setup for characterization of skid resistance of textures using the British pendulum tester.

The details of the different textures tested and their mean SRV values are provided in table 23.

Table 23. Measured skid resistance values for different textured surfaces using British pendulum tester.

Sample No.	Texture / (Brand)	Texture	Skid Resistance Values (BPN)		Average SRV
1	2/61 Thames / (Reckli)		87,88,88,88		87.75
2	Broom finish / (Architectural Polymers)	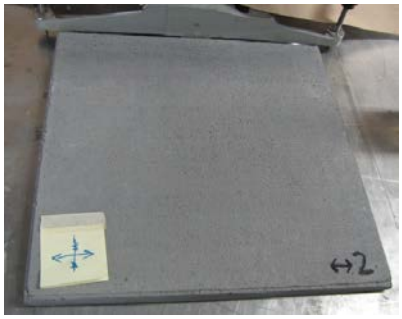	72,70,70,70		70.5
3	2/102 Parana / (Reckli)	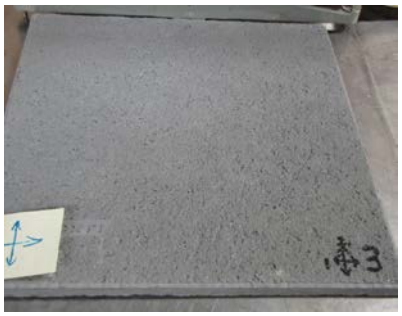	Direction-1	96,96,96,96	96
			Direction-2	90,90,90,90	90
4	Heavy Broom finish / (Architectural Polymers)	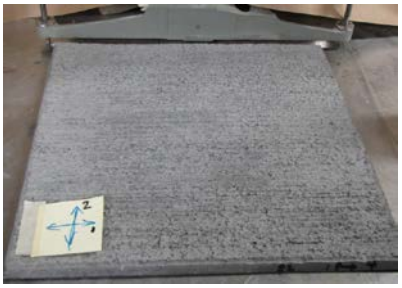	Direction-1	72,75,75,75	74.25
			Direction-2	80,81,80,81	80.5

Sample No.	Texture / (Brand)	Texture	Skid Resistance Values (BPN)		Average SRV
5	Anti Skid / (Fitzgerald Form liners)		80,80,80,81		80.25
6	Carpet / (Fitzgerald Form liners)		Direction-1	62,65,65,65	64.25
			Direction-2	76,75,78,80	76.625

BPN = British pendulum number

Based on the suggested minimum values of skid resistance by the Transport and Road Research Laboratory, all of the tested texture surfaces surpass the minimum required SRV value of 65, satisfying the rideability criteria.[62]

Figure 77 shows a close-up view of the bridge deck surface from the bridge in Wapello County, Iowa. It depicts the smooth transition between the connections and prefabricated waffle panels. Of the different riding surfaces summarized in table 23, 2/102 Parana texture was selected for implementation in the Wapello County project.

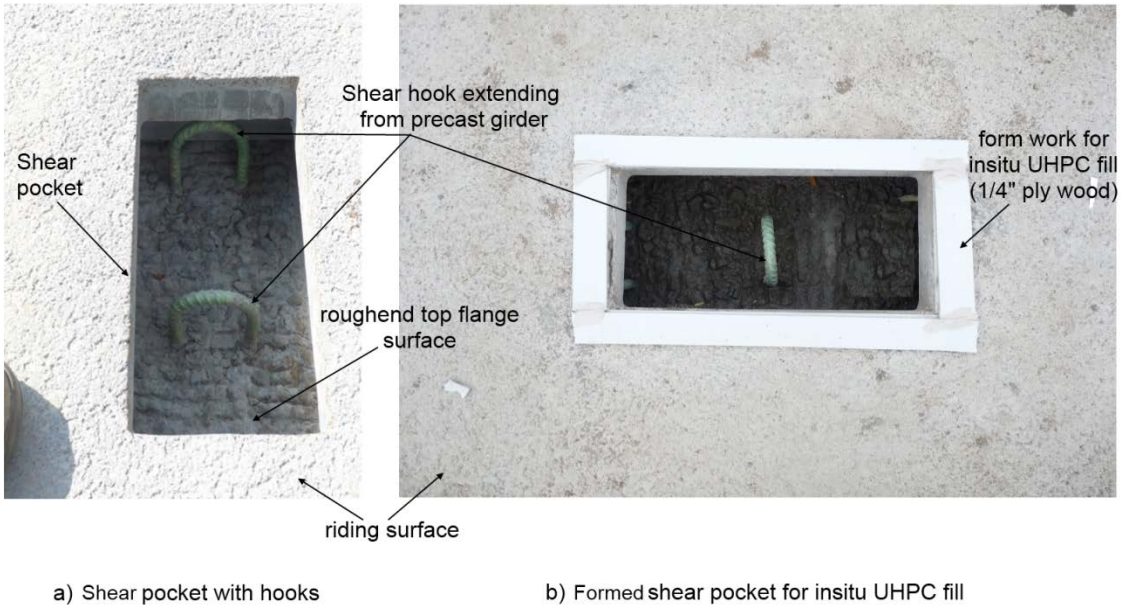

Figure 77. Photo. Close-up of shear pockets and shear hooks at Wapello County, Iowa, waffle deck bridge.

Field Installation

This section describes the steps for installing the UHPC waffle deck panels in the field, which are primarily based on the experience gained in Wapello County.

The precast deck panels were designed to be fully composite with the precast prestressed concrete girders. This was accomplished by providing shear hooks in the precast girder at the shear pocket locations, which were subsequently filled with UHPC (see figure 77).

Following installation of the girders, the half-width precast deck panels are set to grade, spanning between the concrete girders and leveled to the needed elevation by placing shims. At the panel bearings on the beams, an Evazote foam strip is installed to provide a good contact and watertight seal between the precast panels and prestressed concrete girder (see figure 78). Quick-setting spray foam is used to create the watertight seal between panels and girders.

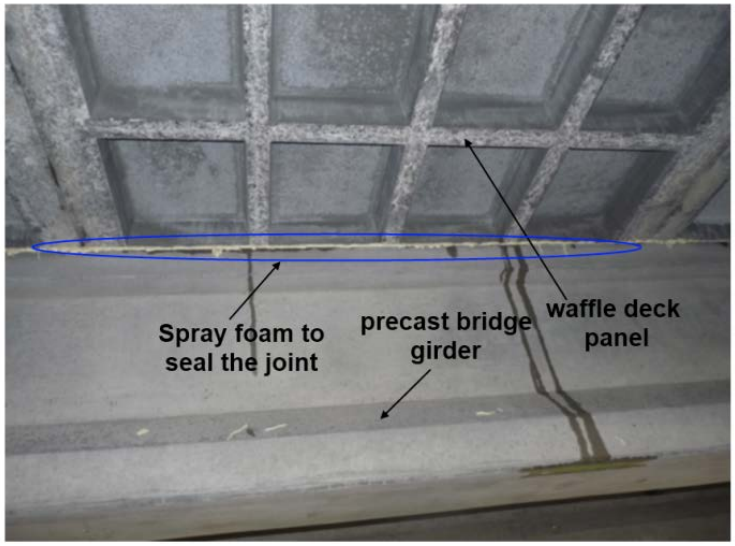

Figure 78. Photo. Watertight seal at panel-to-girder connection using quick setting spray.

Once all panels are installed and tested for moderate water tightness, the connection regions are prepared for field casting of UHPC fill material. Figure 79 shows the installed waffle panels at the Wapello County bridge.

a) Installation of UHPC waffle deck panels

b) Close up view of the panel placement

Figure 79. Photos. Placement of waffle deck panels.

The faces of the precast panels were sandblasted at the precast plant to create a roughened surface to enhance the bond between the precast panel and the joint fill, leading to water tightness of the transverse joint (panel-to-panel joint). In addition, the surface of each precast panel was soaked to saturate surface-dry (SSD) prior to casting the joint fill. Figure 80 provides a close-up view of the transverse and longitudinal connections in the Wapello County bridge.

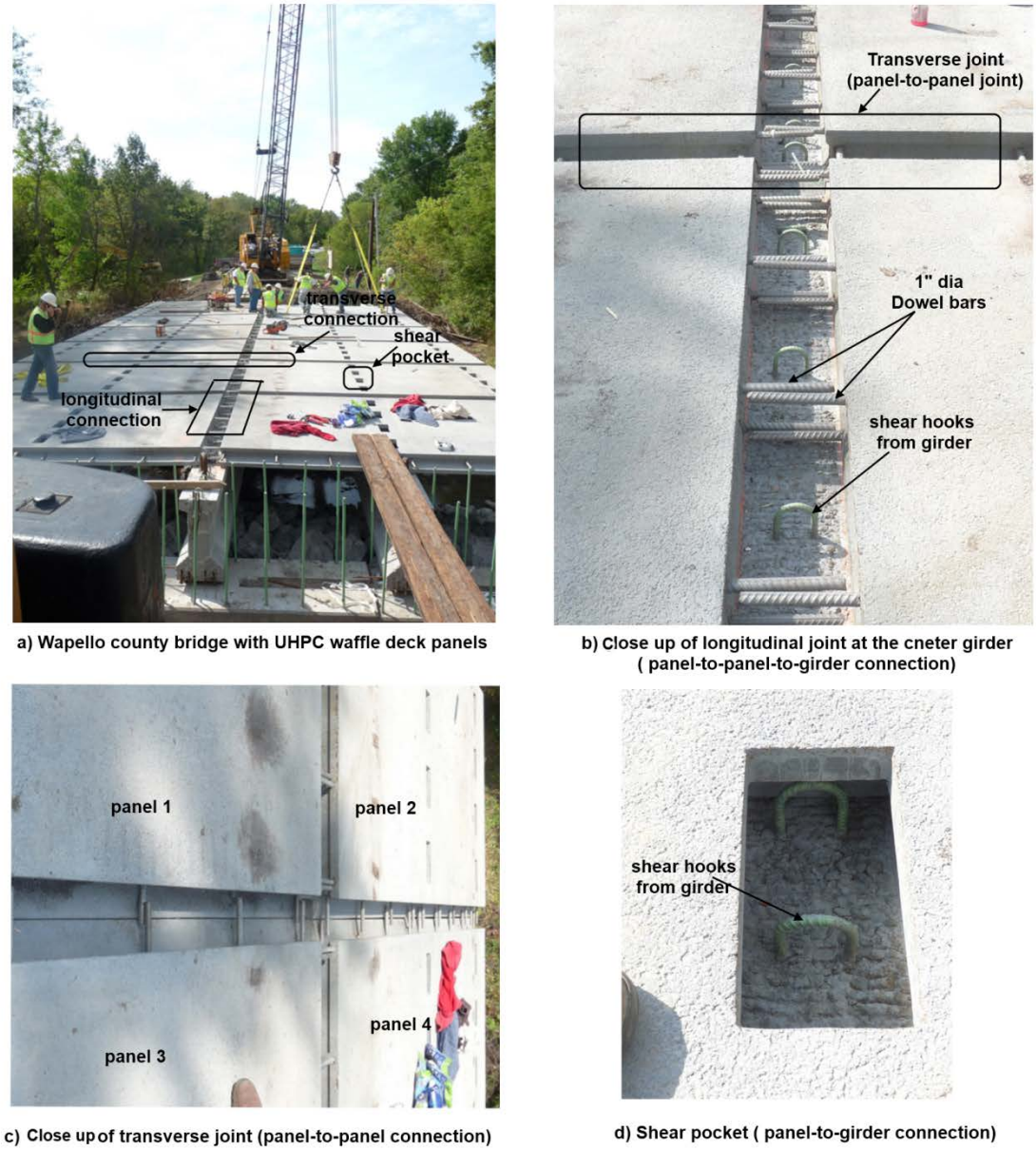

a) Wapello county bridge with UHPC waffle deck panels

b) Close up of longitudinal joint at the cneter girder (panel-to-panel-to-girder connection)

c) Close up of transverse joint (panel-to-panel connection)

d) Shear pocket (panel-to-girder connection)

Figure 80. Photos. Transverse and longitudinal connections.

The UHPC joint fill materials were delivered to the site by the material supplier and set up for batching (see figure 81). A pair of IMER Mortarman 750 mixers was used to batch the in situ joint fill UHPC material. Each mixer was capable of producing 5.12 cubic ft of UHPC per batch, with an average mixing time of 20 minutes. The mixers were run in parallel just off the end of

the bridge, providing a continuous supply of UHPC material and maintaining direct access to the bridge deck. The number and size of mixers needed on a bridge site is determined by the daily joint fill volume requirements of the contractor.

Figure 81. Photos. Batching of UHPC joint fill using IMER Mortarman 750 mixers in field.

The UHPC joint material can be transported to the joints by a power buggy or a wheelbarrow and then placed directly into the joints and shear pockets (see figure 82a). UHPC joint material flows along the longitudinal and transverse joints due to its self-consolidating and self-leveling behavior (see figure 82b). The UHPC should not be vibrated, as that would potentially disrupt the random orientation of the fibers. The completed panel-to-girder shear pocket connections are shown in figure 82c, while figure 82d shows the partially filled longitudinal panel-to-girder connection at the centerline of the bridge.

The white colored strips that can be seen in figure 82 are made from a rigid, waterproof material and have multiple purposes. They provide a 1/4-inch overfill of the UHPC in the joint. As the air entrapped during mixing and placing escapes, the grout settles closer to the top surface of the bridge deck, minimizing further addition of UHPC. Escaped air forms bubbles on the top surface of the connections. The overfill provides a surface slightly above precast panels such that it can be ground completely flush with the deck surface to remove any imperfections.

Figure 82. Photos. Filling of connection regions with in situ UHPC and completed connections.

The joints are covered with form-grade plywood strips to prevent any moisture loss during initial setting (see figure 83) and then allowed to cure until reaching 15,000 psi before opening to traffic. The time needed to reach that compressive strength for the joint fill UHPC material varies depending on the ambient temperature. Typically, at ambient temperatures around 68 °F, a minimum of 4days is needed to reach the desired strength. This time can be reduced by using accelerators or providing external heating sources (such as propane heaters or glycol heating lines).

Figure 83. Photo. Finished transverse connections (panel-to-panel connection) covered with plywood.

During the field curing process, the UHPC material should be ground smooth to remove any high spots and/or overfill. It is critical to grind the connection regions while they are relatively soft (around 5,000 psi); otherwise, the UHPC will be hard on grinding equipment. This early grinding can only be conducted using hand-operated equipment. If the grinding equipment is mounted to a truck, the UHPC must possess vehicular loading strength prior to grinding. Figure 84 shows the surface aspect after grinding. Freckling of the surface may appear where any fibers are exposed to weather due to grinding; this does not have an impact on the overall performance of the joint.

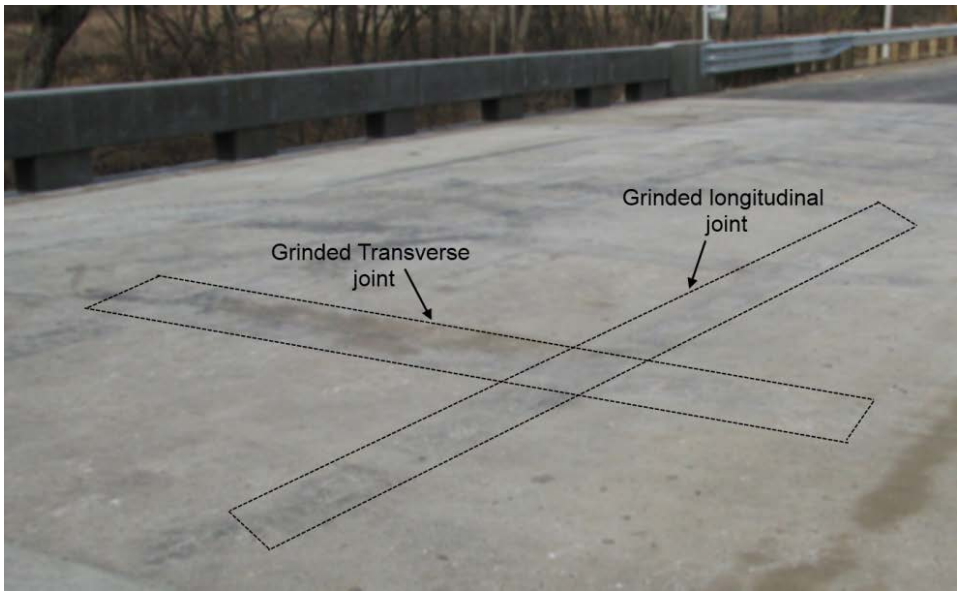

Figure 84. Photo. Close-up of the waffle panel deck after grinding along the transverse and longitudinal deck connections.

CHAPTER 6. SUMMARY AND CONCLUSIONS

SUMMARY

Full-depth, precast, UHPC waffle deck panels with longitudinal and transverse ribs and a viable set of connections suitable for field implementation were developed for this HfL project. Following a successful laboratory validation of the full-scale unit, which consisted of two panels and recommended connections, the waffle deck was installed successfully on a replacement bridge in Wapello County, Iowa. The subsequent load testing confirmed the desirable performance of the UHPC waffle deck bridge. The project described in this report was undertaken as a follow-up study to broaden the applications of UHPC waffle deck panels to new bridges as well as deck replacement projects.

To make the broader applications of UHPC waffle deck panels feasible, this report was formulated as a guide to provide technical and practical information necessary to allow bridge owners to consider the use of UHPC waffle slabs for a wide variety of bridges. Using a series of simple and detailed finite element analysis models, every effort was taken to improve efficiency of design while ensuring safety, integrated versatility, and simplified design calculations.

CONCLUSIONS

This study serves as a guide for complete design, fabrication, and installation of UHPC waffle deck panels with mild steel reinforcement. The conclusions drawn from the development of this design guide, as well as construction and performance of the waffle deck panels in the laboratory and field, are summarized in this section.

Design

The waffle deck panel should be designed to act compositely with the supporting bridge girders under traffic loads. For broader application of the precast deck panel in different bridge types with variable girder spacing, several deck panel configurations with variable transverse and longitudinal rib spacing were developed and evaluated under traffic loads. A maximum girder spacing of 10 ft was considered while arriving at panel and reinforcement details. AASHTO HL-93 truck loading was used to estimate the demand on the waffle deck panel.

- The deck panel should be at least 8 inches thick to satisfy AASHTO requirements and to resist the effects due truck loading.
- The maximum allowable rib spacing in transverse and longitudinal directions is limited to 36 inches.
- The minimum thickness for the slab over the ribs should be taken as 2.5 inches to prevent punching failure under truck loads and ensure adequate cover for reinforcement.
- Two different configurations for transverse rib reinforcement, which are applicable for different girder spacing, are proposed and shown in figure 85. The first configuration

(UWD6T6B) consists of #6 bars at the top and bottom of the transverse rib. The alternate configuration (UWD6T7B) consists of a #7 bar at the bottom and a #6 bar at the top of the transverse rib.

- The cracking moment capacity of the deck panel according to the strip method in the positive and negative bending directions was found to be between 1.86-4.14 k-ft/ft and 5.76-8.17k-ft/ft, respectively, depending on the transverse and longitudinal rib spacing. The cracking moment capacities are presented in tables 18 and 19 in chapter 2.
- The nominal moment capacity of the UWD6T6B deck panel using the equivalent strip method in positive and negative bending directions was found to between 10.19-18.59 k-ft/ft and 23.39-32.98 k-ft/ft, respectively, depending on the transverse and longitudinal rib spacing. The details of the nominal moment capacities are presented in tables 18 and 19 in chapter 2.
- The UWD6T6B configuration can be used for waffle deck panels with any rib configuration (rib spacing < 36 inches) in bridges with a maximum girder spacing of 8.25 ft. This configuration can be used for bridges with a girder spacing of 8.5 to 10 ft if the transverse rib spacing is limited to 21 inches.
- The UWD6T7B configuration can be used for waffle deck panels with variable transverse and longitudinal rib spacing in bridges with a maximum girder spacing of 9.25 ft. For girder spacing of 9.5 to 10 ft, the transverse rib spacing is limited to 30 inches.
- The overhang region in the waffle deck panels should be designed as a solid section rather than a waffle configuration to resist the effects of barrier rail crash loads adequately. Although this region may be tapered without satisfying current AASHTO requirements, economic benefits of this modification are expected to be small.

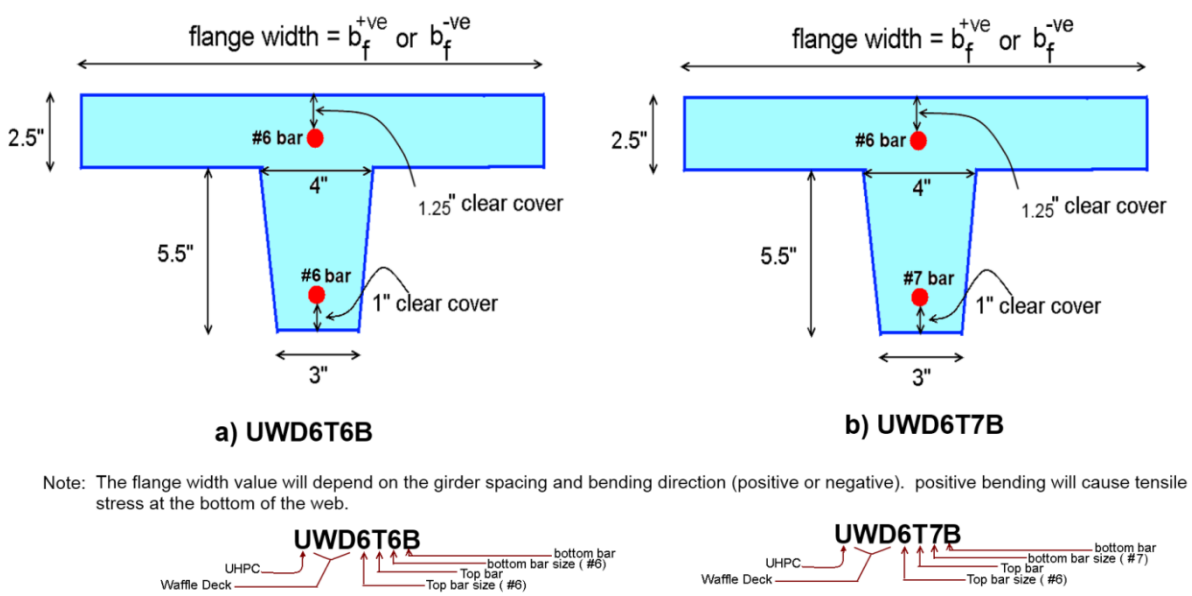

Figure 85. Diagrams. Proposed transverse reinforcement configurations.

Connections

A set of connections suitable for UHPC waffle panels were tested as part of this HfL project and proved satisfactory. While these connections can be used readily, additional connections established especially for full-depth precast panels have been identified as acceptable, as discussed in chapter 3.

While using these connections, it is recommended that all voids in the field be filled with in situ UHPC. With this modification, a designer may take advantage of increased compressive and bond strengths associated with UHPC and simplify the reinforcement details within the connections.

If a connection is expected to experience negative moments (e.g., top of a pier), it is recommended that the connection design include some precompression, such as that due to localized post-tensioning, to keep the connection from experiencing any tensile stresses.

Redecking

Using traditional procedures combined with those recommended in this report, full-depth, precast UHPC waffle deck panels can be used effectively for replacing deteriorated bridge decks. Regardless of the use of steel or concrete girders in existing bridges, old decks should be removed using locally approved methods along with the appropriate guidance provided in chapter 4. The selection of the waffle panels and connections can follow the recommendations in chapters 2 and 3.

Constructions Issues

It is important make sure that the precaster has appropriate training from the UHPC producer for fabrication of the UHPC waffle deck panels and the ability to mix large volumes of UHPC and thermally cure the panel decks. In addition, it is advisable to have the UHPC manufacturer on-site with the contractor when casting the UHPC fill connections in the field, to ensure the expected product quality is achieved.

It is important to engage the supplier of the UHPC in the early stages of project design so that quality control with mixing and placing of UHPC can be satisfied adequately in the precast plant and the field. While an overlay can be used on a UHPC waffle deck, it can also be omitted by integrating a suitable riding surface on the top surface of the panel during construction.

REFERENCES

1. Issa, M. A., Yousif, A. A., and Issa, M. A. "Experimental Behavior of Full-Depth Precast Concrete Panels for Bridge Rehabilitation." *ACI Structural Journal*. V. 97, No. 3, May-June 2000. pp. 397-407.
2. Knudsen, C. V. "Redecking of a Bridge with Precast Concrete." *Civil Engineering*. ASCE, V. 50, No. 4, April 1980. pp. 75-77.
3. Slavis, C. "Precast Concrete Deck Reconstruction." *PCI Journal*. V. 28, No. 4, July-August 1983. pp. 120-135.
4. Berger, R. H. "Full-Depth Modular Precast Prestressed Bridge Decks." Bridges and Culverts. *Transportation Research Record: Journal of the Transportation Research Board*. No. 903. Transportation Research Board of the National Academies. Washington, DC. 1983. pp. 52-59.
5. Issa, M. A., Idriss, A., Kaspar, I. I., and Khayyat, S. K. "Full Depth Precast and Precast, Prestressed Concrete Bridge Deck Panels." *PCI Journal*. January-February 1995, pp. 59-80.
6. Issa, M. A., Cyro do V., Abdalla, H., Islam, M. S., and Issa, M. A. "Performance of Transverse Joint Grout Materials in Full-Depth Precast Concrete Bridge Deck Systems," *Precast/Prestressed Concrete Institute (PCI) Journal*. V. 48, no. 4, July-August 2003. pp. 92-103.
7. Bierwagen, D., and Abu-Hawash, A. "Ultra High Performance Concrete Highway Bridge." Proceedings of the 2005 Mid-Continent Transportation Research Symposium, Ames, Iowa. 2005. pp.1-14.
8. Keierleber, B., Bierwagen, D., Wipf, T., and Abu-Hawash, A. "Design of Buchanan County, Iowa Bridge Using Ultra-High Performance Concrete and Pi-Girder Cross Section." Proceedings of the Precast/Prestressed Concrete Institute National Bridge Conference, Orlando, FL. 2008.
9. Wipf, T. J., Phares, B. M., Sritharan, S., Degen, E. B., and Giesmann, T. M. *Design and Evaluation of a Single-Span Bridge Using Ultra-High Performance Concrete*. IHRB Project TR-529. Iowa State University, Ames, IA. September 2009.
10. Rouse, J. M., Wipf, T. J., Phares, B., Fanous, F., and Berg, O. *Design, Construction, and Field Testing of an Ultra High Performance Concrete Pi-Girder Bridge*. IHRB Project TR-754. Iowa State University, Ames, IA. January 2011.
11. Schmidt, M., and Fehling, E. "Ultra-High-Performance Concrete: Research, Development and Application in Europe." 7th International Symposium on Utilization of High Strength High Performance Concrete, Vol. 1. 2005. pp. 51-77.
12. Graybeal, B. *Material Property Characterization of Ultra-High Performance Concrete*, Federal Highway Administration, Report No. FHWA-HRT-06-103. McLean, VA. 2006.
13. Ahlborn, M., T., Peuse, J., E., Misson, L., D. *Ultra-High-Performance-Concrete for Michigan Bridges Material Performance – Phase I*. Research report RC-1525, Michigan Department of Transportation Construction and Technology Division, Lansing, MI. 2008.
14. Perry, V., and Zakariasen, D. "First Use of Ultra-High Performance Concrete for an Innovative Train Station Canopy." *Concrete Technology Today*, August 2004, Vol. 25, No. 2. pp. 1-2.

15. Kollmorgen, G.A. “Impact of Age and Size on the Mechanical Behavior of and Ultra-High Performance Concrete.” MS Thesis in Civil Engineering, Michigan Technological University, Houghton, MI. 2004.
16. Graybeal, B., and Stone, B. *Compression Response of a Rapid-Strengthening Ultra-High Performance Concrete Formulation*. Federal Highway Administration. Report No. FHWA-HRT-12-065. McLean, VA. 2012.
17. Graybeal, B. *Analysis of an Ultra-High Performance Concrete Two-Way Ribbed Bridge Deck Slab*. TECHBRIEF, FHWA-HRT-07-055. Federal Highway Administration. McLean, VA. 2007.
18. Sritharan, S., Bristow, B., and Perry, V. “Characterizing an Ultra-High Performance Material for Bridge Applications under Extreme Loads.” Proceedings of the 3rd International Symposium on High Performance Concrete, Orlando, FL. 2003.
19. Acker, P., and Behloul, M. Ductal® Technology: A Large Spectrum of Properties, Ultra High Performance Concrete, Kassel, Germany, September 13-15, 2004. pp. 11-23.
20. Association Française de Génie Civil (AFGC). Ultra High Performance Fibre-Reinforced Concretes, Interim Recommendations. AFGC Publication, France. 2002.
21. Gowripalan, N., and Gilbert, R. I. *Design Guidelines for Ductal Prestressed Concrete Beams*. School of Civil and Environmental Engineering, The University of NSW, May 2000. 53 pp.
22. Japan Society of Civil Engineers (JSCE). “Recommendations for Design and Construction of High Performance Fiber Reinforced Cement Composites with Multiple Fine Cracks (HPFRCC).” Concrete Committee – Concrete Engineering Series 82, Japan. 2008.
23. Graybeal, B. *Structural Behavior of Ultra-High Performance Concrete Prestressed I-Girders*. Federal Highway Administration, Report No. FHWA-HRT-06-115. McLean, VA. 2006.
24. Graybeal, B., and Baby, F., “Development of Direct Tension Test Method for Ultra-High-Performance Fiber-Reinforced Concrete.” *ACI Materials Journal*, V. 110, No. 2, March-April 2013. pp. 177-186.
25. Bonneau, O., Poulin, C., Dugat, J., Richard, P., and Aïtcin, P. C. “Reactive Powder Concretes: From Theory to Practice.” *Concrete International*. April, Vol. 18, No. 4. 1996. pp. 47-49.
26. Vande Voort, T. L., Suleiman, M. T., and Sritharan, S. *Design and Performance Verification of UHPC Piles for Deep Foundations*. Final Report IHRB Project TR-558. Iowa State University – Center for Transportation Research and Education. Ames, IA. 2008.
27. American Association of State Highway and Transportation Officials (AASHTO). *AASHTO LRFD Bridge Design Specifications*, 6th edition, Washington, DC. 2010.
28. American Concrete Institute (ACI). Report on High Strength Concrete. ACI 363R-10. ACI. Farmington Hills, MI. 2010.
29. Lee, M. G., Chiu, C. T., and Y. C. Wang. “The Study of Bond Strength and Bond Durability of Reactive Powder Concrete.” *Journal of ASTM International*. July/August, Vol. 2, No. 7. 2005. pp. 104-113.
30. Roux, N., Andrade, C., and Sanjuan, M. A. “Experimental Study of Durability of Reactive Powder Concretes.” *Journal of Materials in Civil Engineering*. February 1996, Vol. 8, No. 1. pp. 1-6.

31. Bonneau, O., Lachemi, M., Dallaire, E., Dugat, J., and Aïtcin, P. C. "Mechanical Properties and Durability of Two Industrial Reactive Powder Concretes." *ACI Materials Journal*. July-August, Vol. 94, No. 4. 1997. pp. 286-290.
32. Schmidt, M., Fehling, E., Teichmann, T., Bunje, K., and Bornemann, R. "Ultra-High Performance Concrete: Perspective for the Precast Concrete Industry." *Concrete Precasting Plant and Technology*. Vol. 69, No. 3. 2003. pp. 16-29.
33. Vernet, C.P. "Ultra-Durable Concretes: Structure at the Micro- and Nanoscale." *MRS Bulletin*. May, Vol. 29, No. 5. 2004. pp. 324-327.
34. VSL Proprietary Limited. Introduction to Ductal® – Frequently Asked Questions. VSL Proprietary Limited. 2003. http://www.ductal.com/Introduction%20to%20 Ductal.pdf.
35. Tuchlinski, D., Heqqer, J., and Kommer, B. "Studies on Prestressed Concrete Beams made from UHPC." *Concrete Precasting Plant and Technology*. Vol. 72, No. 1. 2006. pp. 14-20.
36. Graybeal, B. *Behavior of Field-Cast Ultra-High Performance Concrete Bridge Deck Connections under Cyclic and Static Structural Loading*. FHWA-HRT-11-023, Office of Infrastructure Research & Development, Federal Highway Administration. McLean, VA. 2011.
37. Voo, J. Y., Foster, S. J., Gilbert, R. I., and Gowripalan, N. "Design of Disturbed Regions in Reactive Powder Concrete Bridge Girders." High Performance Materials in Bridges: Proceedings of the International Conference, Kona, Hawaii, July 29-August 3, 2001. Ed. by Azizinamini, A., Yakel, A., and M. Abdelrahman. American Society of Civil Engineers, Reston, VA. pp. 117-127.
38. Heimann, J. *The Implementation of Full Depth UHPC Waffle Bridge Deck Panels: Final Report.* FHWA-HIF-13-031. Federal Highway Administration, McLean, VA. 2013.
39. Aaleti, S., Sritharan, S., Bierwagen, D., and Wipf, T., J. "Structural Behavior of Waffle Bridge Deck Panels and Connections of Precast Ultra-High-Performance Concrete: Experimental Evaluation." *Transportation Research Record: Journal of the Transportation Research Board*. No. 2251. Transportation Research Board of the National Academies, Washington, DC. 2011. pp. 82-92.
40. Aaleti, S., Sritharan, S., Rouse, M., Wipf, T. *Phase1: The Structural Characterization of UHPC Waffle Bridge Deck Panels and Connections*. IHRB Project TR-614. Iowa State University. Ames, Iowa. 2010.
41. Harris, D. K., and Roberts-Wollmann, C. L. *Characterization of the Punching Shear Capacity of Thin Ultra-High Performance Concrete Slabs*. VTRC 05-CR26 final report, Virginia Department of Transportation. 2005.
42. Rouse, M., Honarvar, E., Aaleti, S., Sritharan, S., and Wipf, T. *Phase 2: The Structural Characterization of UHPC Waffle Bridge Deck Panels and Connections*. IHRB Project TR-614 Report. Iowa State University, Ames, IA. 2012.
43. Iowa Department of Transportation. LRFD Bridge Design Manual. http://www.iowadot.gov/bridge/policy/52DecklrfdJa13.pdf. Accessed March 2013.
44. Aaleti, S., Sritharan, S., and Abu-Hawash, A. "Innovative UHPC-Normal oncrete composite bridge deck," 2nd International Symposium on Ultra-High Performance Fibre- Reinforced Concrete (UHPFRC): Designing and Building with UHPFRC: From Innovation to Large Scale Realizations, France, 2013.
45. Marcu, S., Green, G., and Graybeal, B. "Performance of Deck-Level Connections between Precast Concrete Components – Concept and Early Results." PCI National Bridge Conference, Nashville, TN. September 29-October 2, 2012.

46. French, C. E., Shield, C. K., Klaseus, D., Smith, M., Eriksson, W., Ma, Z. J., Zhu, P., Lewis, S., and Chapman, C. E. *Cast-in-Place Concrete Connections for Precast Deck Systems*. NCHRP Web-Only Document 173. National Cooperative Highway Research Program. Transportation Research Board of the National Academies. Washington, DC. January 2011.
47. Hartwell, D. "Laboratory Testing of Ultra High Performance Concrete Deck Joints for Use in Accelerated Bridge Construction." MS thesis. Iowa State University. 2011.
48. Culmo, M. *Connection Details for Prefabricated Bridge Elements and Systems*. U.S. DOT, Federal Highway Administration. McLean, VA. March 2009.
49. Precast/Prestressed Concrete Institute (PCI). *State-of-the-Art Report on Full-Depth Precast Concrete Bridge Deck Panels*. PCI. Chicago, IL. 2011.
50. Badie, S. S., and Tadros, M. K. *Full-Depth Precast Concrete Bridge Deck Panel Systems*. NCHRP Report 584. National Cooperative Highway Research Program. Transportation Research Board of the National Academies. Washington, DC. 2008.
51. Graybeal, B. *Ultra-High Performance Concrete Composite Connections for Precast Concrete Bridge Decks*. Federal Highway Administration. Report No. FHWA-HRT-12-042. McLean, VA. 2012.
52. Bank, L. C., Oliva, M. G., and Russell, J. S. *Full Depth Precast Concrete Highway Bridge Decks*. Report to the Wisconsin Department of Transportation. University of Wisconsin, Madison, WI. October 2007.
53. Carter, J. W., III, Pilgrim, T., Hubbard, F. K., Poehnelt, T., and Oliva, M. "Wisconsin's Use of Full-Depth Precast Concrete Deck Panels Keeps Interstate 90 Open to Traffic." *PCI Journal*. January-February 2007.
54. Hieber, D. G., Wacker, J. M., Eberhard, M. O., and Stanton, J. F. *State-of-the-Art Report on Precast Concrete Systems for Rapid Construction of Bridges*. Washington State Department of Transportation. March 2005.
55. Frosch, R. J., Ramirez, J. A., and Price, S. *Innovative Bridge Construction Program: Implementation of Full-Depth Bridge Deck Panels in Indiana*. Publication FHWA/IN/JTRP-2009/34. Joint Transportation Research Program, Indiana Department of Transportation and Purdue University, West Lafayette, IN. 2010.
56. Wisconsin Department of Transportation. *LRFD Bridge Manual, Chapter 40 – Bridge Rehabilitation*. Madison, WI. July 2012.
57. Gordon, S. R., and May, I. M. "Precast Deck Systems for Steel-Concrete Composite Bridges." Proceedings of the Institution of Civil Engineers. Bridge Engineering 160. Issue BE1. 2007. pp. 25-35.
58. Badie, S. S., Morgan Girgis, A., Tadros, M., and Nguyen, N. "Relaxing the Stud Spacing Limit for Full-Depth Precast Concrete Deck Panels Supported on Steel Girders (Phase I)." *Journal of Bridge Engineering*. 15.5. 2010. pp. 482-492.
59. Mekulasi, F. "Horizontal Shear Connectors for Precast Prestressed Bridge Deck Panels." MS thesis. Virginia Polytechnic Institute and State University. 2002.
60. Oliva, G. M., Bank, C. L., and Russell, S. J. "Full Depth Precast Concrete Highway Bridge Decks." Report to the Wisconsin Department of Transportation, October 2007.
61. Utah Department of Transportation. *Full Depth Precast Concrete Deck Panel Manual*. Utah DOT. Salt Lake City, UT. 2008.
62. Transport and Road Research Laboratory (TRRL). "Instructions for Using the Portable Skid Resistance Tester." Road Note 27. Transport and Road Research Laboratory HMSO. Wokingham, Berkshire, UK. 1969.

ACKNOWLEDGMENTS

The authors would like to thank the Federal Highway Administration (FHWA) Highways for LIFE (HfL) program and the Iowa Department of Transportation (DOT) Iowa Highway Research Board (IHRB) for co-sponsoring and administrating this research project.

Special thanks are given to Ahmad Abu-Hawash, chief structural engineer with the Iowa DOT Office of Bridges and Structures for his coordination and valuable input. In addition, valuable feedback was received from a number of people, including Benjamin Graybeal with the FHWA Turner-Fairbank Highway Research Center, Dean Bierwagen, Kenneth Dunker, Ping Lu, and Michael Nop with the Iowa DOT, Mathew Royce with the New York State DOT, Bruce Johnson with the Oregon DOT, Claude Napier with the Virginia DOT, and Brian Moore with Wapello County, Iowa. The authors also want to acknowledge Kyle Nachuk and Vic Perry from Lafarge for sharing their expertise on UHPC, field casting of connections, and casting of waffle deck panels at the precast plant. Coreslab Structures (Omaha), Inc. produced the UHPC waffle decks for the laboratory tests and field implementation, and their efforts, including the contributions made by Todd Culp and John Heimann, are greatly appreciated.