Center for Transportation Research and Education

Performance of Cold In-Place Recycled Roads

tech transfer summary

Cold in-place recycling is a popular method for rehabilitating asphalt roads, but research is needed to make performance more predictable.

June 2007

RESEARCH PROJECT TITLE
Evaluation of Long-Term Field Performance of Cold In-Place Recycled Roads

SPONSORS
Iowa Highway Research Board (TR-502)
Iowa Department of Transportation
(CTRE Project 03-160)

PRINCIPAL INVESTIGATORS
Charles Jahren
Associate Professor of Civil, Construction, and Environmental Engineering
Iowa State University
515-294-3892
cjahren@iastate.edu

Hosin "David" Lee
Associate Professor of Civil and Environmental Engineering
University of Iowa
319-384-0831
hlee@engineering.uiowa.edu

MORE INFORMATION
www.ctre.iastate.edu

CTRE
Iowa State University
2711 S. Loop Drive, Suite 4700
Ames, IA 50010-8664
515-294-8103

The mission of the Center for Transportation Research and Education (CTRE) at Iowa State University is to develop and implement innovative methods, materials, and technologies for improving transportation efficiency, safety, and reliability while improving the learning environment of students, faculty, and staff in transportation-related fields.

The sponsors of this research are not responsible for the accuracy of the information presented herein. The conclusions expressed in this publication are not necessarily those of the sponsors.

IOWA STATE UNIVERSITY

Objectives

- Investigate the relationships between road performance and the following: age of the recycled pavement, cumulative traffic volume, and subgrade support conditions.
- Understand these relationships in terms of the aged engineering properties of the cold in-place recycled (CIR) materials.
- Consider changes that can be made to design, material selection, and construction to improve the performance of future recycled roads.

Problem Statement

Cold in-place recycling has become an attractive and popular method for rehabilitating asphalt roads that have good subgrade support and are suffering distress related to non-structural aging and cracking of the pavement layer. However, CIR pavement performance remains somewhat unpredictable. Transportation officials have observed roads recycled under similar weather and construction conditions perform very differently for no clear reason. Moreover, a rational mix design has not yet been developed, and there is no clear understanding of the cause-effect relationships between the choices made during the design/construction process and the resulting performance.

Research

Researchers from the University of Iowa and Iowa State University examined a sample of 24 CIR roads in Iowa that had been rehabilitated between 1986 and 2004: 17 were selected from a sample that had been previously studied in 1996, and 7 were selected from a group of roads that were rehabilitated after 1999. The roads were classified according to average annual daily traffic, CIR age, and subgrade support condition.

For each road, field investigations assessed actual CIR pavement performance and laboratory investigations assessed the CIR material properties associated with performance:

- A field distress survey was conducted by capturing digital pavement images, analyzing the images, and calculating a pavement condition index (PCI) value for each pavement. Rut measurements were collected manually. Distresses measured included rutting; patching; and transverse, longitudinal, block, and alligator cracking.
- The ISU researchers inferred structural support and layer stiffness from the results of falling weight deflectometer (FWD) testing and computer analysis.

Continued on following page

Continued from first page

- In the laboratory, the ISU researchers investigated the material properties of the aged CIR layer using core samples taken of the CIR material. Tests included indirect tensile strength (IDT) testing and tests of the asphalt binder properties.

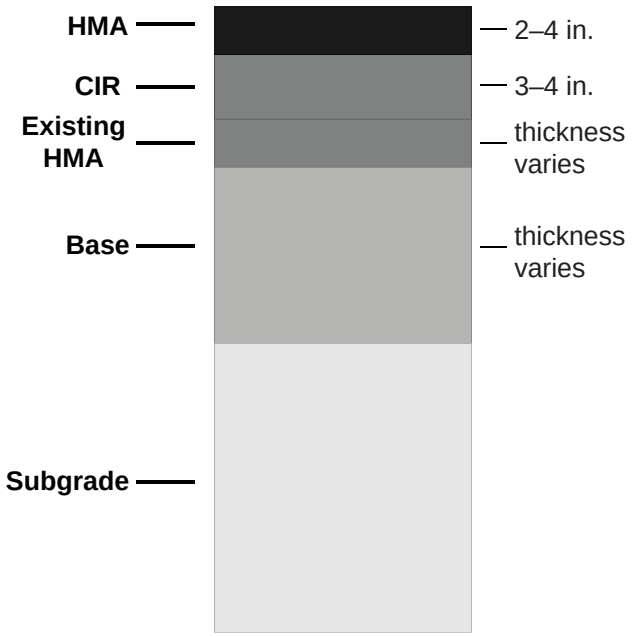

Typical pavement layers for a road rehabilitated with CIR

Key Findings

- Based on comparisons of pavement condition and pavement age, the predicted service life for CIR roads is 21 to 25 years.
- Sample roads with good subgrade support have longer predicted service lives (up to 34 years) than sample roads with poor subgrade support (up to 22 years).
- Because the low-traffic roads had predicted service lives similar to those of the high-traffic roads, traffic level did not seem to affect pavement performance as much as subgrade support. Particularly, all pavements with good subgrade support did not perform differently under different traffic conditions. However, all but two of the roads studied had traffic levels less than 2,000 AADT.
- Rutting, patching, and edge cracking increased mostly on pavements with poor subgrade support. Over time, block cracking converted to alligator cracking for some pavements and longitudinal cracking increased. Transverse cracking did not change significantly.
- The results of this study support the theory that the CIR pavement layer acts as a stress relieving layer. Therefore, within the range of data analyzed, a smaller modulus value (lower stiffness) and a higher Va value (more porosity) for the CIR layer indicate that better performance is expected. However, it is certain that if the CIR modulus is too low or the Va is too high, poor performance will result.
- Within the range of data analyzed, higher wet indirect tensile strength values significantly and positively affected the performance of low-traffic roads.
- In the mathematical models for both the set of high-traffic roads and the set of all 24 CIR roads, a higher cumulative traffic level is associated with lower relative pavement performance.

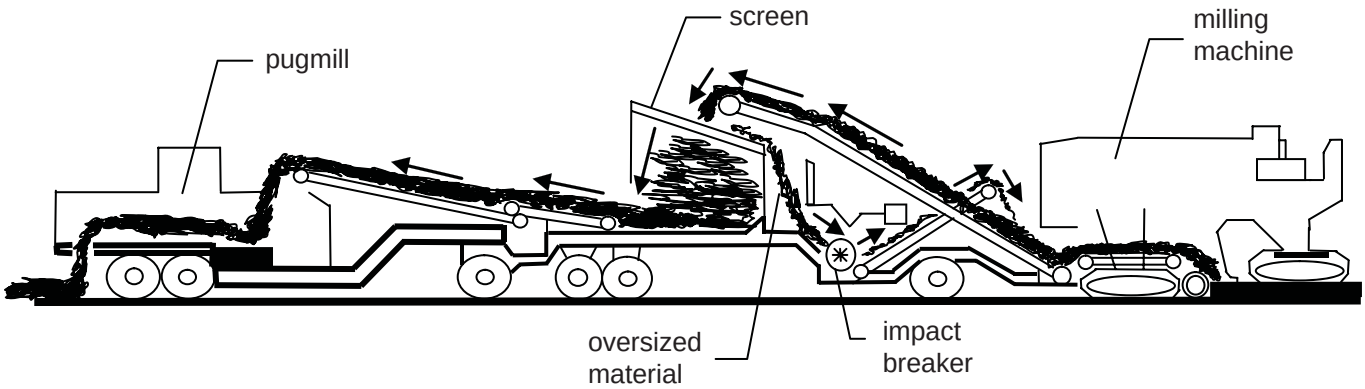

Diagram of a typical CIR milling, screening, crushing and pugmill unit, traveling left to right, paving and compaction units not shown (based on Jahren et al., 1998, Review of Cold In-Place Recycled Asphalt Concrete Projects, IHRB Project HR-392*)*

Recommended Implementation

The results of this research project may be immediately implemented in the following ways:

- The service life predictions developed from this research can be used for economic analysis and network planning.
- Pavement rehabilitation selection and life-cycle cost analyses should reflect the CIR performance curves developed in this study.
- Special attention should be given to providing proper subgrade support and using proper CIR mixture materials on high-volume CIR roads. Decision makers should consider using FWD or dynamic cone penetrometer testing to evaluate the subgrade's ability to provide proper support.
- On lower volume CIR roads, additional efforts should focus on avoiding deterioration caused by environmental factors.
- Design and construction specifications and procedures should reflect the conclusion that a less stiff and more porous CIR layer performs very well. However, stiffness and air void values outside the ranges analyzed in this report will likely result in poor performance. Investigators should therefore develop preferred ranges of air voids and stiffness values. These ranges are likely to be different from those of HMA.

The results of this research will be distributed through the Iowa DOT and Local Technical Assistance Program, and the performance curves for the pavements studied will be shared with pavement design engineers and local systems engineers.

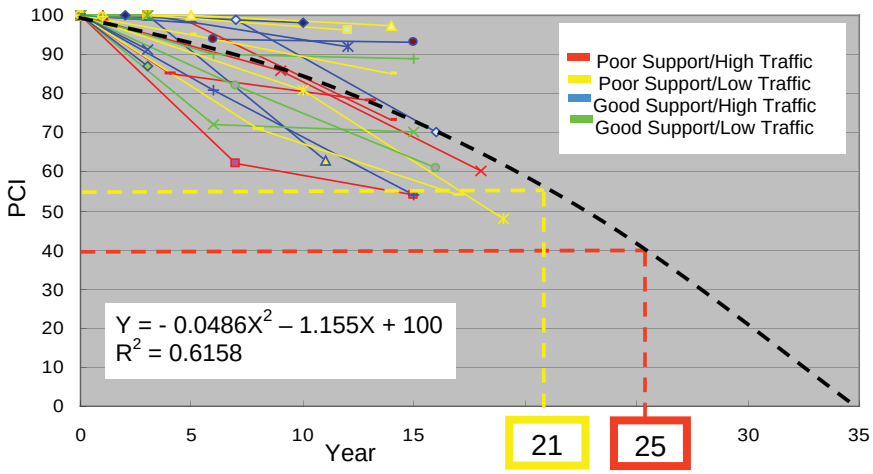

Performance curves for all pavements studied, showing upper (red) and lower (yellow) estimates for predicted service life

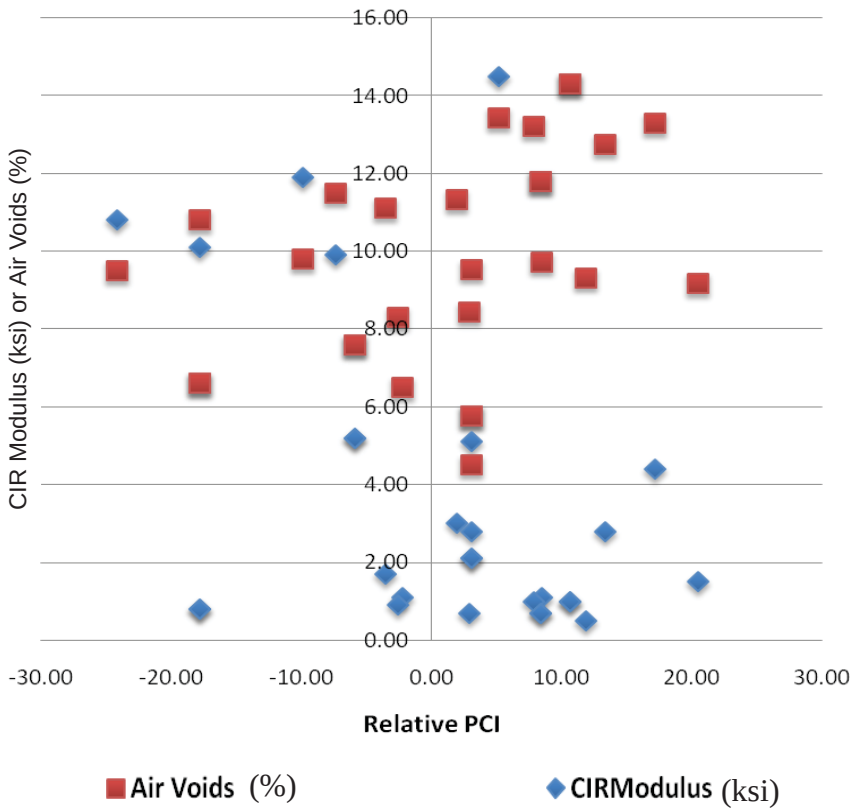

Selected material properties plotted against relative PCI

Recommended Refinements through Additional Research

- Future investigators should re-evaluate the required sample size necessary for refining the conclusions of this investigation. Data from more core samples, FWD tests, and performance surveys may provide statistically significant results in other areas of investigation.
- Further evaluation is needed before the proper mix design parameters can be specified. Field data from existing CIR layers need to be correlated with laboratory-prepared mix design data.
- The study's performance curves are based on sets of two data points per project. A third performance measurement in approximately 2009 will improve confidence in the performance curves.
- The effects of the CIR layer need to be isolated from the effects of the other layers in the pavement system. A study with a larger sample size will contain sufficient information to distinguish the effects of the various layers.
- The variables studied during this project could not explain the specific causes of rolled-down cracking and rutting; further research is needed on this issue.
- Remaining questions include the performance of CIR projects that experience higher truck traffic and the effectiveness of specific asphalt stabilization agents (emulsion, foamed, engineered emulsion).

Operation of the dynamic cone penetrometer

Photograph of a typical CIR recycling train