Visit the TFHRC website at www.tfhrc.gov/

Hydraulics of Iowa DOT Slope-Tapered Pipe Culverts

FHWA-RD-01-077

JUNE 2001

U.S. Department of Transportation
Federal Highway Administration

Research, Development, and Technology
Turner-Fairbank Highway Research Center
6300 Georgetown Pike
McLean, VA 22101-2296

FOREWORD

This report documents a laboratory study that was done for the Iowa DOT to evaluate the hydraulic characteristics of a special improved pipe inlet culvert comprised of off-the-shelf precast components. This report is primarily of interest to the Iowa DOT but will be of interest to drainage engineers in general who would like to consider unique culvert designs to improve performance. This report is being distributed as a web document only as a laboratory report from the TFHRC hydraulic laboratory.

T. Paul Teng, P.E.
Director, Office of Infrastructure
Research and Development

NOTICE

This document is disseminated under the sponsorship of the Department of Transportation in the interest of information exchange. The United States Government assumes no liability for its contents or use thereof. this report does not constitute a standard, specification, or regulation.

The United States Government does not endorse products or manufacturers. Trade and manufacturers' names appear in this report only because they are considered essential to the object of the document.

Technical Report Documentation Page

1. Report No.	2. Government Accession No.	3. Recipient's Catalog No.
FHWA-RD-01-0077		

4. Title and Subtitle	5. Report Date
HYDRAULICS OF SLOPE-TAPERED PIPE CULVERTS	
	6. Performing Organization Code
	8. Performing Organization Report No.
7. Author(s) Frank Graziano, Stuart Stein, Ed Umbrell, and Brett Martin	
9. Performing Organization Name and Address GKY and Associates, Inc. 5411-E Backlick Road Springfield, VA 22151	10. Work Unit No. (TRAIS)
	11. Contract or Grant No. DTFH61-95-C-00066
	13. Type of Report and Period Covered Final Report 1996-1998
12. Sponsoring Agency Name and Address Office of Infrastructure Research and Development Federal Highway Administration 6300 Georgetown Pike McLean, VA 22101-2296	
	14. Sponsoring Agency Code

15. Supplementary Notes

Contracting Officer's Technical Representative (COTR): J. Sterling Jones, HRDI

16. Abstract

This report updates the Iowa Department of Transportation (DOT) design procedures for circular, slope-tapered concrete culverts. The current practice is to use the design coefficients for a square-edged, circular concrete culvert with a headwall that are found in Hydraulic Series No. 5 (HDS-5). New inlet control design constants and entrance loss coefficients were calculated for the slope-tapered culverts and then compared with the HDS-5 coefficients (square edge). In addition, various reducer lengths and taper ratios were also studied to determine what impact, if any, they have on the design coefficients. All of the laboratory testing was done at the Federal Highway Administration's Turner-Fairbank Highway Research Center located in McLean, Virginia.

17. Key Words	18. Distribution Statement
Culverts, culvert design coefficients, inlet control, outlet control, hydraulic design	No restrictions. This document is available to the public through the National Technical Information Service, Springfield, VA 22161.

19. Security Classif. (of this report)	20. Security Classif. (of this page)	21. No. of Pages	22. Price
Unclassified	Unclassified	103	

Form DOT F 1700.7 (8-72) Reproduction of completed page authorized

SI* (MODERN METRIC) CONVERSION FACTORS

APPROXIMATE CONVERSIONS TO SI UNITS

Symbol	When You Know	Multiply By	To Find	Symbol
		LENGTH		
in	inches	25.4	millimeters	mm
ft	feet	0.305	meters	m
yd	yards	0.914	meters	m
mi	miles	1.61	kilometers	km
		AREA		
in^2	square inches	645.2	square millimeters	mm^2
ft^2	square feet	0.093	square meters	m^2
yd^2	square yards	0.836	square meters	m^2
ac	acres	0.405	hectares	ha
mi^2	square miles	2.59	square kilometers	km^2
		VOLUME		
fl oz	fluid ounces	29.57	milliliters	mL
gal	gallons	3.785	liters	L
ft^3	cubic feet	0.028	cubic meters	m^3
yd^3	cubic yards	0.765	cubic meters	m^3
NOTE: Volumes greater than 1000 l shall be shown in m^3.				
		MASS		
oz	ounces	28.35	grams	g
lb	pounds	0.454	kilograms	kg
T	short tons (2000 lb)	0.907	megagrams (or "metric ton")	Mg (or "t")
		TEMPERATURE (exact)		
°F	Fahrenheit temperature	5(F-32)/9 or (F-32)/1.8	Celcius temperature	°C
		ILLUMINATION		
fc	foot-candles	10.76	lux	lx
fl	foot-Lamberts	3.426	candela/m^2	cd/m^2
		FORCE and PRESSURE or STRESS		
lbf	poundforce	4.45	newtons	N
lbf/in^2	poundforce per square inch	6.89	kilopascals	kPa

APPROXIMATE CONVERSIONS FROM SI UNITS

Symbol	When You Know	Multiply By	To Find	Symbol
		LENGTH		
mm	millimeters	0.039	inches	in
m	meters	3.28	feet	ft
m	meters	1.09	yards	yd
km	kilometers	0.621	miles	mi
		AREA		
mm^2	square millimeters	0.0016	square inches	in^2
m^2	square meters	10.764	square feet	ft^2
m^2	square meters	1.195	square yards	yd^2
ha	hectares	2.47	acres	ac
km^2	square kilometers	0.386	square miles	mi^2
		VOLUME		
mL	milliliters	0.034	fluid ounces	fl oz
L	liters	0.264	gallons	gal
m^3	cubic meters	35.71	cubic feet	ft^3
m^3	cubic meters	1.307	cubic yards	yd^3
		MASS		
g	grams	0.035	ounces	oz
kg	kilograms	2.202	pounds	lb
Mg (or "t")	megagrams (or "metric ton")	1.103	short tons (2000 lb)	T
		TEMPERATURE (exact)		
°C	Celcius temperature	1.8C + 32	Fahrenheit temperature	°F
		ILLUMINATION		
lx	lux	0.0929	foot-candles	fc
cd/m^2	candela/m^2	0.2919	foot-Lamberts	fl
		FORCE and PRESSURE or STRESS		
N	newtons	0.225	poundforce	lbf
kPa	kilopascals	0.145	poundforce per square inch	lbf/in^2

* SI is the symbol for the International System of Units. Appropriate rounding should be made to comply with Section 4 of ASTM E380.

(Revised September 1993)

TABLE OF CONTENTS

Page No.

1. INTRODUCTION 1
2. EXPERIMENTAL SETUP 2
3. TEST MATRIX 12
4. CULVERT ANALYSIS AND RESULTS 15
5. DISCUSSION OF RESULTS 19
6. CONCLUSIONS 20
7. ADDITIONAL STUDIES 23
APPENDIX A. CALCULATING SPECIFIC HEAD AT CRITICAL DEPTH 35
APPENDIX B. LABORATORY DATA 38

LIST OF TABLES

Page No.

Table 1. Iowa DOT guidelines 12
Table 2. Test matrix 13
Table 3. Inlet control design coefficients (English units) 16
Table 4. Outlet control design coefficients 19
Table 5. Summary of inlet control design coefficients 21
Table 6. Summary of outlet control entrance loss coefficients (without friction losses) 22
Table 7. Summary of coefficients for Iowa prefabricated inlet and square-edge inlet with headwall 23

LIST OF FIGURES

Page No.

Figure 1. Experimental setup 2
Figure 2. Typical setup 3
Figure 3. Inlet #13 – Prefabricated inlet scaled for a 48-in (1219-mm) inlet pipe. 4
Figure 4. Prefabricated inlet scaled for a 78-in (1981-mm) inlet pipe. 5
Figure 5. 20-degree elbow. 6
Figure 6. Reducers used for runs 10-14, scaled for 48-in (1219-mm) inlet pipe. 7
Figure 7. Reducers used for runs 1-5, scaled for 78-in (1981-mm) inlet. 8
Figure 8. Reducers used for runs 6-8, scaled for 78-in (1981-mm) inlet. 9
Figure 9. Reducers used for runs 15-17, scaled for 48-in (1219-mm) inlet. 10
Figure 10. Calculation of He,tot for outlet control runs 11
Figure 11. Comparison plot of the three unsubmerged benchmark inlets. 24
Figure 12. Comparison plot of the submerged benchmark inlets. 25
Figure 13. Reducer length effect for D_1/D_2 = 11.5 / 8.625. 26
Figure 14. Reducer length effect for D_1/D_2 = 11.5 / 8.75. 27
Figure 15. Reducer length effect for D_1/D_2 = 11.5 / 9.5. 28
Figure 16. Reducer length effect for D_1/D_2 = 11.5 / 10.0. 29
Figure 17. Diameter reduction effect – One reducer. 30
Figure 18. Diameter reduction effect – Two reducers. 31
Figure 19. Diameter reduction effect – Three reducers. 32
Figure 20. Iowa DOT nomograph for calculating specific head. 33
Figure 21. Comparison plot of Iowa DOT nomograph H_c versus calculated H_c. 34
Figure 22. Geometric parameters for pipes flowing partially full. 36

1. INTRODUCTION

The purpose of this research report is to update the Iowa Department of Transportation (DOT) design procedures for circular, slope-tapered concrete culverts. The current practice is to use the design coefficients for a square-edged, circular concrete culvert with a headwall that are found in Hydraulic Series No. 5 (HDS-5). New inlet control design constants and entrance loss coefficients were calculated for the slope-tapered culverts and were then compared with the HDS-5 coefficients (square edge). In addition, various reducer lengths and taper ratios were also studied to determine what impact, if any, they have on the design coefficients. All of the laboratory testing was done at the Federal Highway Administration's Turner-Fairbank Highway Research Center located in McLean, Virginia.

2. EXPERIMENTAL SETUP

The experimental setup was constructed primarily of plywood and consisted of a 2.43-m-long by 2.43-m-wide headbox, and a 1.21-m-wide by 2.43-m-long tailbox, which was located 4.5 m downstream of the headbox. The slope-tapered inlet and culvert barrel spanned the 4.5 m between the headbox and the tailbox. The test matrix included two Iowa DOT precast culvert inlets, a 20-degree elbow, 11 reducers, and 4 different culvert barrel diameters. Prototype-to-model scaling ratios of 6.783 to 1.0 and 4.174 to 1.0 were used.

A sketch of the experimental setup is shown in figure 1. The elbows and culvert barrels were constructed of clear plexiglass. The two inlets and the reducers were fabricated out of galvanized sheet metal. For each test condition, an inlet was connected to the upstream end of the elbow and a reducer was attached to the downstream end. These three pieces formed the slope-tapered inlet. A 3.66-m-long pipe was attached to the downstream end of the reducer. A detailed drawing of the slope-tapered inlet is shown in figure 2. The dimensions for the two Iowa DOT precast inlets that were tested are shown in figures 3 and 4. The 20-degree elbow section is shown in figure 5. The 11 reducers that were tested are detailed in figures 6, 7, 8, and 9.

Fourteen pressure ports were inserted along the bottom of the culvert setup to measure hydraulic depth. These depths were measured using a pressure transducer and the Labtech Notebook software package. Two in-line electro-magnetic flow tubes measured the discharge.

Water entered the headbox through two inflow pipes and flowed over a broad-crested weir. This helped produce a uniform flow field and reduced the upstream velocity to virtually zero. The flow entered the culvert inlet, passed through the elbow, reducer, and barrel, and was discharged into the tailbox. The tailbox had an adjustable tailgate that created a backwater effect that was used to study the culverts under outlet control conditions.

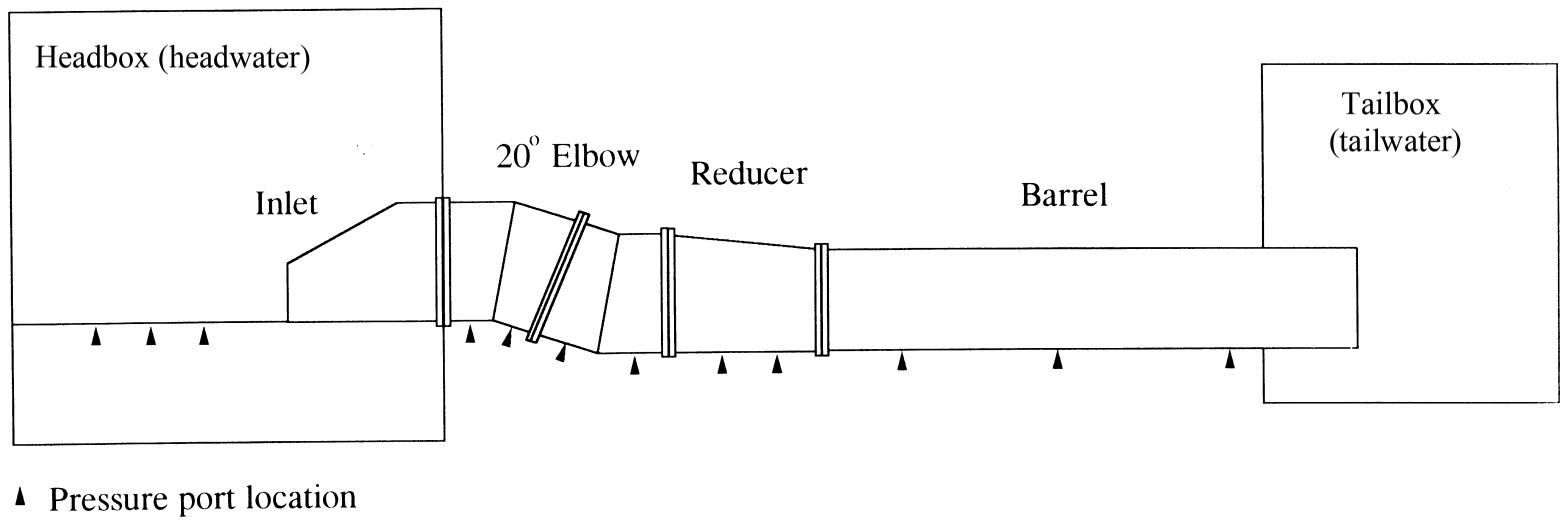

Figure 1. Experimental setup.

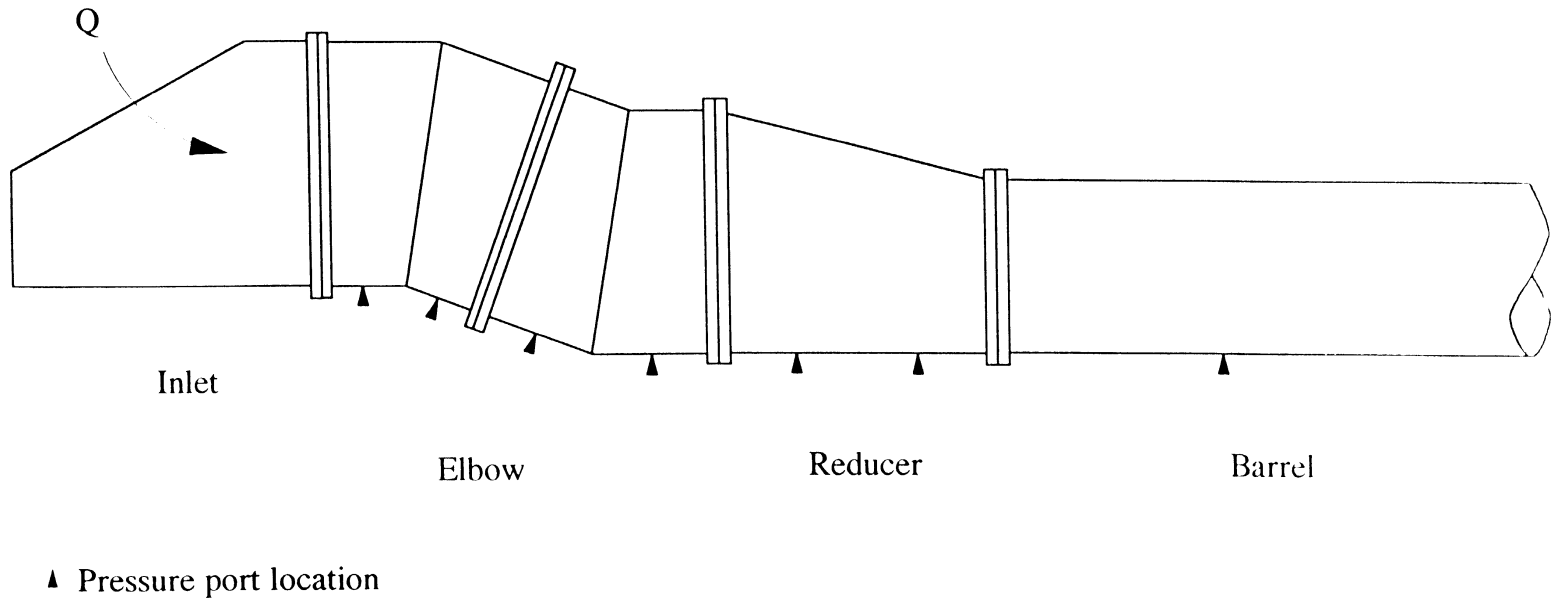

Figure 2. Typical setup.

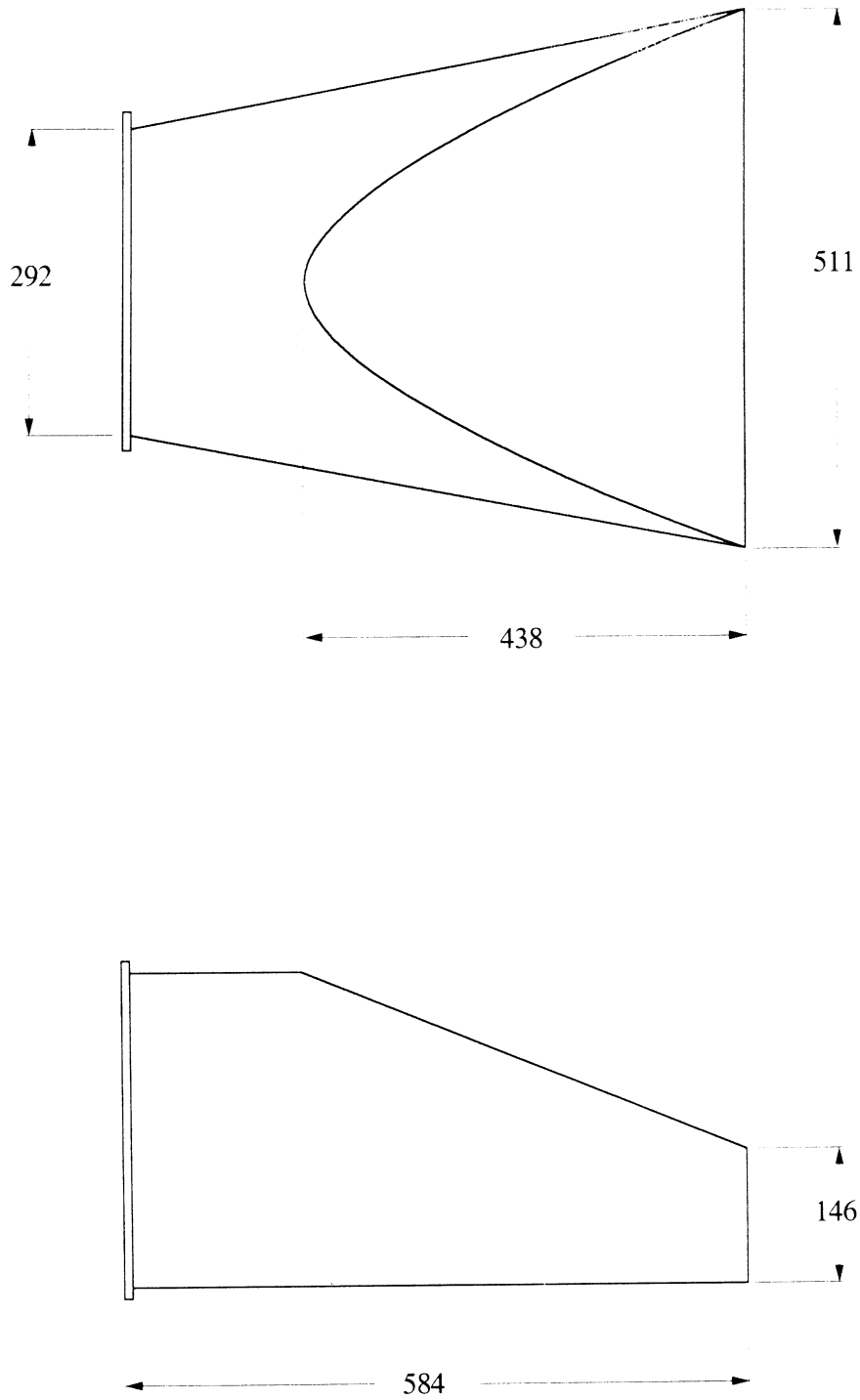

Note: All dimensions are in mm.

Figure 3. Inlet #13 – Prefabricated inlet scaled for a 48-in (1219-mm) inlet pipe.

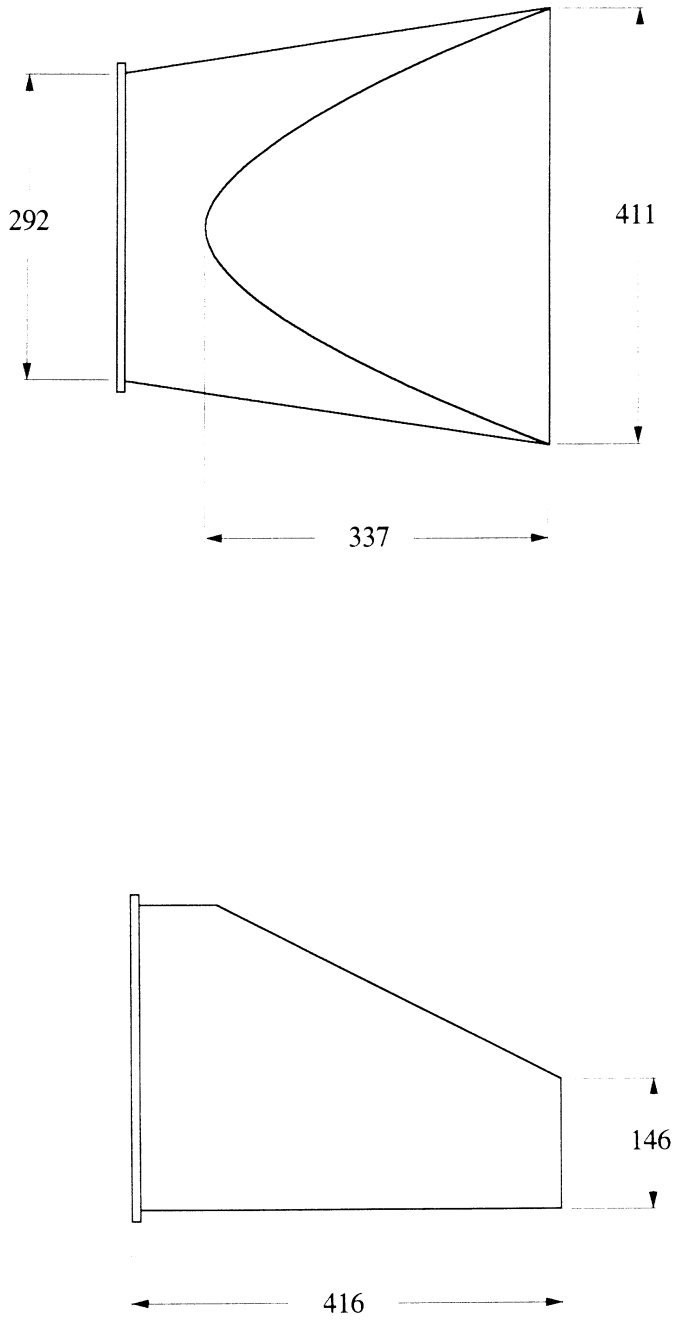

Note: All dimensions are in mm.

Figure 4. Prefabricated inlet scaled for a 78-in (1981-mm) inlet pipe.

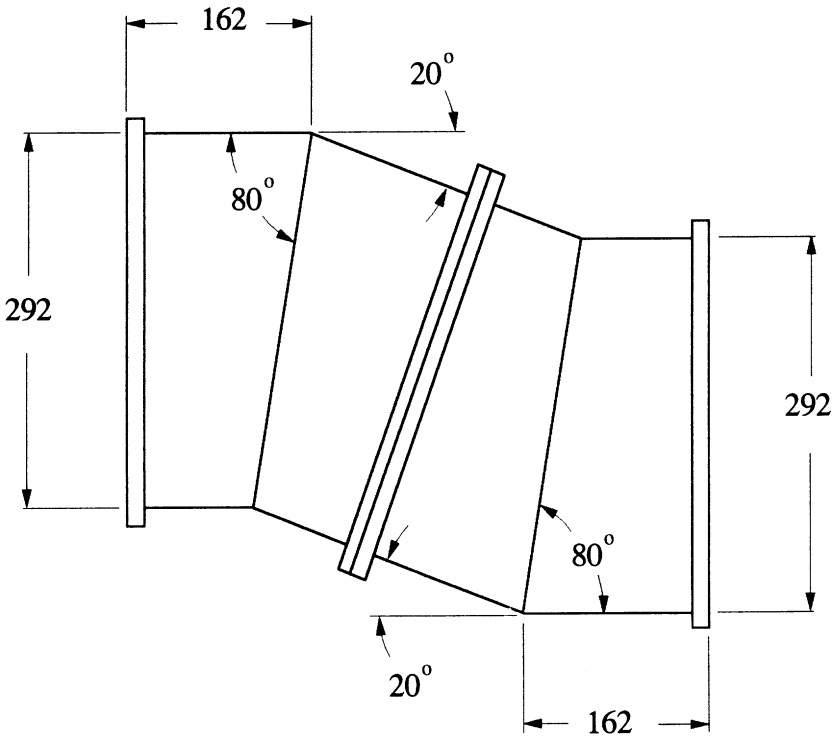

Note: All dimensions are in mm.

Figure 5. 20-degree elbow.

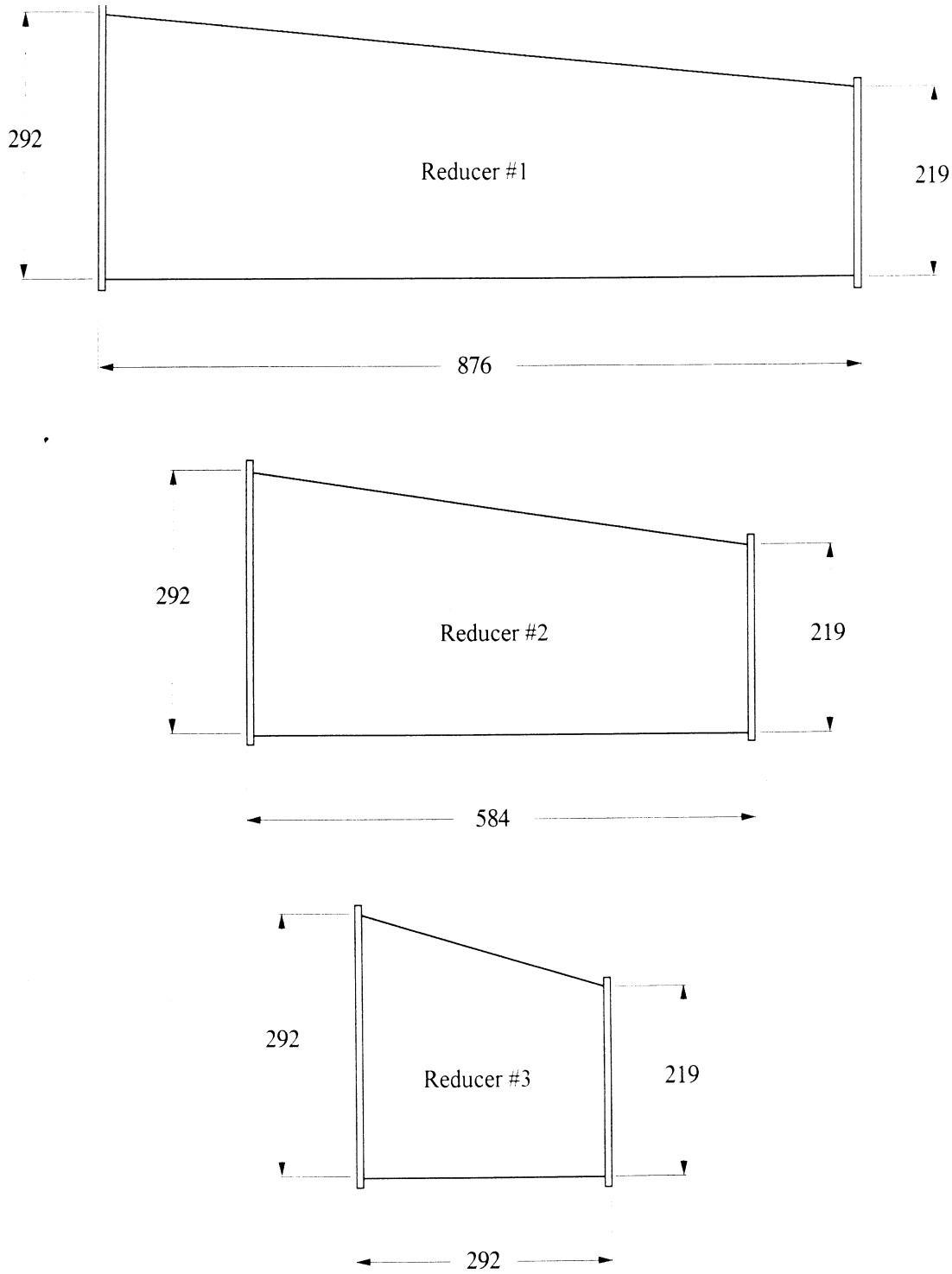

Note: All dimensions are in mm.

Figure 6. Reducers used for runs 10-14, scaled for 48-in (1219-mm) inlet pipe.

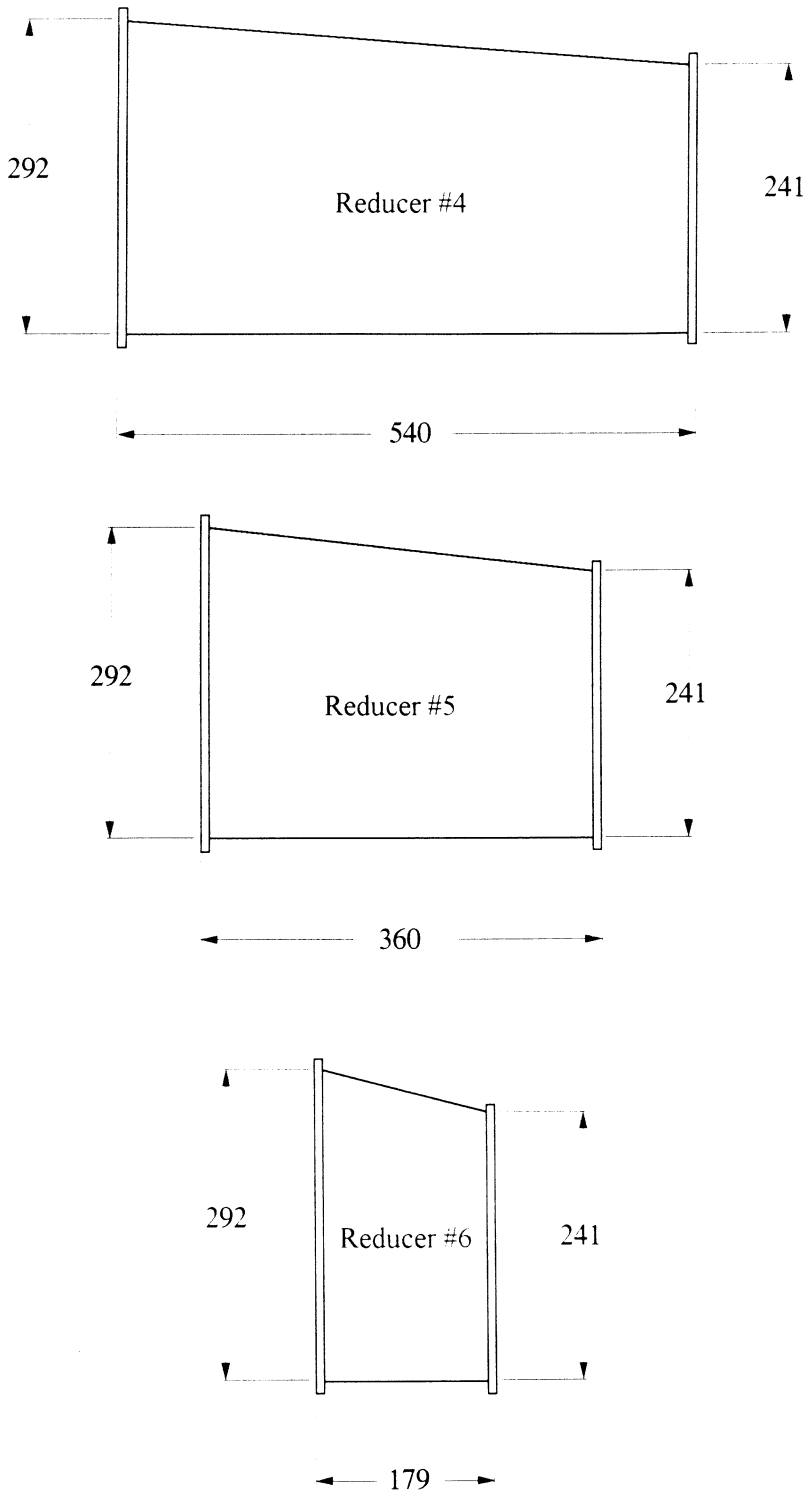

Note: All dimensions are in mm.

Figure 7. Reducers used for runs 1-5, scaled for 78-in (1981-mm) inlet.

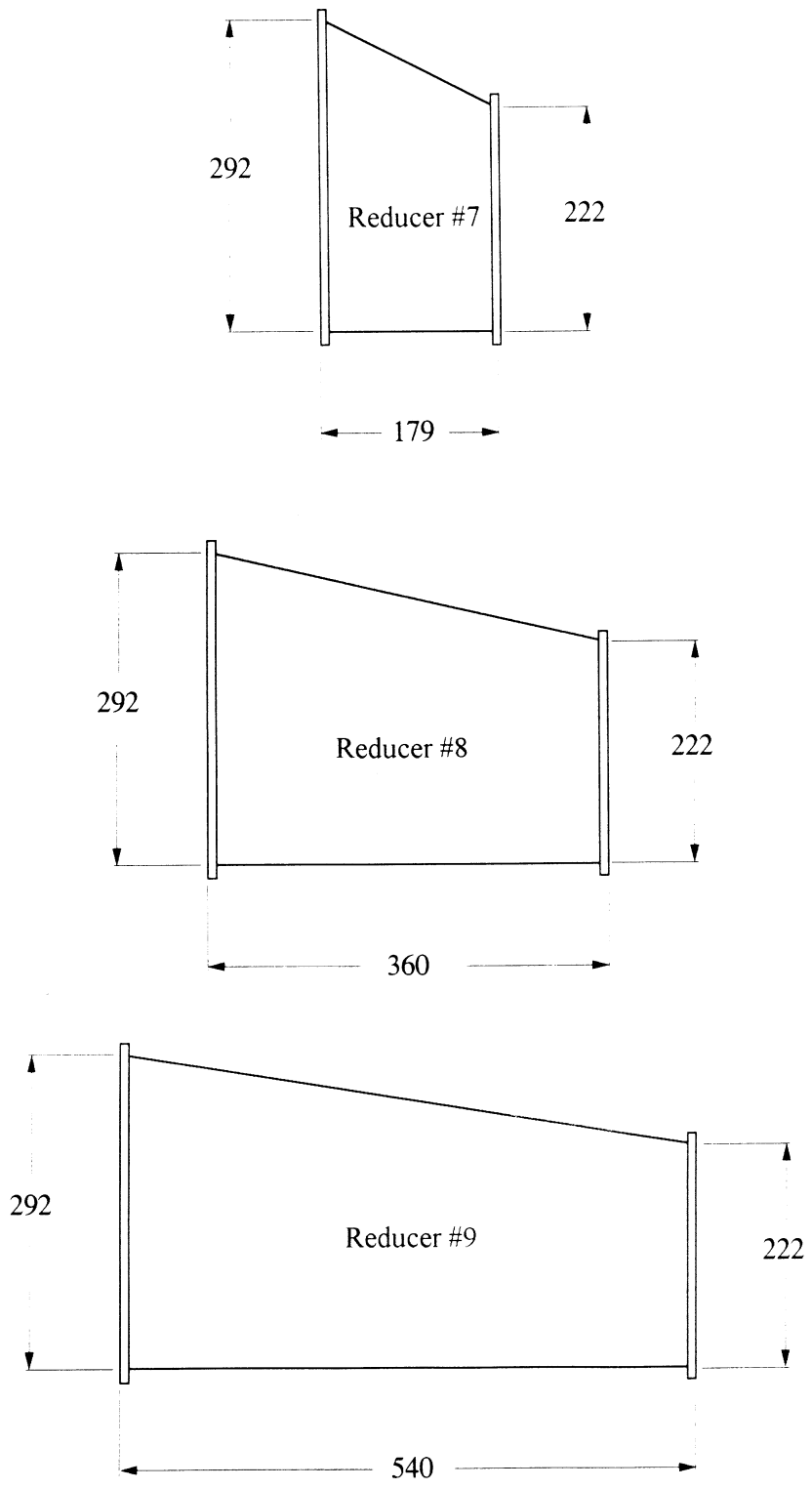

Figure 8. Reducers used for runs 6-8, scaled for 78-in (1981-mm) inlet.

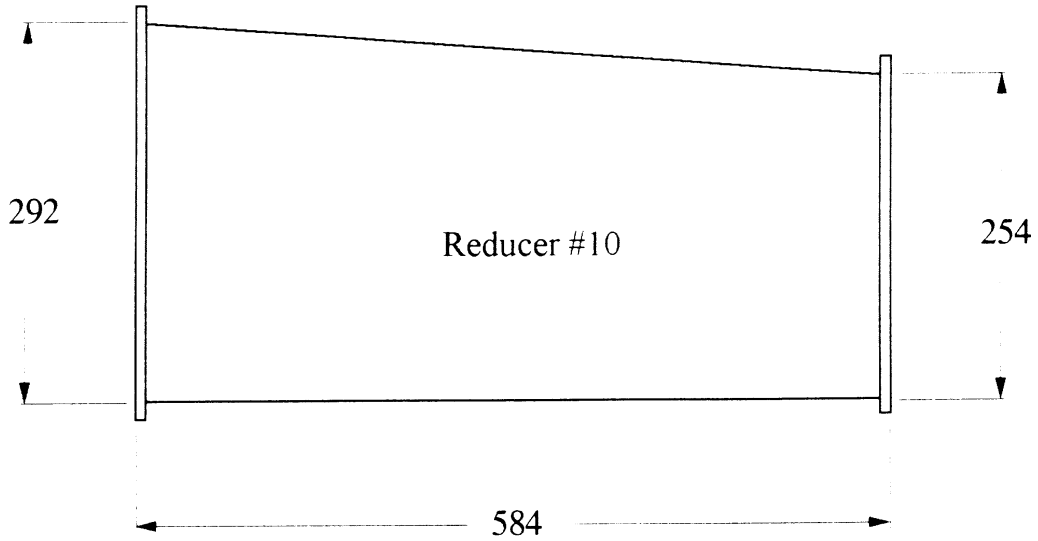

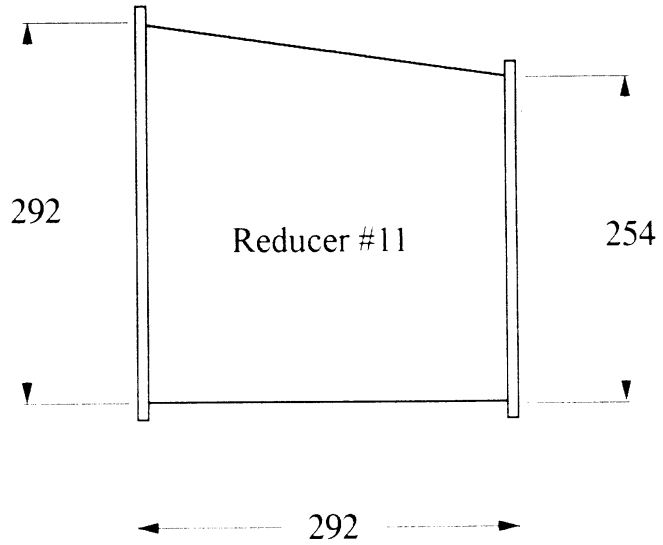

Note: All dimensions are in mm.

Figure 9. Reducers used for runs 15-17, scaled for 48-in (1219-mm) inlet.

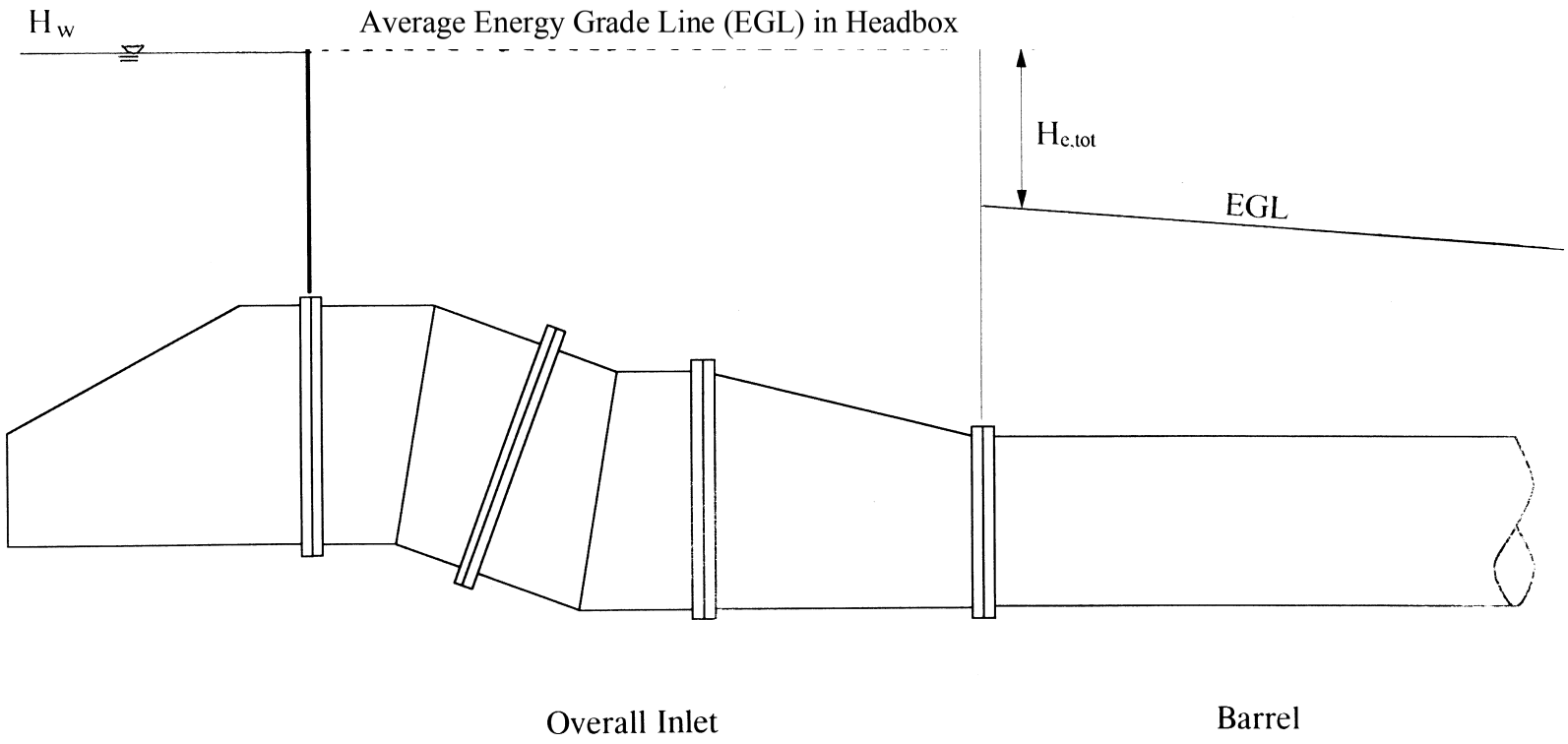

Figure 10. Calculation of $H_{e,tot}$ for outlet control

3. TEST MATRIX

The Iowa DOT guidelines, as shown in table 1, include the specifications for: (1) allowable diameter (D) reductions from the inlet pipe to the main barrel pipe and (2) minimum barrel slopes required to maintain supercritical flow at 0.8*D with an assumed Manning roughness coefficient (*n*) value of 0.012 for various design discharges. Iowa DOT also recommends a 4.0-ft (1.2-m) reducer length for each 6.0-in- (152.4-mm-) diameter reduction. Table 2 shows the test matrix that was set up to recommend modifications to the Iowa DOT guidelines for slope-tapered pipe culverts.

Table 1. Iowa DOT guidelines.

Approximate Q, ft^3/s	Diameter Reduction, inches		Minimum Barrel Slope, %	Equivalent Number of Reducers
	From	To		
350	84	72	0.8	2
350	84	66	1.1	3
295	78	66	1.0	2
295	78	60	1.3	3
245	72	60	1.0	2
245	72	54	1.6	3
200	66	54	1.2	2
200	66	48	2.0	3
160	60	54	0.9	1
160	60	48	1.5	2
125	54	48	1.0	1
125	54	42	1.7	2
96	48	42	1.2	1
96	48	36	2.0	2
71	42	36	1.3	1
50	36	30	1.6	1
33	30	24	2.0	1

1 in = 25.4 mm, 1 ft^3/s = 0.028 m^3/s

Note: Each reducer is 4.0 ft (1.2 m) in length. Therefore, three reducers would have a total length of 12.0 ft (3.6 m).

Table 2. Test matrix.

Test Series	Run No.	Q, (Discharge)		Diameter Reduction, inches		Barrel Slope, %	Reducers			
		Proto-type (ft^3/s)	Model (m^3/s)	From	To		#	Length, ft	Model No.	Model Length (m)
1	35 **2,26*** 3,27 4,28	245 **295** 340 380	0.058 **0.070** 0.080 0.090	78" prototype 11.5" model	66" prototype 9.5"** model	0.5 **1.0** 1.5 2.0	2	8	 5 5 5	0.360
2	5,29 1,25	**295**	**0.070**	78" prototype 11.5" model	66" prototype 9.5"** model	1.5	1 3	4 12	6 4	0.179 0.540
3	6,30 7,31 8,32	**295**	**0.070**	78" prototype 11.5" model	60" prototype 8.75"** model	2.0	1 2 3	4 8 12	7 8 9	0.179 0.360 0.540
4	bm1 bm2 bm5 bm6	**295**	**0.070**	78" prototype 11.5" model	78" prototype 11.5" model	3.5 5.0	-	-	-	-
5	10,20 **11,21** 12,22 13,23	70 **96** 115 175	0.056 **0.076** 0.091 0.139	48" prototype 11.5" model	36" prototype 8.625" model	1.0 **2.0** 2.8 3.5	2	8	2 2 2 2	0.584
6	9,19 14,24	**96**	**0.076**	48" prototype 11.5" model	36" prototype 8.625" model	2.0	1 3	4 12	1 3	0.292 0.876
7	17,34 15,33 16	**96**	**0.076**	48" prototype 11.5" model	42" prototype 10.0" model	2.0	1 2	4 8	11 10 10	0.292 0.584
8	bm3 bm4 bm7 bm8	**96**	**0.076**	48" prototype 11.5" model	48" prototype 11.5" model	3.5 5.0	-	-	-	-

1 in = 25.4 mm, 1 ft = 0.305 m, 1 ft^3/s = 0.028 m^3/s

Notes: * The entries in bold reflect the Iowa DOT recommended design conditions for the diameter reductions.
** The Barrel diameters are not exact model sizes, but are the closest plexiglass tube sizes that were available commercially. Exact models would have been 9.73 in (247.1 mm) for the 66-in barrel and 8.846 in for the 60-in (1676.4-mm) barrel.

Series 1 and 5 were intended to verify the minimum slope criteria and to determine how performance was affected by discharges other than the design discharges outlined in the Iowa DOT guidelines. Series 2, 3, and 6 were intended to check the reducer length criteria. Series 4 and 7 were benchmark tests for the precast inlet by itself (without the bends and reducers) and were intended to derive new design coefficients to replace the HDS-5 chart 1, scale 1 (chart 1/1) coefficients that had been used previously for lack of better guidelines.

Another series of tests was conducted to model the HDS-5 chart 1/1 inlet, which is described as square edge with headwall for a circular concrete culvert. This series was performed primarily as a verification of the test procedures to determine if it was possible to duplicate the HDS-5 results.

Prototype-to-model scaling ratios were selected that would maximize the pumping capability of 5.0 ft^3/s (0.14 m^3/s) and minimize model fabrication costs. Standard 12-in-(304.8-mm-) diameter acrylic tubing was used to model both the 78-in (1981-mm)and the 48-in (1219-mm) inlet diameters. The inside diameter of the plexiglass tubing was actually 11.5 in (292.01 mm), which resulted in length scaling ratios (L_r) of 6.783 for the 78-in (1981-mm) inlet and 4.174 for the 48-in (1981-mm) inlet. Using the dimensionless Froude number as a scaling parameter, the following scaling ratios can be derived:

L_r	=	$Length_{Prototype}/ Length_{Model}$	= 6.783 for the 78-in inlet = 4.174 for the 48-in inlet
W_r	=	wall thickness ratio	= L_r
Q_r	=	$Q_{prototype} /Q_{model}$	= $L_r^{2.5}$ = 119.8 for the 78-in inlet = 35.6 for the 48-in inlet
n_r	=	$n_{Prototype}/n_{Model}$	= $L_r^{1/6}$ = 1.38 for the 78-in inlet = 1.27 for the 48-in inlet

The 5.0-ft^3/s (0.14-m^3/s) pump was capable of modeling 175 ft^3/s (4.96 m^3/s) for the 48-in (1219-mm) inlet and 600 ft^3/s (16.99 m^3/s) for the 78-in (1981-mm) inlet. It was not feasible to model Manning's *n*, but it was measured for the model to document whether it was above or below the value assumed for the Iowa DOT guideline design table.

After the model was set up, it was relatively easy to run several discharges for each test series. Some of the slopes were deleted after it was determined when and where the shift from inlet control (presumed for the Iowa DOT guideline table) to outlet control occurred. In all, there were 18 runs where the culverts were operating under inlet control, 17 runs under outlet control, 8 benchmark runs for the precast inlets, and 4 runs for the special HDS-5 verification test.

The goals of the test matrix can be summarized as follows:

- Develop inlet control design coefficients for the Iowa DOT models.
- Develop inlet loss coefficients for the Iowa DOT models (to be used in outlet control analysis).
- Study the effect of reducer length and taper ratio (D_2/D_1).
- Compare the performance of the HDS-5 benchmark inlets versus the Iowa DOT models.

The data for all of the runs are presented in Appendix B.

4. CULVERT ANALYSIS AND RESULTS

Inlet Control

Current Iowa DOT practice is to use form 1 of the HDS-5 unsubmerged inlet control equations, which can be expressed as:

$$\frac{H_w}{D} = \frac{H_c}{D} + K_1\left[\frac{Q}{AD^{0.5}}\right]^{m_1} - 0.5S \qquad \text{(form 1 equation)}$$

Where:

H_w	=	headwater depth, m
D	=	culvert barrel height, m
H_c	=	specific energy at critical depth = $y_c + V_c^2 / 2g$, m
A	=	cross-sectional area of culvert barrel, m^2
Q	=	discharge, m^3/s.
K_1, m_1	=	design coefficients for the form 1 equation
S	=	design coefficients for the form 1 equation

The HDS-5 chart 1/1 design coefficients are based on the form 1 equation. The intention was to derive new design coefficients for the prefabricated inlet to improve the accuracy of the current design procedure. For many of the Iowa DOT tests, the measured H_w was nearly equal to the computed H_c value. The two terms tended to cancel each other out and as a result, the K_1 and m_1 terms were difficult to calculate. An attempt was made to estimate the average velocity in the headbox and to add a velocity head component to H_w, but it was not possible to consistently get positive differences between the H_w and H_c terms. The data suggest that the current Iowa procedure is conservative if any entrance loss is added to the computed specific head (H_c).

An alternative is to use the HDS-5 form 2 unsubmerged inlet control equation that incorporates H_c and the slope correction terms into the design coefficients. It is an easier form of the equation to use because there is no need to calculate H_c, which is a tedious calculation for circular culverts. The form 2 equation that was used to analyze the data can be written as:

$$\frac{H_w}{D} = K\left[\frac{Q}{AD^{0.5}}\right]^m \qquad \text{(form 2 equation)}$$

Where:

K, m = design coefficients for the form 2 equation.

For submerged inlet control flow, the following equation found in HDS-5 was used:

$$\frac{H_w}{D} = c\left[\frac{Q}{AD^{0.5}}\right]^2 + Y - 0.5S$$

Where

c, Y = design coefficients

At higher discharges, the barrel of the culvert would fill up or flow full. This indicated that the culvert was no longer flowing under inlet control conditions but under outlet control conditions. Therefore, it was very difficult to obtain enough data to accurately calculate the submerged inlet control design coefficients. Slopes of up to 5 percent were tested, and it was noted that whenever the H_w/D ratio neared 1.2, the culvert barrel often began flowing full. Consequently, it was difficult to obtain accurate *c* and *Y* values.

Regression results for the form 2 unsubmerged inlet control equation and for the submerged inlet control equation are summarized in table 3. The results for each of the individual runs are tabulated in tables 5, 6, and 7, which can be found on pages 21, 22, and 23, respectively.

Table 3. Inlet control design coefficients (English units).

Inlet Configuration	Unsubmerged		Submerged	
	K	m	c	Y
Iowa DOT slope-tapered inlet	0.477	0.533	0.025	0.6593
Iowa DOT prefabricated inlet	0.510	0.550	0.021	0.823
HDS-5 square edge w/headwall	0.574	0.543	0.038	0.734

Note that the HDS-5 inlet control equations are not dimensionless throughout. The coefficients, listed in table 3 above are directly comparable with the HDS-5 coefficients. English units must be used for the table 3 coefficients to apply. The current version of HDS-5 coefficients, are applicable only if English units are used. One remedy would be to include the acceleration of gravity in the discharge intensity term to make it dimensionless, but that would change all of the coefficients that have the acceleration of gravity built into them. The conversion of coefficients from one system to the other is as follows:

m	=	exponent is the same for either system of units (English or SI metric)
K	=	SI units = K (English units)*$(0.3048)^{m/2}$
c	=	SI units = c (English units)*(0.3048)
Y	=	constant is the same for either system of units

Outlet Control

When the culvert barrel begins to flow full, it is no longer just the inlet that exclusively governs the headwater depth. It is an accumulation of losses starting from the tailwater at the outlet, proceeding through the culvert barrel, and including the entrance losses at the inlet. Although a culvert flowing partially full could conceivably be in either inlet control or outlet control, a culvert flowing completely full throughout must be in outlet control. For many of the experiments involving the Iowa DOT slope-tapered inlets, the culvert barrel did fill up at the higher discharges, even when the barrel had a free outfall, i.e., no tailwater. Therefore, it was considered useful to document the entrance loss coefficients for outlet control as part of this study. For outlet control, the energy loss is expressed as a simple entrance loss coefficient (k_e) multiplied by the culvert (or pipe) barrel velocity head to determine the energy loss through the entrance. This coefficient is dimensionless, is independent of the system of units, and is usually taken to be constant for a particular inlet. The experimental values varied slightly, but the highest values measured were reported for design purposes. The procedures used to determine the k_e values are documented within this section.

The total entrance loss (H_{etot}) was measured for outlet control tests by projecting the energy grade line (EGL) in the headbox and the EGL for the culvert barrel to a common plane at the upstream end of the culvert barrel, as illustrated in figure 10. It was felt that there was enough overall length in the inlet to warrant rating the friction component separately from the minor losses attributed to the converging flows in the entrances, the flow direction changes in the bends, and the flow contraction in the reducer.

Then,

$$H_{etot} = H_{ef} + H_{ebr}$$

$$H_{ef} \left[\frac{n^2 V_{avg}{}^2 L}{R_{avg}{}^{4/3}} \right]_{reducer} + \left[\frac{n^2 V_{elb}{}^2 L}{R_{elb}{}^{4/3}} \right]_{elbow}$$

$$H_{ebr} = k_e \left[\frac{V_b{}^2}{2g} \right]$$

$$H_{ebr} = H_{etot\,(measured)} - H_{ef\,(calculated)}$$

Where:

H_{ef}	=	friction losses in the reducer and elbow configuration, m
H_{ebr}	=	minor losses, other than friction, for the overall inlet, m
k_e	=	outlet control, entrance loss coefficient
n	=	Manning's roughness coefficient, which was determined to be approximately 0.010 for the plexiglass pipes used in the experiments
V_{avg}	=	velocity in the reducer, m/s
V_{elb}	=	velocity in the elbow, m/s
V_b	=	velocity in the culvert barrel, m/s
R_{avg}	=	hydraulic radius for the reducer, m
R_{elb}	=	hydraulic radius for the elbow, m

The important thing to note is that the k_e value reported does not include friction in the overall inlet, which could be more than 20 ft (6.1 m) long in the full-scale installation. For a circular pipe flowing full, R = D/4.

Manning's n can be backcalculated by measuring the friction slope in the main culvert barrel for several full-flow tests and substituting it into the formula:

$$n = \frac{R^{2/3} S_f{}^{1/2}}{V}$$

Where:

S_f	=	friction slope, which can be measured by the slope of the EGL, m

The calculated n values averaged 0.010, which is a reasonable value for the plexiglass piping. It was not possible to do the same for the reducers, which were fabricated from sheet metal, but it was assumed that the roughness of the metal was close enough to the plexiglass to use the 0.010 value throughout.

Table 4. Outlet control design coefficients.

Inlet Configuration	k_e
Iowa DOT slope-tapered inlet = 0.477	0.20
Iowa DOT prefabricated inlet = 27.2	0.35
HDS-5 square edge w/headwall = 0.574	0.50

Figures 11 and 12 compare the unsubmerged and the submerged laboratory data for the Iowa DOT prefabricated inlet, the square-edge headwall inlet, and the HDS-5 chart 1/1 coefficients. The laboratory results for the square-edge headwall correspond well with the HDS-5 coefficients. The figures also show that the Iowa DOT prefabricated inlet is more efficient than the other two inlets. The results for each of the individual runs are shown in tables 5, 6, and 7, which can be found on pages 21 through 23, respectively.

5. DISCUSSION OF RESULTS

The design coefficients and k_e values listed in tables 3 and 4 would allow one to design the Iowa slope-tapered pipe culverts for a full range of discharges. Figures 11 and 12 show that the prefabricated inlet is more efficient than the HDS-5 chart 1/1 inlet. Iowa DOT had been using the HDS-5 inlet to represent both the unsubmerged and the submerged inlet control conditions. These figures also verify that the test procedures used in this study are consistent with previous research done for HDS-5.

Figures 13 through 16 show whether there is any advantage to using multiple reducer lengths to go from a large-diameter pipe to a smaller one. Figure 13 shows that there is no discernable advantage to using more than one reducer length for the 48-in- to 36-in- (1219-mm- to 914-mm-) diameter reduction at the design discharge, which was modeled using 0.076 m^3/s. The Iowa DOT guideline is for two reducer lengths. Figure 14 shows some improvement by using two reducer lengths, but no additional improvement by using three reducer lengths for the 78-in- to 60-in- (1981-mm- to 1524-mm-) diameter reduction at the design discharge, which was modeled at 0.070 m^3/s. Current Iowa DOT guidelines call for three reducer lengths at this discharge. Figure 15 seems to show a slight improvement by using two reducer lengths. However, the figure shows that there is no improvement by using three reducer lengths for the 78-in- to 66-in- (1981-mm- to 1676-mm-) diameter reduction. The Iowa DOT guideline is two reducer lengths. Figure 16 shows no improvement by using two reducer lengths rather than one for the 48-in- to 42-in- (1219-mm- to 1067-mm-) diameter reduction. The Iowa DOT guideline is for one reducer. Based on these observations, it appears that the number of reducers recommended by Iowa DOT is slightly conservative, usually by one reducer.

6. CONCLUSIONS

Iowa DOT should use form 2 of the unsubmerged inlet control design equations found in HDS-5. Examination of the procedures for calculating H_c showed them to be valid. However, for slope-tapered inlets, form 2 of the unsubmerged inlet control equations works better.

The taper ratio and the number of reducers do not seem to affect the energy losses through the slope-tapered inlets, nor do they seem to affect the transition between inlet control and outlet control for smaller culvert slopes. Tables 5, 6, and 7 summarize the design and entrance loss coefficients. Note that the friction losses must be calculated and added to the H_e values to yield the total head losses for each inlet.

Table 5. Summary of inlet control design coefficients.

Pipe Diameter = 9.5 inches

	Reducer #6 7.0625 inches	Reducer #5 14.1875 inches	Reducer #4 21.25 inches
0.50% slope			
1.00% slope		K = 0.479 m = 0.549	
1.50% slope	K = 0.477 m = 0.539	K = 0.487 m = 0.524	K = 0.506 m = 0.499
2.00% slope		K = 0.458 m = 0.557	

Pipe Diameter = 8.75 inches

	Reducer #7 7.0625 inches	Reducer #8 14.1875 inches	Reducer #9 21.25 inches
0.50% slope			
1.00% slope			
1.50% slope			
2.00% slope	K = 0.480 m = 0.527	K = 0.488 m = 0.525	K = 0.461 m = 0.556

Pipe Diameter = 8.625 inches

	Reducer #3 11.5 inches	Reducer #2 23.0 inches	Reducer #1 34.5 inches
1.00% slope		K = 0.460 m = 0.531	
2.00% slope		K = 0.475 m = 0.506	
2.80% slope	K = 0.479 m = 0.521	K = 0.470 m = 0.538	K = 0.480 m = 0.531
3.50% slope		K = 0.474 m = 0.529	

Pipe Diameter = 10.0 inches

	Reducer #11 11.5 inches	Reducer #10 23.0 inches
1.00% slope		
2.00% slope	K = 0.482 m = 0.529	K = 0.481 m = 0.535
2.80% slope		
3.50% slope		

Table 6. Summary of outlet control entrance loss coefficients (without friction losses).

Pipe Diameter = 9.5 inches

	Reducer #6 7.0625 inches	Reducer #5 14.1875 inches	Reducer #4 21.25 inches
0.50% slope			
1.00% slope		He = 6.44 Ke = 0.12	
1.50% slope	He = 14.69 Ke = 0.13	He = 9.92 Ke = 0.12	He = 13.66 Ke = 0.12
2.00% slope		He = 10.49 Ke = 0.12	

Pipe Diameter = 8.75 inches

	Reducer #7 7.0625 inches	Reducer #8 14.1875 inches	Reducer #9 21.25 inches
0.50% slope			
1.00% slope			
1.50% slope			
2.00% slope	He = 20.33 Ke = 0.15	He = 31.52 Ke = 0.16	He = 21.00 Ke = 0.15

Pipe Diameter = 8.625 inches

	Reducer #3 11.5 inches	Reducer #2 23.0 inches	Reducer #1 34.5 inches
1.00% slope		He = 19.05 Ke = 0.13	
2.00% slope		He = 19.37 Ke = 0.14	
2.80% slope	He = 21.04 Ke = 0.13	He = 20.09 Ke = 0.14	He = 19.76 Ke = 0.13
3.50% slope		He = 20.36 Ke = 0.14	

Pipe Diameter = 10.0 inches

	Reducer #11 11.5 inches	Reducer #10 23.0 inches
1.00% slope		
2.00% slope	He = 20.19 Ke = 0.23	He = 8.76 Ke = 0.22
2.80% slope		
3.50% slope		

Table 7. Summary of coefficients for Iowa prefabricated inlet and square-edge inlet with headwall.

Inlet Control

	Prefab Inlet #12	Prefab Inlet #13	Square-edge with Headwall
3.50% slope	K = 0.510 m = 0.560	K = 0.490 m = 0.560	K = 0.574 m = 0.543
5.00% slope	K = 0.540 m = 0.520	K = 0.500 m = 0.560	

Outlet Control

	Prefab Inlet #12	Prefab Inlet #13	Square-edge with Headwall
3.50% slope	He = 30.0 Ke = 0.38	He = 26.0 Ke = 0.33	He = 44.6 Ke = 0.56
5.00% slope	He = 28.5 Ke = 0.36	He = 24.4 Ke = 0.31	

7. ADDITIONAL STUDIES

The following is a list of future studies that Iowa DOT may wish to consider that could address outstanding technical issues:

- Test the slope-tapered inlets without the reducers in order to isolate the head losses associated with just the reducers.
- Test additional slopes for the inlet control runs. The culvert barrel was often filling up when H_w/D neared 1.2. Submerged inlet coefficients could be calculated with the additional data.
- Perform more detailed inlet control tests that determine exactly where the flow translates from inlet control to outlet control. The effect of the number of reducers can also be examined to see if it has any effect on where the transition from inlet control to outlet control occurs.

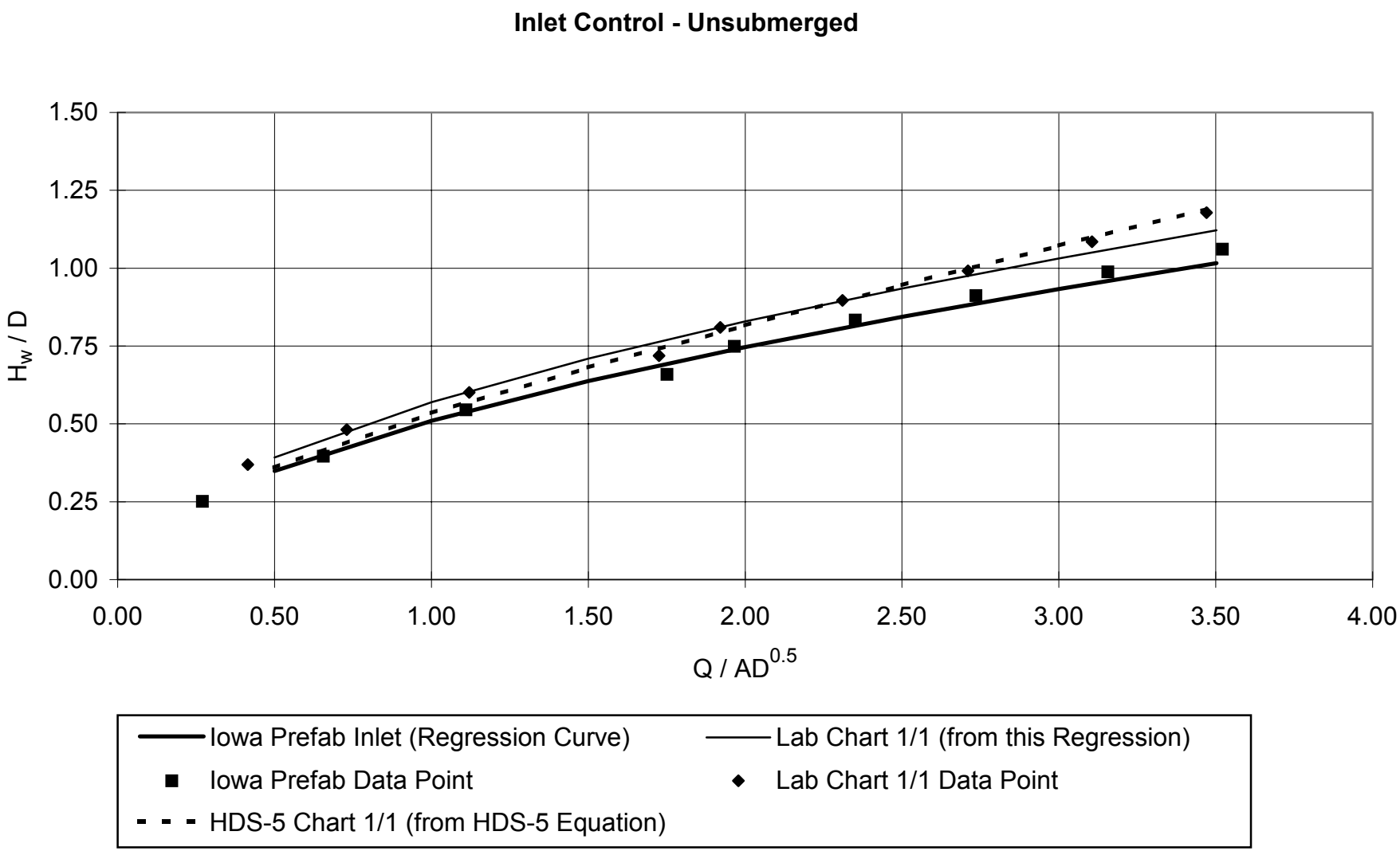

Figure 11. Comparison plot of the three unsubmerged benchmark inlets.

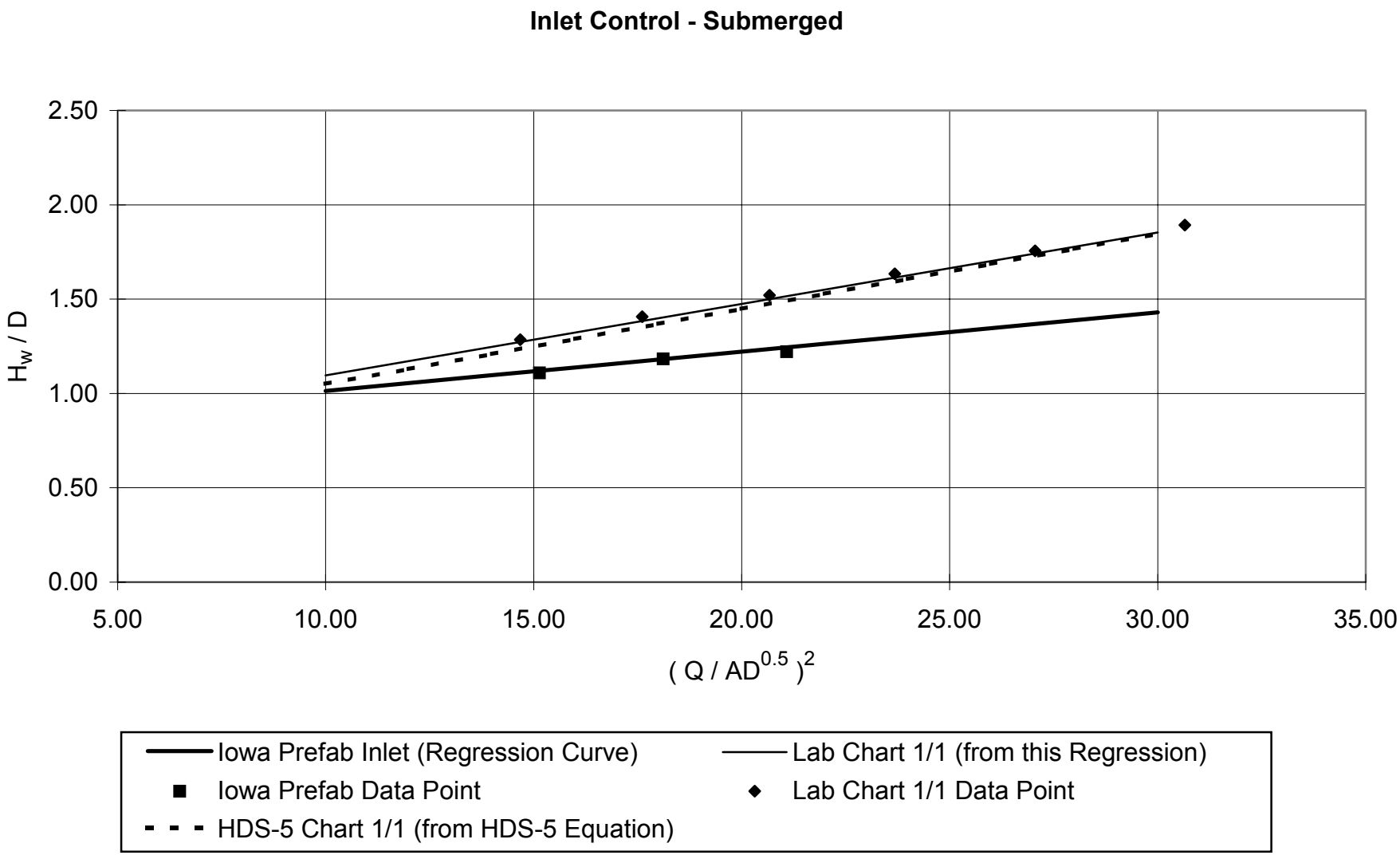

Figure 12. Comparison plot of the submerged benchmark inlets.

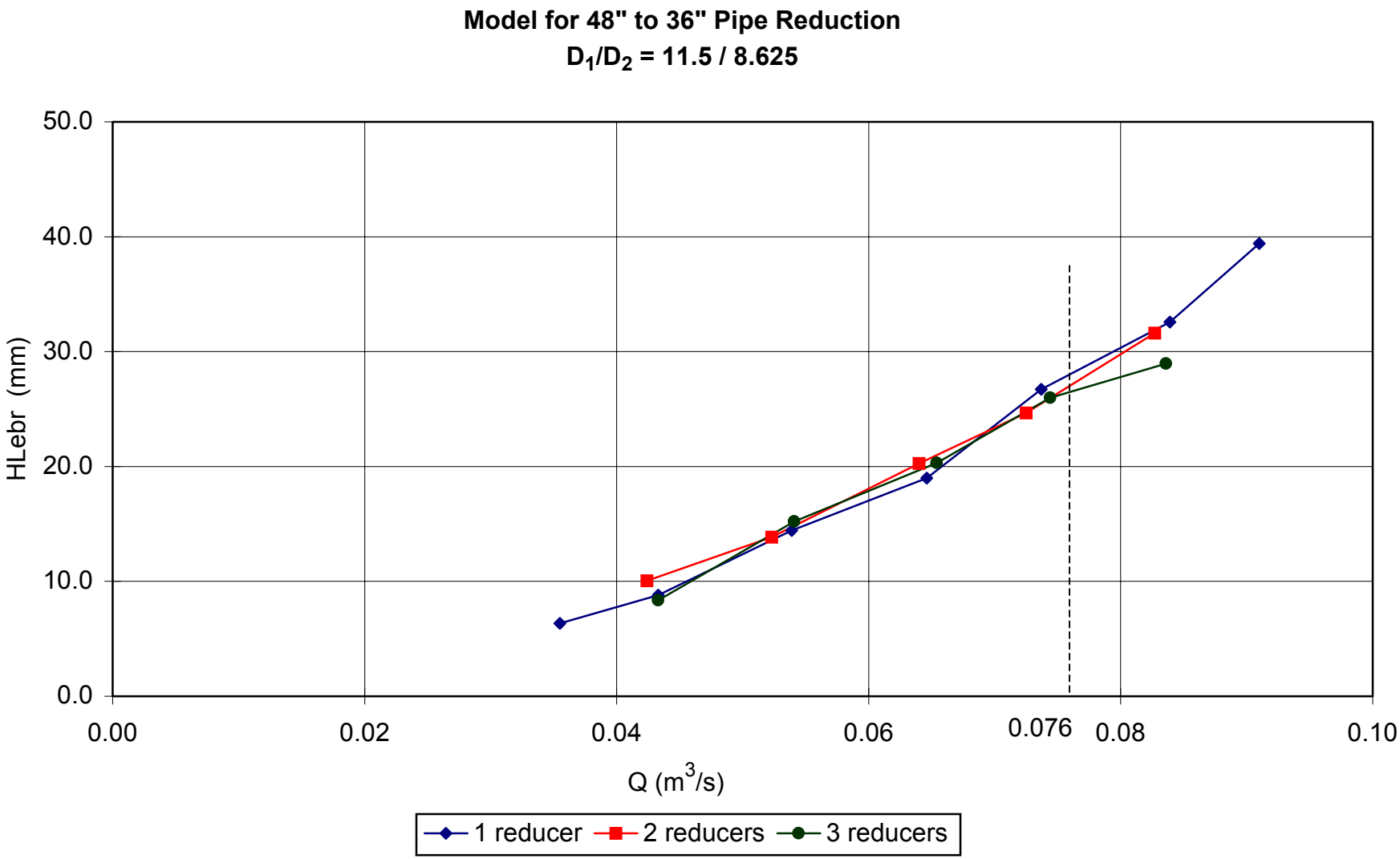

1 in = 25.4 mm

Figure 13. Reducer length effect for D_1/D_2 = 11.5 / 8.625.

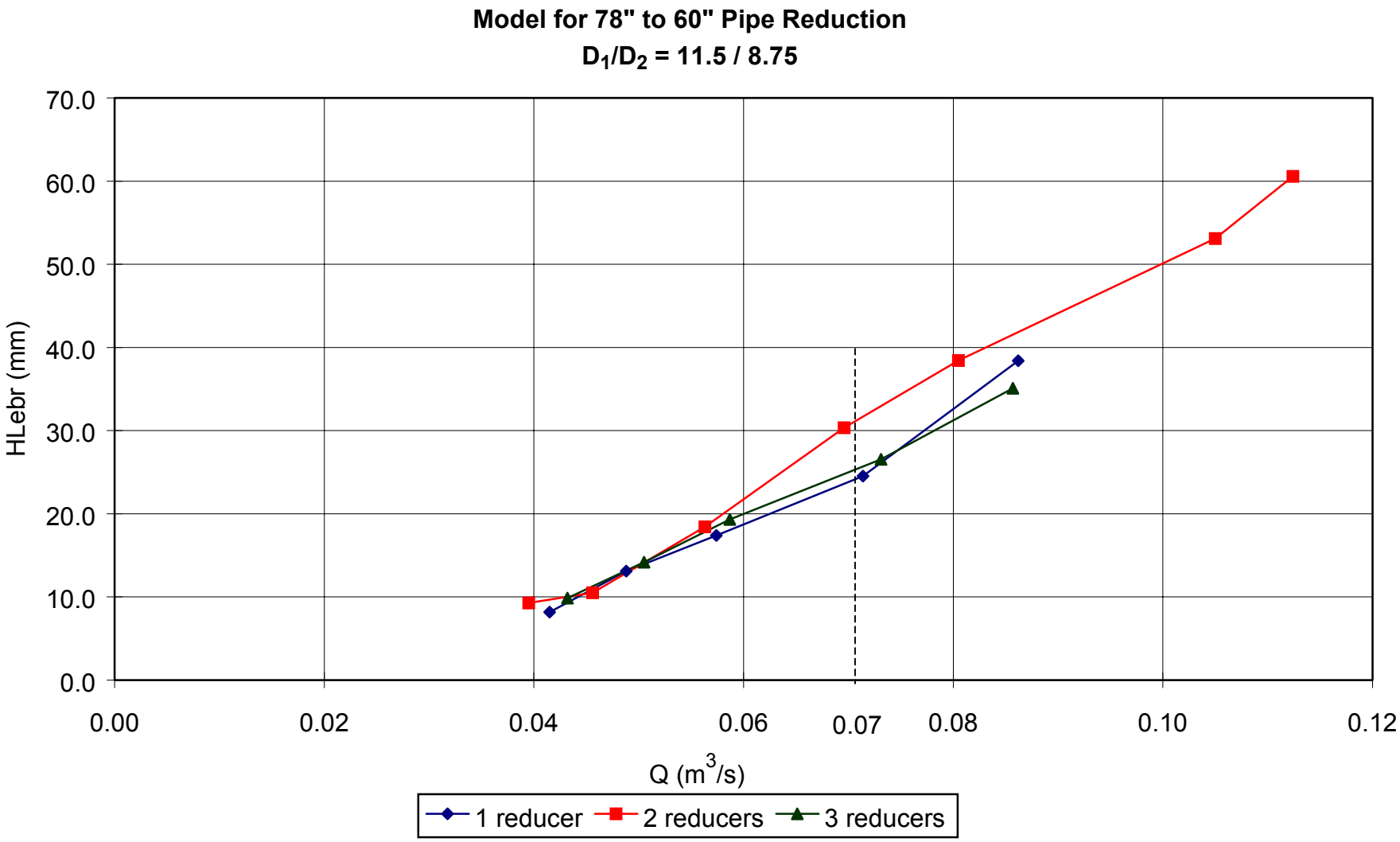

1 in = 25.4 mm

Figure 14. Reducer length effect for D_1/D_2 = 11.5 / 8.75.

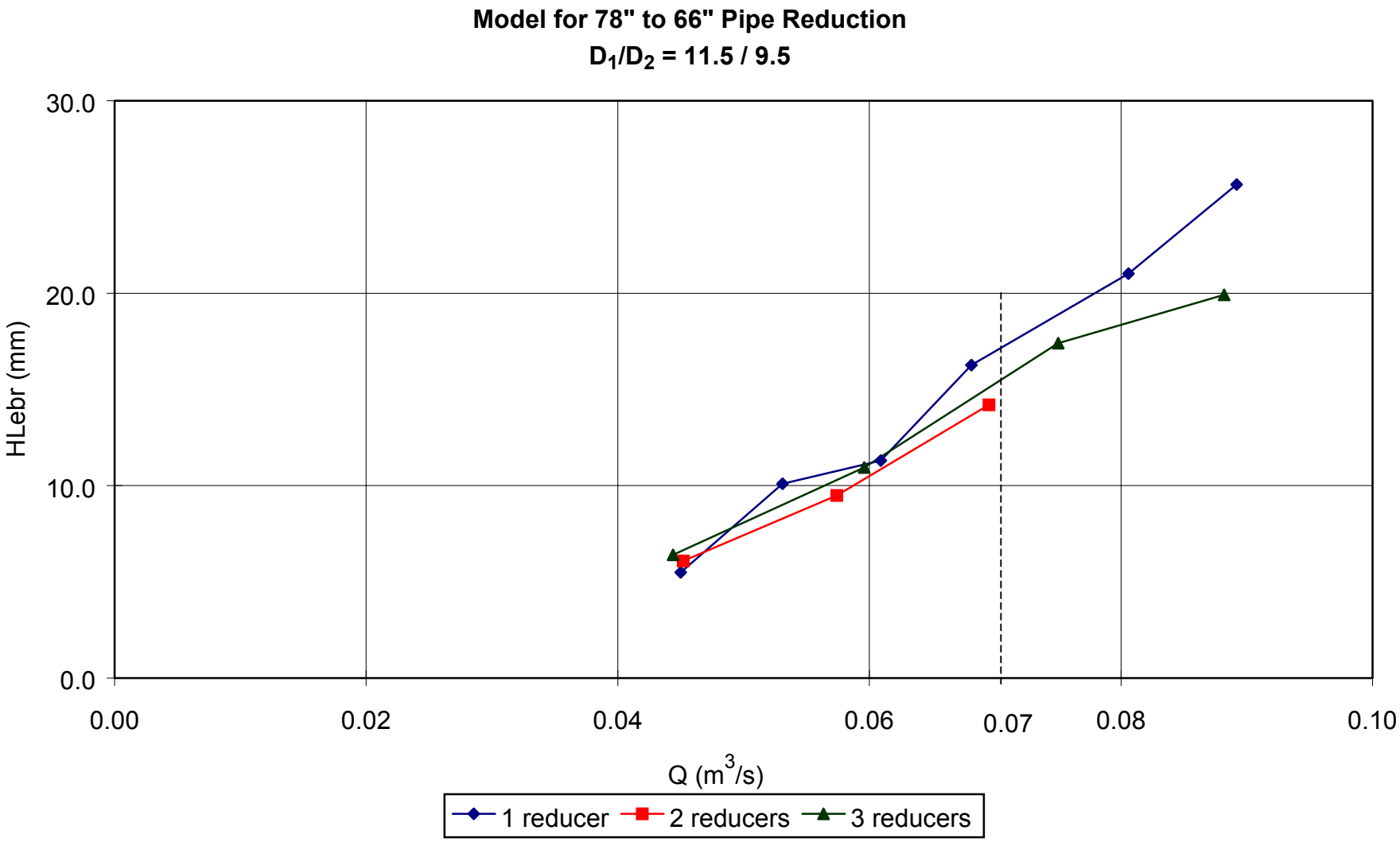

1 in = 25.4 mm

Figure 15. Reducer length effect for D_1/D_2 = 11.5 / 9.5.

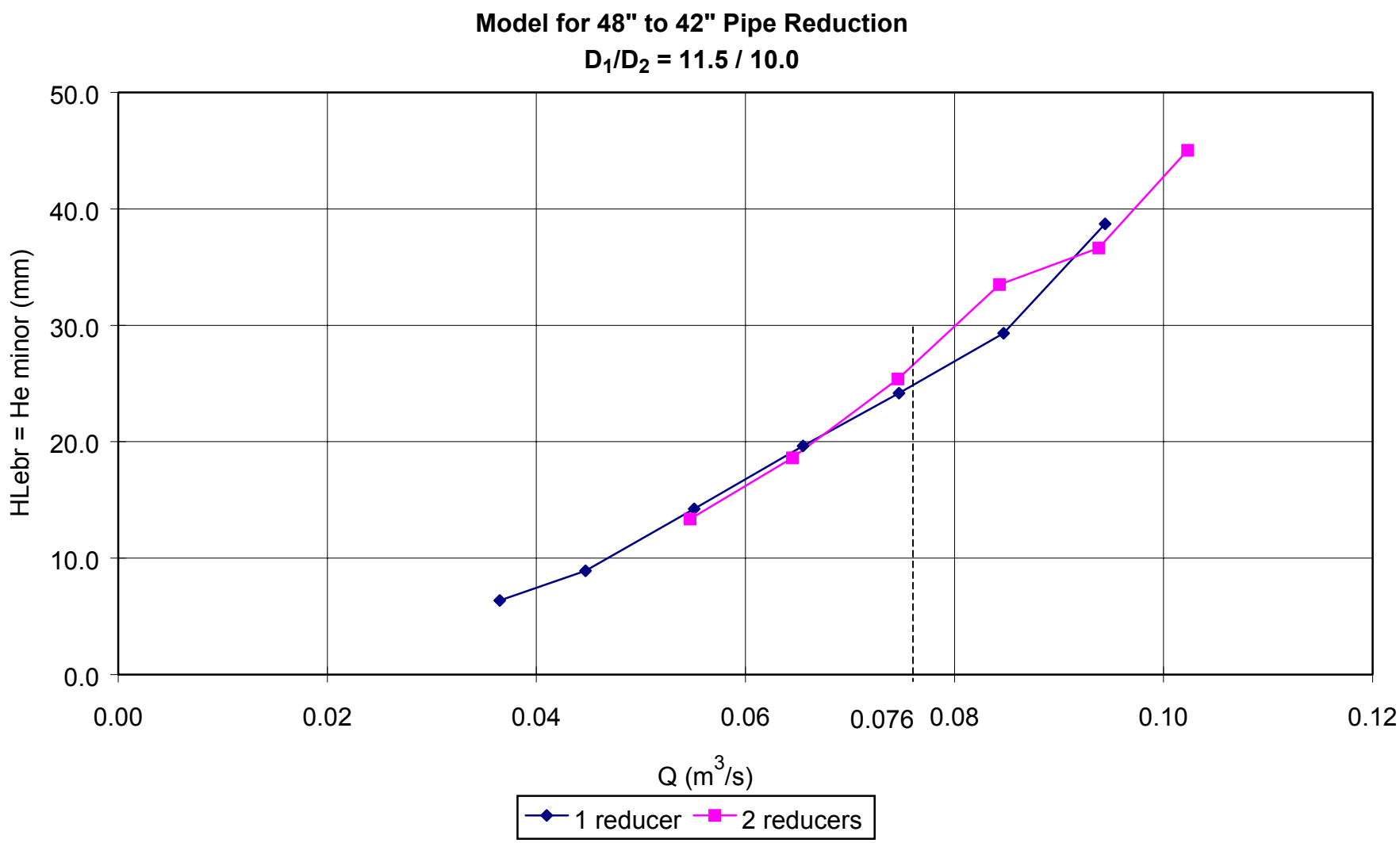

1 in = 25.4 mm

Figure 16. Reducer length effect for D_1/D_2 = 11.5 / 10.0.

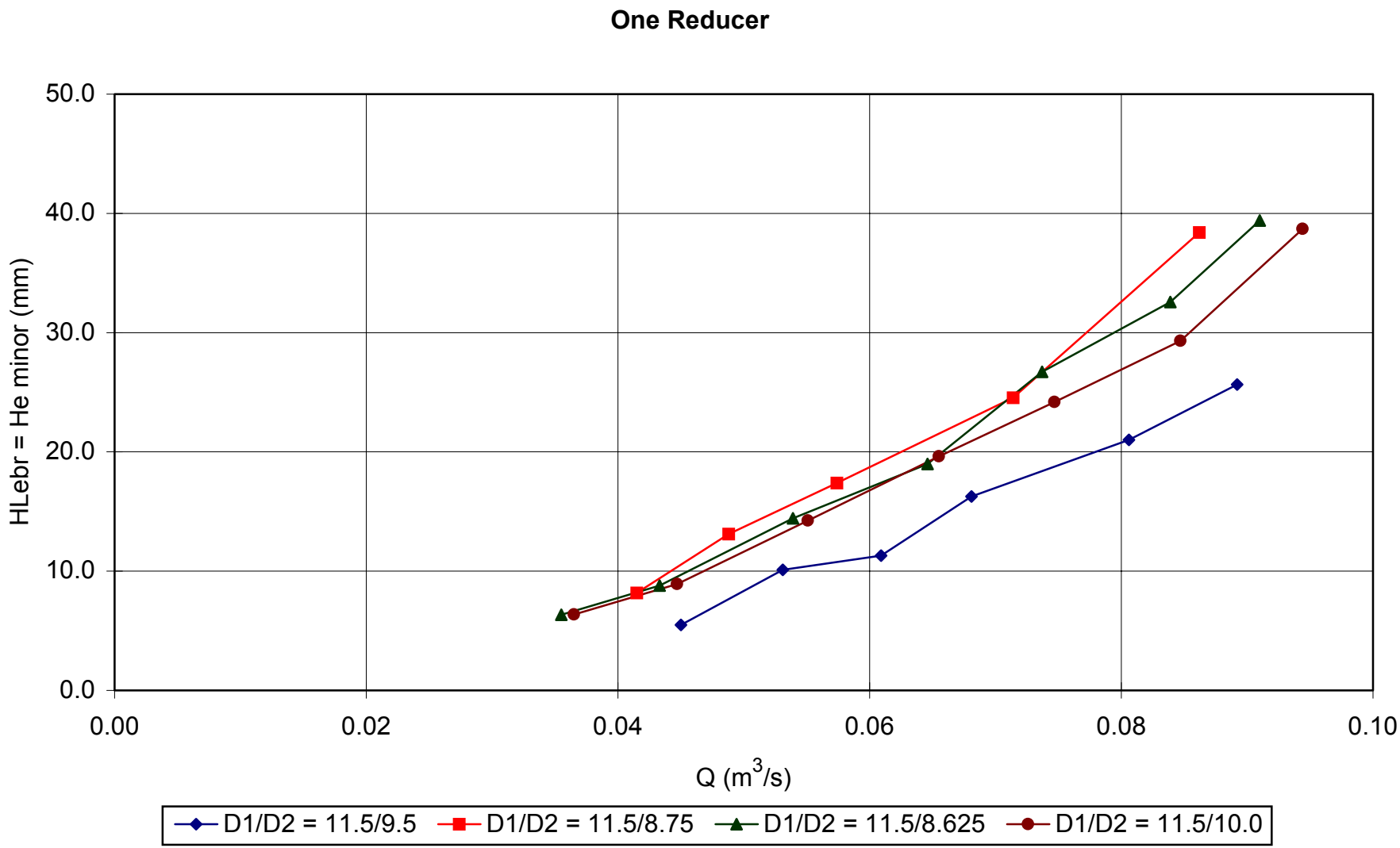

Figure 17. Diameter reduction effect – One reducer.

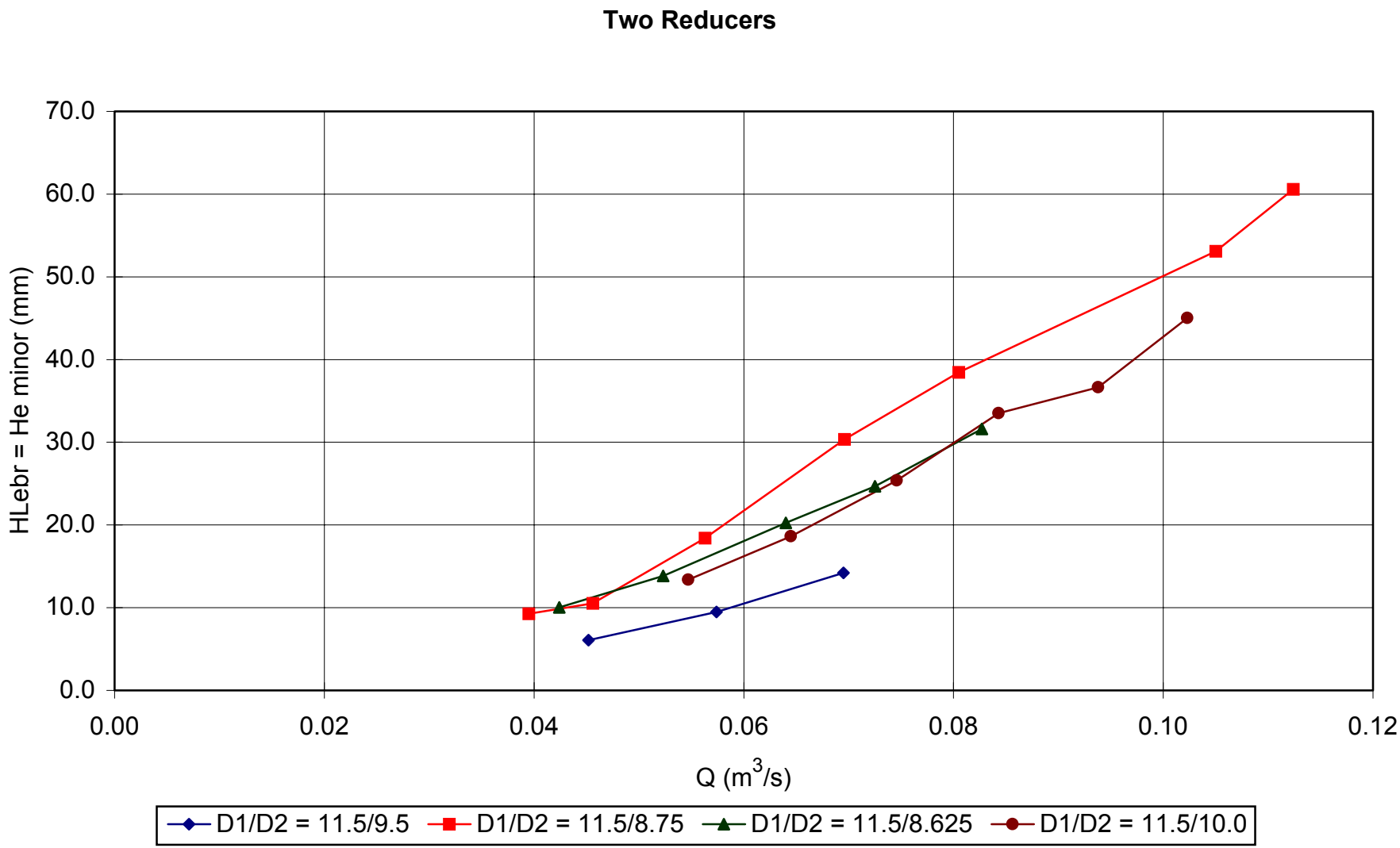

Figure 18. Diameter reduction effect – Two reducers.

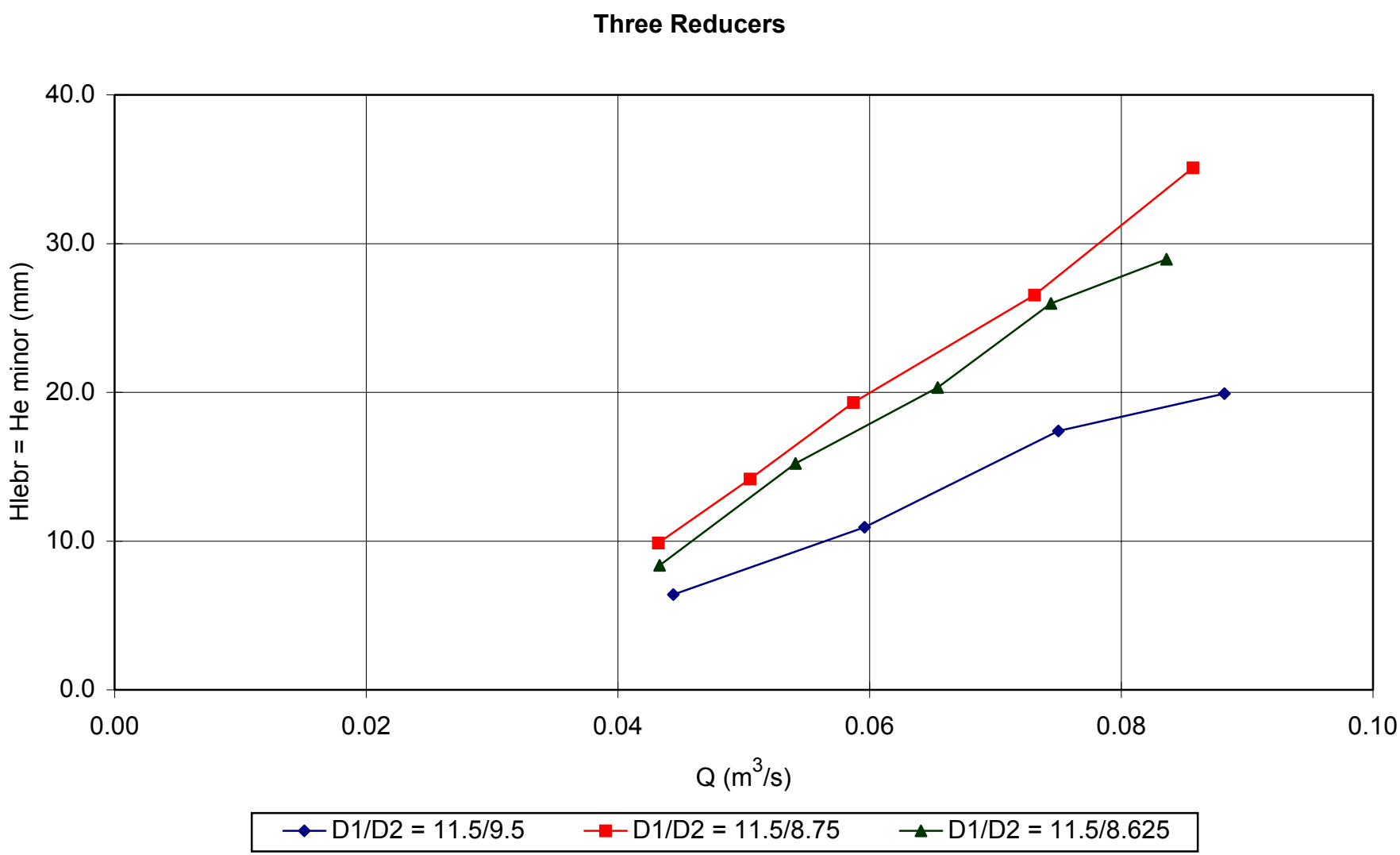

Figure 19. Diameter reduction effect – Three reducers.

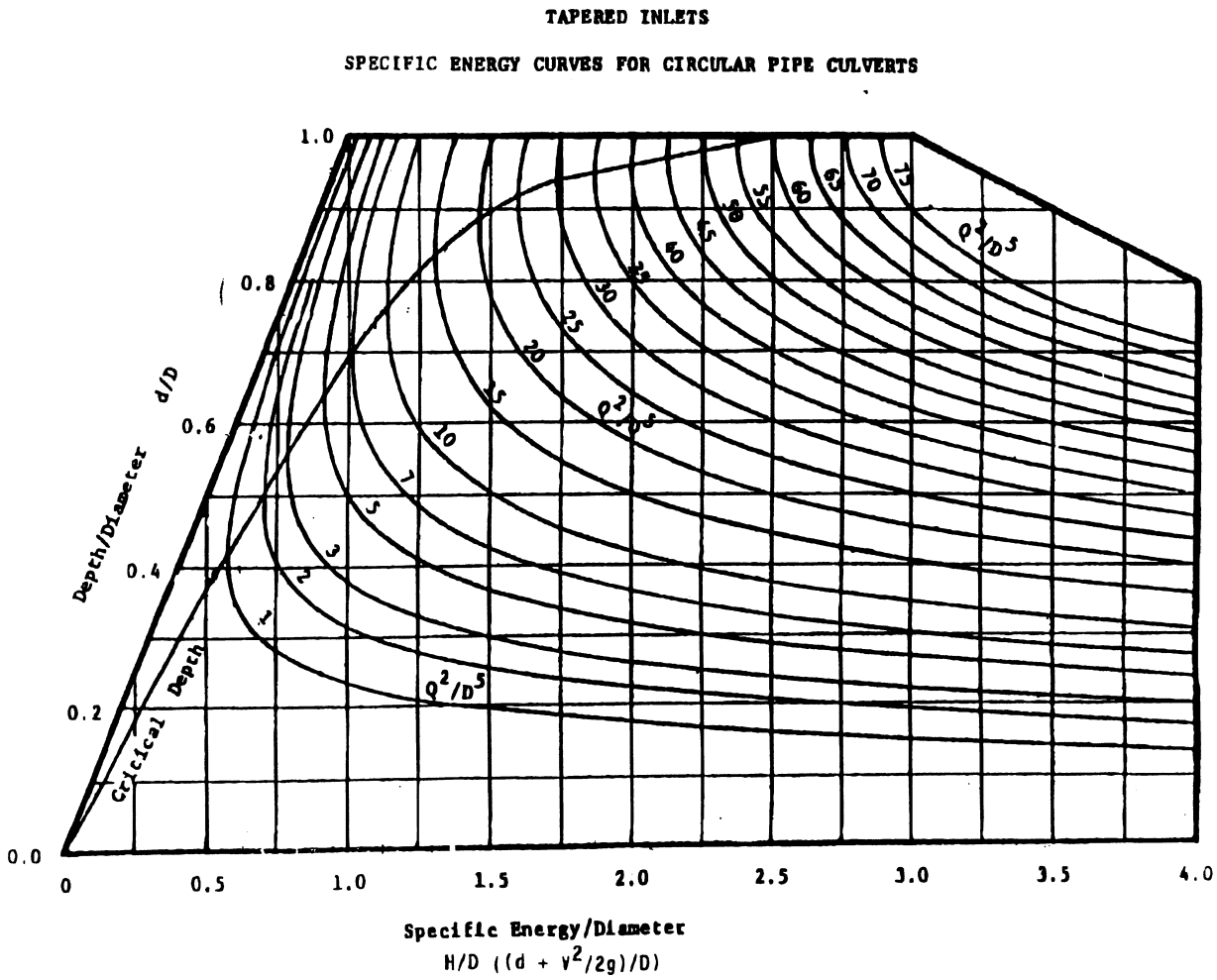

Figure 20. Iowa DOT nomograph for calculating specific head.

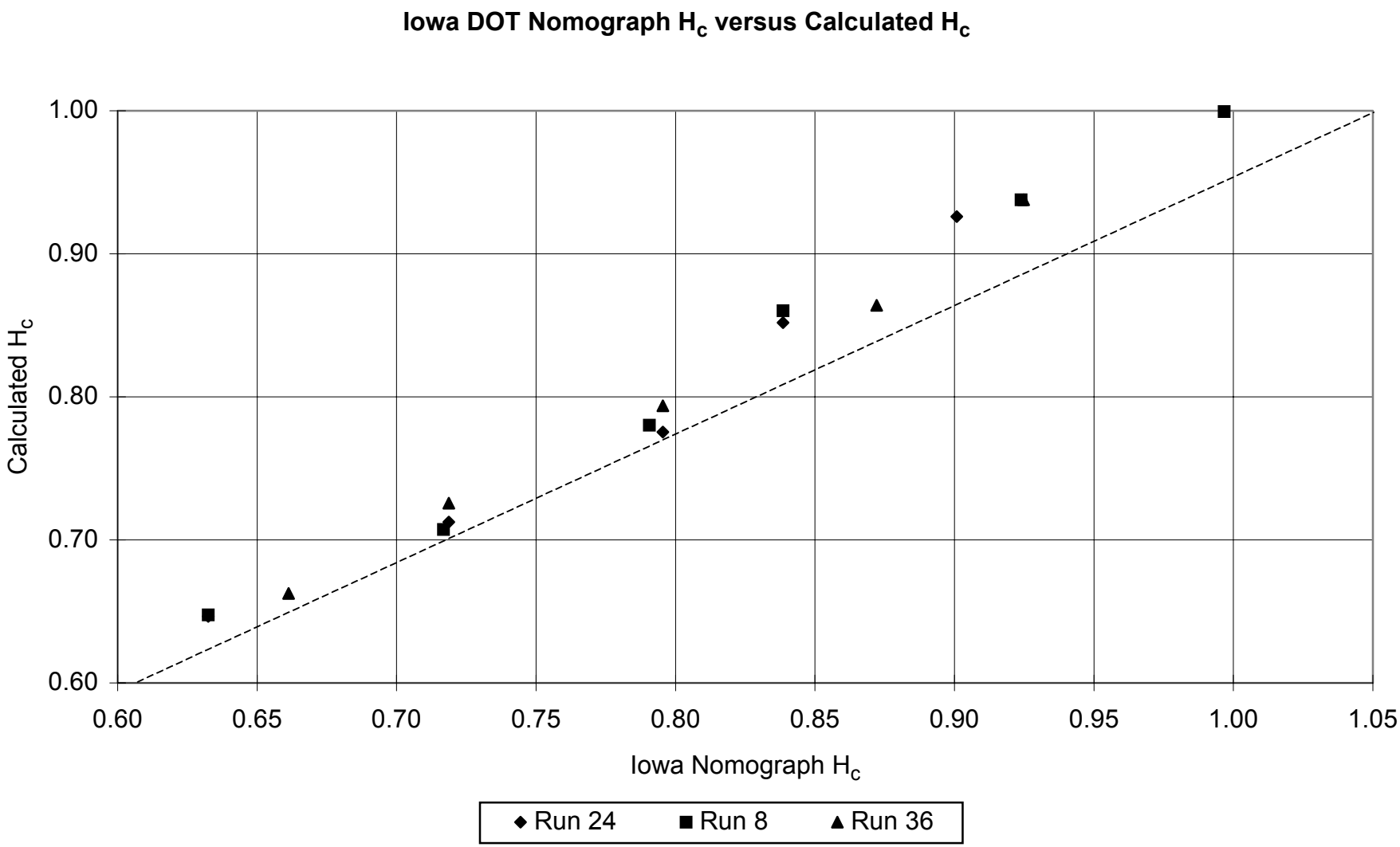

Figure 21. Comparison plot of Iowa DOT nomograph H_c versus calculated H_c..

APPENDIX A.

CALCULATING SPECIFIC HEAD AT CRITICAL DEPTH

Form 1 of the inlet control equations found in HDS-5 includes the specific head at critical depth, which is defined as:

$$H_c = y_c + \frac{V_c^2}{2g} \tag{1}$$

Where:

H_c	=	specific head at critical depth, m
y_c	=	critical depth, m
V_c	=	critical velocity, m/s
g	=	gravity, m/s^2

Critical velocity is calculated by applying the continuity equation over the cross-sectional area of the barrel. For rectangular cross-sections, the area is simply the depth times the width. However, for pipes flowing partially full, the calculations for cross-sectional area are more complicated. Figure 22 shows the parameters involved with such a calculation. The method for calculating the cross-sectional area in a partially full pipe is accomplished using the following geometric relationships:

$$A_F = \frac{1}{2} r^2 (\theta - \sin\theta) \tag{2}$$

$$\theta = 2\ Arc\cos\left[1 - \frac{y_c}{r}\right] \tag{3}$$

$$T = 2r\ \sin\frac{\theta}{2} \tag{4}$$

$$y_m = \frac{A_F}{T} \tag{5}$$

Where:

A_F	=	partially full flow area, m^2
r	=	pipe radius, m
2	=	angle (see figure 22), radians
T	=	top width, m
y_m	=	hydraulic mean depth, m

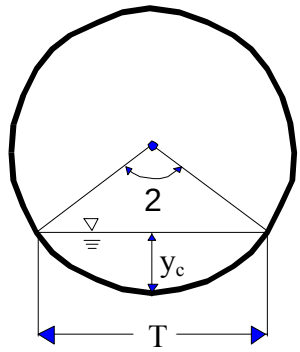

Figure 22. Geometric parameters for pipes flowing partially full.

At critical depth, the Froude number (F_r) is equal to 1:

$$F_r = \frac{V_c}{\sqrt{g y_m}} = 1 \qquad \textbf{(6)}$$

By substitution:

$$\frac{\frac{Q}{A_F}}{\sqrt{g \frac{A_F}{T}}} = 1 \qquad \textbf{(7)}$$

Rearranging yields:

$$\frac{A_F}{T_{1/3}} = \frac{Q^{2/3}}{g_{1/3}} \qquad \textbf{(8)}$$

Substituting equations 2 and 4 for A_F and T yields:

$$\frac{\theta - \sin\theta}{\left[\sin\frac{\theta}{2}\right]^{1/3}} = 0.79\frac{Q^{2/3}}{r^{5/3}} \qquad \textbf{(9)}$$

With the above relationships established, a relatively simple procedure can be used to compute H_c for any given flow rate Q:

1. Plug Q and r into equation 9 and solve for θ. This can be accomplished by trial and error or by a direct solution using a computer program or a programmable calculator.

2. Solve for y_c using equation 3.

3. Solve for A_F using equation 2.

4. Calculate H_c using equation 1 and substituting Q/A_F for V_c.

APPENDIX B.

LABORATORY DATA

Date: 8/11/1997
Run#: 1
Reducer Number: 4 Inlet No. 12

Barrel Slope: 1.5 percent
Inlet Diameter: 11.5 inches

Culvert Barrel Diameter: 9.5 inches
Barrel Cross Sectional Area: 0.72131 ft^2
Calculated Barrel Diameter: (11.5 inches = 0.95833 ft)
Barrel Length: 12 feet

Unsubmerged Inlet Control Design Constants

Form (1)
K = 1.0000
M = 0.0000

Form (2)
K = 0.506
M = 0.499

Submerged Inlet Control Design Constants

c = 0.0000
Y = 0.0000

Definitions:

H_W = Headwater depth above inlet control section invert, ft
D = Interior height of culvert barrel, ft
H_C = Specific head at critical depth ($d + V^2/2g$), ft
Q = Discharge, ft^3/s
A = Full cross sectional area of culvert barrel, ft^2
S = Culvert barrel slope, ft/ft
K,M = Constants

Notes:

1). For mitered inlets use +0.7S instead of -0.5S as the slope correction factor
2). For Unsubmerged Flow, $H_W/D<1.2$
3). For Submerged Flow, $H_W/D>1.5$
4). For Unsubmerged Flow, $Q/AD^{0.5}<3.5$
5). For Submerged Flow, $Q/AD^{0.5}$-4.0

												Unsubmerged					Submerged	
												Form 1 Data			Form 2 Data			
												Y	X		Y	X	Y	X
												$\ln(H_w/D-H_c/D+0.5S)$						
Reading Number	H_w (mm)	H_w (ft)	D (ft)	Q (ft^3/s)	Q (m^3/s)	A (ft^2)	S (ft/ft)	H_c (ft)	$Q/(AD^{0.5})$	H_w/D	H_c/D	$H_w/D-H_c/D+0.5S$		$\ln(Q/(AD^{0.5}))$	$\ln(H_w/D)$	$\ln(Q/(AD^{0.5}))$	$H_w/D+0.5S$	$(Q/(AD^{0.5}))^2$
0	0.0	0.0000	0.9583	0.0000	0.0000	0.72131	0.0150	0.0000	0.0000	0.0000	0.0000							
1	108.6	0.3564	0.9583	0.3637	0.0103	0.72131	0.0150	0.3416	0.5151	0.3719	0.3565	0.0229	-3.7751	-0.6633	-0.9891	-0.6633		
2	154.3	0.5062	0.9583	0.8087	0.0229	0.72131	0.0150	0.5232	1.1453	0.5282	0.5459	-0.0102	#NUM!	0.1356	-0.6382	0.1356		
3	182.2	0.5979	0.9583	1.1724	0.0332	0.72131	0.0150	0.6422	1.6604	0.6239	0.6701	-0.0387	#NUM!	0.5071	-0.4718	0.5071		
4	206.6	0.6779	0.9583	1.3561	0.0384	0.72131	0.0150	0.6971	1.9205	0.7074	0.7274	-0.0125	#NUM!	0.6526	-0.3462	0.6526		
5	229.9	0.7543	0.9583	1.6669	0.0472	0.72131	0.0150	0.7851	2.3606	0.7871	0.8192	-0.0247	#NUM!	0.8589	-0.2395	0.8589		
6	265.9	0.8725	0.9583	2.2072	0.0625	0.72131	0.0150	0.9287	3.1258	0.9104	0.9691	-0.0512	#NUM!	1.1397	-0.0939	1.1397		
7	310.2	1.0178	0.9583	2.7334	0.0774	0.72131	0.0150		3.8709	1.0621							1.0696	14.9842
8	352.8	1.1576	0.9583	3.1995	0.0906	0.72131	0.0150		4.5311	1.2079							1.2154	20.5309
9*	382.6	1.2554	0.9583	3.6975	0.1047	0.72131	0.0150		5.2363	1.3099							1.3174	27.4186

* barrel was full at this point.

Form (1)

K = 1.0000

M = 0.0000

Form (2)

K = 0.479

M = 0.549

Submerged Inlet Control Design Constants

c = 0.020

Y = 0.772

Definitions:

H_W = Headwater depth above inlet control section invert, ft

D = Interior height of culvert barrel, ft

H_C = Specific head at critical depth ($d + V^2/2g$), ft

Q = Discharge, ft^3/s

A = Full cross sectional area of culvert barrel, ft^2

S = Culvert barrel slope, ft/ft

K,M = Constants

Notes:

1). For mitered inlets use +0.7S instead of -0.5S as the slope correction factor

2). For Unsubmerged Flow, $H_W/D<1.2$

3). For Submerged Flow, $H_W/D>1.5$

4). For Unsubmerged Flow, $Q/AD^{0.5}$ <3.5

5). For Submerged Flow, $Q/AD^{0.5}$ -4.0

												Unsubmerged					Submerged	
												Form 1 Data			Form 2 Data			
												Y	X		Y	X	Y	X
												$\ln(H_w/D-H_c/D+0.5S)$						
Reading Number	H_w (mm)	H_w (ft)	D (ft)	Q (ft^3/s)	Q (m^3/s)	A (ft^2)	S (ft/ft)	H_c (ft)	$Q/(AD^{0.5})$	H_w/D	H_c/D	$H_w/D-H_c/D+0.5S$		$\ln(Q/(AD^{0.5}))$	$\ln(H_w/D)$	$\ln(Q/(AD^{0.5}))$	$H_w/D+0.5S$	$(Q/(AD^{0.5}))^2$
0	0.0	0.0000	0.9583	0.0000	0.0000	0.72131	0.0100	0.0000	0.0000	0.0000	0.0000							
1	108.0	0.3543	0.9583	0.4202	0.0119	0.72131	0.0100	0.3686	0.5951	0.3697	0.3846	-0.0099	#NUM!	-0.5190	-0.9950	-0.5190		
2	149.2	0.4895	0.9583	0.8087	0.0229	0.72131	0.0100	0.5232	1.1453	0.5108	0.5459	-0.0302	#NUM!	0.1356	-0.6718	0.1356		
3	178.3	0.5851	0.9583	1.2148	0.0344	0.72131	0.0100	0.6551	1.7204	0.6105	0.6836	-0.0680	#NUM!	0.5426	-0.4934	0.5426		
4	204.9	0.6724	0.9583	1.4197	0.0402	0.72131	0.0100	0.7156	2.0105	0.7016	0.7467	-0.0401	#NUM!	0.6984	-0.3544	0.6984		
5	225.6	0.7402	0.9583	1.6880	0.0478	0.72131	0.0100	0.7909	2.3906	0.7723	0.8253	-0.0479	#NUM!	0.8715	-0.2583	0.8715		
6	250.5	0.8219	0.9583	2.0306	0.0575	0.72131	0.0100	0.8827	2.8757	0.8576	0.9211	-0.0585	#NUM!	1.0563	-0.1536	1.0563		
7	265.2	0.8702	0.9583	2.2213	0.0629	0.72131	0.0100	0.9324	3.1458	0.9080	0.9729	-0.0599	#NUM!	1.1461	-0.0965	1.1461		
8	284.6	0.9338	0.9583	2.4791	0.0702	0.72131	0.0100	0.9986	3.5108	0.9744	1.0420	-0.0625	#NUM!	1.2559	-0.0259	1.2559		
9	313.2	1.0276	0.9583	2.8287	0.0801	0.72131	0.0100		4.0060	1.0722							1.0772	16.0477
10	344.0	1.1286	0.9583	3.1465	0.0891	0.72131	0.0100		4.4561	1.1777							1.1827	19.8566
11	368.2	1.2079	0.9583	3.4397	0.0974	0.72131	0.0100		4.8712	1.2604							1.2654	23.7283
12	383.0	1.2566	0.9583	3.6975	0.1047	0.72131	0.0100		5.2363	1.3112							1.3162	27.4184
13	402.4	1.3201	0.9583	3.9235	0.1111	0.72131	0.0100		5.5563	1.3775							1.3825	30.8729
14*	448.1	1.4701	0.9583	4.1459	0.1174	0.72131	0.0100		5.8714	1.5341							1.5391	34.4735

* barrel was full at this point

Date: 7/31/1997
Run#: 3
Reducer Number: 5 Inlet No. 12

Barrel Slope: 1.5 percent
Inlet Diameter: 11.5 inches

Culvert Barrel Diameter: 9.5 inches
Barrel Cross Sectional Area: 0.72131 ft^2
Calculated Barrel Diameter: (11.5 inches = 0.95833 ft)
Barrel Length: 12 feet

Unsubmerged Inlet Control Design Constants

Form (1)
K = 1.0000
M = 0.0000

Form (2)
K = 0.487
M = 0.524

Submerged Inlet Control Design Constants

c = 0.0000
Y = 0.0000

Definitions:

H_W = Headwater depth above inlet control sction invert, ft
D = Interior height of culvert barrel, ft
H_c = Specific head at critical depth ($d + V^2/2g$), ft
Q = Discharge, ft^3/s
A = Full cross sectional area of culvert barrel, ft^2
S = Culvert barrel slope, ft/ft
K,M = Constants

Notes:

1). For mitered inlets use +0.7S instead of -0.5S as the slope correction factor
2). For Unsubmerged Flow, $H_W/D<1.2$
3). For Submerged Flow, $H_W/D>1.5$
4). For Unsubmerged Flow, $Q/AD^{0.5}<3.5$
5). For Submerged Flow, $Q/AD^{0.5}$-4.0

													Unsubmerged					
													Form 1 Data		Form 2 Data		Y	X
													Y	X	Y	X		
													$\ln(H_w/D-H_c/D+0.5S)$				**$H_w/D+0.5S$**	**$(Q/(AD^{0.5}))^2$**
Reading Number	**H_w** (mm)	**H_w** (ft)	**D** (ft)	**Q** (ft^3/s)	**Q** (m^3/s)	**A** (ft^2)	**S** (ft/ft)	**H_c** (ft)	**$Q/(AD^{0.5})$**	**H_w/D**	**H_c/D**	**$H_w/D-H_c/D+0.5S$**		**$\ln(Q/(AD^{0.5}))$**	**$\ln(H_w/D)$**	**$\ln(Q/(AD^{0.5}))$**		
0	0.0	0.0000	0.9583	0.0000	0.0000	0.72131	0.0150	0.0000	0.0000	0.0000	0.0000							
1	98.2	0.3221	0.9583	0.3284	0.0093	0.72131	0.0150	0.3238	0.4651	0.3361	0.3379	0.0057	-5.1696	-0.7655	-1.0904	-0.7655		
2	145.5	0.4773	0.9583	0.7487	0.0212	0.72131	0.0150	0.5017	1.0603	0.4980	0.5236	-0.0180	#NUM!	0.0585	-0.6971	0.0585		
3	176.3	0.5785	0.9583	1.1972	0.0339	0.72131	0.0150	0.6497	1.6954	0.6037	0.6780	-0.0668	#NUM!	0.5279	-0.5047	0.5279		
4	201.4	0.6608	0.9583	1.4055	0.0398	0.72131	0.0150	0.7115	1.9905	0.6895	0.7424	-0.0454	#NUM!	0.6884	-0.3718	0.6884		
5	225.8	0.7408	0.9583	1.6951	0.0480	0.72131	0.0150	0.7928	2.4006	0.7730	0.8273	-0.0468	#NUM!	0.8757	-0.2574	0.8757		
6	249.4	0.8182	0.9583	2.0235	0.0573	0.72131	0.0150	0.8808	2.8657	0.8538	0.9191	-0.0578	#NUM!	1.0528	-0.1580	1.0528		
7	266.2	0.8735	0.9583	2.2566	0.0639	0.72131	0.0150	0.9415	3.1958	0.9114	0.9824	-0.0635	#NUM!	1.1618	-0.0927	1.1618		
8	281.9	0.9250	0.9583	2.4791	0.0702	0.72131	0.0150	0.9986	3.5108	0.9652	1.0420	-0.0693	#NUM!	1.2559	-0.0354	1.2559		
																	1.0780	16.1682
9	312.7	1.0259	0.9583	2.8393	0.0804	0.72131	0.0150		4.0210	1.0705							1.1638	19.8120
10	337.8	1.1082	0.9583	3.1430	0.0890	0.72131	0.0150		4.4511	1.1563								
																	1.28389	27.52326
11*	372.8	1.2232	0.9583	3.7045	0.1049	0.72131	0.0150		5.24626	1.27639							1.36856	31.88136
12*	397.6	1.3044	0.9583	3.9870	0.1129	0.72131	0.0150		5.64636	1.36106								

* barrel was full at this point

Date: 8/5/1997
Run#: 4
Reducer Number: 5 Inlet No. 12

Barrel Slope: 2.0 percent
Inlet Diameter: 11.5 inches

Culvert Barrel Diameter: 9.5 inches
Barrel Cross Sectional Area: 0.72131 ft^2
Calculated Barrel Diameter: (11.5 inches = 0.95833 ft)
Barrel Length: 12 feet

Unsubmerged Inlet Control Design Constants

Form (1)
K = 1.0000
M = 0.0000

Form (2)
K = 0.458
M = 0.557

Submerged Inlet Control Design Constants

c = 0.031
Y = 0.566

Definitions:

H_W = Headwater depth above inlet control section invert, ft
D = Interior height of culvert barrel, ft
H_C = Specific head at critical depth ($d + V^2/2g$), ft
Q = Discharge, ft^3/s
A = Full cross sectional area of culvert barrel, ft^2
S = Culvert barrel slope, ft/ft
K,M = Constants

Notes:

1). For mitered inlets use +0.7S instead of -0.5S as the slope correction factor
2). For Unsubmerged Flow, $H_W/D<1.2$
3). For Submerged Flow, $H_W/D>1.5$
4). For Unsubmerged Flow, $Q/AD^{0.5}<3.5$
5). For Submerged Flow, $Q/AD^{0.5}$-4.0

												Unsubmerged				Submerged	
												Form 1 Data		Form 2 Data			
												Y	X	Y	X	Y	X
												$\ln(H_w/D-H_c/D+0.5S)$					
Reading Number	H_w (mm)	H_w (ft)	D (ft)	Q (ft^3/s)	Q (m^3/s)	A (ft^2)	S (ft/ft)	H_c (ft)	$Q/(AD^{0.5})$	H_w/D	H_c/D	$H_w/D-H_c/D+0.5S$	$\ln(Q/(AD^{0.5}))$	$\ln(H_w/D)$	$\ln(Q/(AD^{0.5}))$	$H_w/D+0.5S$	$(Q/(AD^{0.5}))^2$
0	0.0	0.0000	0.9583	0.0000	0.0000	0.72131	0.0200	0.0000	0.00000	0.00000	0.0000						
1	58.7	0.1926	0.9583	0.1554	0.0044	0.72131	0.0200	0.2196	0.2201	0.2010	0.2292	-0.0182	#NUM!	-1.5139	-1.6047	-1.5139	
2	95.4	0.3129	0.9583	0.3849	0.0109	0.72131	0.0200	0.3519	0.5451	0.3265	0.3672	-0.0308	#NUM!	-0.6067	-1.1194	-0.6067	
3	138.3	0.4538	0.9583	0.7734	0.0219	0.72131	0.0200	0.5107	1.0953	0.4736	0.5329	-0.0493	#NUM!	0.0910	-0.7474	0.0910	
4	168.0	0.5512	0.9583	1.1901	0.0337	0.72131	0.0200	0.6476	1.6854	0.5751	0.6757	-0.0906	#NUM!	0.5220	-0.5531	0.5220	
5	197.3	0.6473	0.9583	1.3914	0.0394	0.72131	0.0200	0.7074	1.9705	0.6755	0.7381	-0.0527	#NUM!	0.6783	-0.3924	0.6783	
6	214.7	0.7045	0.9583	1.6492	0.0467	0.72131	0.0200	0.7802	2.3356	0.7351	0.8141	-0.0690	#NUM!	0.8483	-0.3077	0.8483	
7	234.9	0.7707	0.9583	1.9211	0.0544	0.72131	0.0200	0.8602	2.7207	0.8042	0.8976	-0.0835	#NUM!	1.0009	-0.2179	1.0009	
8	257.4	0.8445	0.9583	2.2284	0.0631	0.72131	0.0200	0.9378	3.1558	0.8812	0.9786	-0.0874	#NUM!	1.1492	-0.1265	1.1492	
9	276.0	0.9056	0.9583	2.4826	0.0703	0.72131	0.0200	0.9995	3.5158	0.9450	1.0429	-0.0879	#NUM!	1.2573	-0.0566	1.2573	
10	305.9	1.0036	0.9583	2.8393	0.0804	0.72131	0.0200		4.0210	1.0472						1.0572	16.1682
11	323.6	1.0617	0.9583	2.9735	0.0842	0.72131	0.0200		4.2110	1.1078						1.1178	17.7326
12	338.9	1.1118	0.9583	3.1430	0.0890	0.72131	0.0200		4.4511	1.1601						1.1701	19.8120
13*	367.6	1.2060	0.9583	3.7116	0.1051	0.72131	0.0200		5.2563	1.2585						1.2685	27.6283
14*	377.4	1.2383	0.9583	3.9305	0.1113	0.72131	0.0200		5.5663	1.2921						1.3021	30.9841
15*	398.5	1.3075	0.9583	4.1565	0.1177	0.72131	0.0200		5.8864	1.3644						1.3744	34.6499

* barrel was full at this point

Date: 8/11/1997
Run#: 5
Reducer Number: 6 Inlet No. 12

Barrel Slope: 1.5 percent
Inlet Diameter: 11.5 inches

Culvert Barrel Diameter: 9.5 inches
Barrel Cross Sectional Area: 0.72131 ft^2
Calculated Barrel Diameter: (11.5 inches = 0.95833 ft)
Barrel Length: 12 feet

Unsubmerged Inlet Control Design Constants

Form (1)
K = 1.0000
M = 0.0000

Form (2)
K = 0.477
M = 0.539

Submerged Inlet Control Design Constants

c = 0.050
Y = 0.246

Definitions:

H_W = Headwater depth above inlet control section invert, ft
D = Interior height of culvert barrel, ft
H_c = Specific head at critical depth ($d + V^2/2g$), ft
Q = Discharge, ft^3/s
A = Full cross sectional area of culvert barrel, ft^2
S = Culvert barrel slope, ft/ft
K,M = Constants

Notes:

1). For mitered inlets use +0.7S instead of -0.5S as the slope correction factor
2). For Unsubmerged Flow, $H_W/D<1.2$
3). For Submerged Flow, $H_W/D>1.5$
4). For Unsubmerged Flow, $Q/AD^{0.5}<3.5$
5). For Submerged Flow, $Q/AD^{0.5}$-4.0

													Unsubmerged				Submerged	
													Form 1 Data		Form 2 Data			
													Y	X	Y	X	Y	X
													$\ln(H_w/D-H_c/D+0.5S)$					
Reading Number	H_w (mm)	H_w (ft)	D (ft)	Q (ft^3/s)	Q (m^3/s)	A (ft^2)	S (ft/ft)	H_c (ft)	$Q/(AD^{0.5})$	H_w/D	H_c/D	$H_w/D-H_c/D+0.5S$		$\ln(Q/(AD^{0.5}))$	$\ln(H_w/D)$	$\ln(Q/(AD^{0.5}))$	$H_w/D+0.5S$	$(Q/(AD^{0.5}))^2$
0	0.0	0.0000	0.9583	0.0000	0.0000	0.72131	0.0150	0.0000	0.0000	0.0000	0.0000							
1	63.6	0.2088	0.9583	0.1589	0.0045	0.72131	0.0150	0.2222	0.2251	0.2178	0.2318	-0.0065	#NUM!	-1.4914	-1.5240	-1.4914		
2	104.0	0.3411	0.9583	0.4167	0.0118	0.72131	0.0150	0.3670	0.5901	0.3559	0.3829	-0.0195	#NUM!	-0.5274	-1.0330	-0.5274		
3	149.5	0.4906	0.9583	0.8476	0.0240	0.72131	0.0150	0.5367	1.2003	0.5119	0.5601	-0.0407	#NUM!	0.1826	-0.6696	0.1826		
4	180.1	0.5910	0.9583	1.1407	0.0323	0.72131	0.0150	0.6324	1.6154	0.6167	0.6599	-0.0357	#NUM!	0.4796	-0.4834	0.4796		
5	200.4	0.6575	0.9583	1.3949	0.0395	0.72131	0.0150	0.7084	1.9755	0.6861	0.7392	-0.0456	#NUM!	0.6808	-0.3768	0.6808		
6	224.4	0.7361	0.9583	1.7022	0.0482	0.72131	0.0150	0.7948	2.4106	0.7681	0.8293	-0.0537	#NUM!	0.8799	-0.2638	0.8799		
7	246.9	0.8101	0.9583	2.0483	0.0580	0.72131	0.0150	0.8873	2.9007	0.8454	0.9259	-0.0730	#NUM!	1.0650	-0.1680	1.0650		
8	266.6	0.8746	0.9583	2.3096	0.0654	0.72131	0.0150	0.9551	3.2708	0.9126	0.9967	-0.0766	#NUM!	1.1850	-0.0915	1.1850		
9	280.1	0.9191	0.9583	2.4968	0.0707	0.72131	0.0150	1.0031	3.5359	0.9590	1.0467	-0.0802	#NUM!	1.2630	-0.0418	1.2630		
10	310.2	1.0177	0.9583	2.8358	0.0803	0.72131	0.0150		4.0160	1.0620							1.0695	16.1280
11	325.2	1.0669	0.9583	2.9735	0.0842	0.72131	0.0150		4.2110	1.1133							1.1208	17.7326
12	363.9	1.1938	0.9583	3.1571	0.0894	0.72131	0.0150		4.4711	1.2457							1.2532	19.9905
13	423.3	1.3887	0.9583	3.4608	0.0980	0.72131	0.0150		4.9012	1.4490							1.4565	24.0216
14*	390.2	1.2802	0.9583	3.7434	0.106	0.72131	0.0150		5.3013	1.3358							1.3433	28.1035
15*	410.0	1.3450	0.9583	3.9341	0.1114	0.72131	0.0150		5.5713	1.4035							1.4110	31.0398
16*	468.7	1.5377	0.9583	4.2307	0.1198	0.72131	0.0150		5.9914	1.6046							1.6121	35.8974

* barrel was full at this point

Date: 9/2/1997
Run#: 6
Reducer Number: 7 Inlet No. 12

Barrel Slope: 2.0 percent
Inlet Diameter: 11.5 inches/8.75 inches

Culvert Barrel Diameter: 8.75 inches
Barrel Cross Sectional Area: 0.41758 ft^2
Calculated Barrel Diameter: (8.75 inches = 0.729166 ft)
Barrel Length: 12 feet

Unsubmerged Inlet Control Design Constants

Form (1)
K = 1.0000
M = 0.0000

Form (2)
K = 0.480
M = 0.527

Submerged Inlet Control Design Constants

c = 0.0000
Y = 0.0000

Definitions:

H_W = Headwater depth above inlet control section invert, ft
D = Interior height of culvert barrel, ft
H_C = Specific head at critical depth ($d + V^2/2g$), ft
Q = Discharge, ft^3/s
A = Full cross sectional area of culvert barrel, ft^2
S = Culvert barrel slope, ft/ft
K,M = Constants

Notes:

1). For mitered inlets use +0.7S instead of -0.5S as the slope correction factor
2). For Unsubmerged Flow, $H_W/D<1.2$
3). For Submerged Flow, $H_W/D>1.5$
4). For Unsubmerged Flow, $Q/AD^{0.5}<3.5$
5). For Submerged Flow, $Q/AD^{0.5}$-4.0

												Unsubmerged					Submerged	
												Form 1 Data			Form 2 Data			
												Y	X		Y	X	Y	X
												$\ln(H_w/D-H_c/D+0.5S)$						
Reading Number	H_w (mm)	H_w (ft)	D (ft)	Q (ft^3/s)	Q (m^3/s)	A (ft^2)	S (ft/ft)	H_c (ft)	$Q/(AD^{0.5})$	H_w/D	H_c/D	$H_w/D-H_c/D+0.5S$		$\ln(Q/(AD^{0.5}))$	$\ln(H_w/D)$	$\ln(Q/(AD^{0.5}))$	$H_w/D+0.5S$	$(Q/(AD^{0.5}))^2$
0	0.0	0.0000	0.9583	0.0000	0.0000	0.72131	0.0200	0.0000	0.0000	0.0000	0.0000							
1	64.8	0.2127	0.9583	0.1554	0.0044	0.72131	0.0200	0.2196	0.2201	0.2220	0.2292	0.0028	-5.8836	-1.5139	-1.5053	-1.5139		
2	84.9	0.2787	0.9583	0.2719	0.0077	0.72131	0.0200	0.2934	0.3851	0.2908	0.3062	-0.0054	#NUM!	-0.9543	-1.2352	-0.9543		
3	123.1	0.4038	0.9583	0.5827	0.0165	0.72131	0.0200	0.4384	0.8252	0.4213	0.4575	-0.0262	#NUM!	-0.1921	-0.8644	-0.1921		
4	169.4	0.5557	0.9583	1.2537	0.0355	0.72131	0.0200	0.6668	1.7754	0.5798	0.6958	-0.1060	#NUM!	0.5740	-0.5450	0.5740		
5	198.6	0.6515	0.9583	1.3631	0.0386	0.72131	0.0200	0.6992	1.9305	0.6798	0.7296	-0.0398	#NUM!	0.6578	-0.3860	0.6578		
6	220.8	0.7245	0.9583	1.5538	0.0440	0.72131	0.0200	0.7537	2.2005	0.7560	0.7865	-0.0205	#NUM!	0.7887	-0.2797	0.7887		
7	242.8	0.7967	0.9583	1.8858	0.0534	0.72131	0.0200	0.8444	2.6706	0.8313	0.8811	-0.0397	#NUM!	0.9823	-0.1847	0.9823		
8	260.1	0.8533	0.9583	2.1295	0.0603	0.72131	0.0200	0.9085	3.0157	0.8904	0.9480	-0.0476	#NUM!	1.1038	-0.1160	1.1038		
9*	302.7	0.9930	0.9583	2.6274	0.0744	0.72131	0.0200		3.7209	1.0362							1.0462	13.8451
10*	362.7	1.1900	0.9583	3.1254	0.0885	0.72131	0.0200		4.4261	1.2417							1.2517	19.5902
11*	450.6	1.4785	0.9583	3.6339	0.1029	0.72131	0.0200		5.1463	1.5427							1.5527	26.4839

"*" means that the barrel was full at this point.

Date: 8/27/1997
Run#: 7
Reducer Number: 8 Inlet No. 12

Barrel Slope: 2.0 percent
Inlet Diameter: 11.5 inches/8.75 inches

Culvert Barrel Diameter: 8.75 inches
Barrel Cross Sectional Area: 0.41758 ft^2
Calculated Barrel Diameter: (8.75 inches = 0.729166 ft)
Barrel Length: 12 feet

Unsubmerged Inlet Control Design Constants

Form (1)
K = 1.0000
M = 0.0000

Form (2)
K = 0.488
M = 0.525

Submerged Inlet Control Design Constants

c = 0.0000
Y = 0.0000

Definitions:

H_W = Headwater depth above inlet control section invert, ft
D = Interior height of culvert barrel, ft
H_c = Specific head at critical depth ($d + V^2/2g$), ft
Q = Discharge, ft^3/s
A = Full cross sectional area of culvert barrel, ft^2
S = Culvert barrel slope, ft/ft
K,M = Constants

Notes:

1). For mitered inlets use +0.7S instead of -0.5S as the slope correction factor
2). For Unsubmerged Flow, $H_W/D<1.2$
3). For Submerged Flow, $H_W/D>1.5$
4). For Unsubmerged Flow, $Q/AD^{0.5}<3.5$
5). For Submerged Flow, $Q/AD^{0.5}$-4.0

												Unsubmerged				Submerged	
												Form 1 Data		Form 2 Data			
												Y	X	Y	X	Y	X
												$\ln(H_w/D-H_c/D+0.5S)$					
Reading Number	H_w (mm)	H_w (ft)	D (ft)	Q (ft^3/s)	Q (m^3/s)	A (ft^2)	S (ft/ft)	H_c (ft)	$Q/(AD^{0.5})$	H_w/D	H_c/D	$H_w/D-H_c/D+0.5S$	$\ln(Q/(AD^{0.5}))$	$\ln(H_w/D)$	$\ln(Q/(AD^{0.5}))$	$H_w/D+0.5S$	$(Q/(AD^{0.5}))^2$
0	0.0	0.0000	0.9583	0.0000	0.0000	0.72131	0.0200	0.0000	0.0000	0.0000	0.0000						
1	80.4	0.2637	0.9583	0.2260	0.0064	0.72131	0.0200	0.2665	0.3201	0.2751	0.2781	0.0070	-4.9592	-1.1392	-1.1392		
2	112.6	0.3694	0.9583	0.4591	0.0130	0.72131	0.0200	0.3862	0.6502	0.3855	0.4030	-0.0075	#NUM!	-0.4305	-0.4305		
3	151.7	0.4978	0.9583	0.8122	0.0230	0.72131	0.0200	0.5244	1.1503	0.5195	0.5472	-0.0178	#NUM!	0.1400	-0.6550	0.1400	
4	179.3	0.5884	0.9583	1.2148	0.0344	0.72131	0.0200	0.6551	1.7204	0.6139	0.6836	-0.0596	#NUM!	0.5426	-0.4878	0.5426	
5	205.5	0.6742	0.9583	1.4197	0.0402	0.72131	0.0200	0.7156	2.0105	0.7035	0.7467	-0.0331	#NUM!	0.6984	-0.3516	0.6984	
6	227.8	0.7473	0.9583	1.6598	0.0470	0.72131	0.0200	0.7831	2.3506	0.7798	0.8172	-0.0274	#NUM!	0.8547	-0.2488	0.8547	
7	245.7	0.8061	0.9583	1.9247	0.0545	0.72131	0.0200	0.8547	2.7257	0.8412	0.8919	-0.0407	#NUM!	1.0027	-0.1730	1.0027	
8	265.8	0.8720	0.9583	2.2142	0.0627	0.72131	0.0200	0.9305	3.1358	0.9100	0.9710	-0.0510	#NUM!	1.1429	-0.0944	1.1429	
9*	462.8	1.5184	0.9583	3.7080	0.1050	0.72131	0.0200		5.2513	1.5844	0.0000	1.5944	0.4665	1.6585		1.5944	27.5759
10*	539.9	1.7712	0.9583	3.9694	0.1124	0.72131	0.0200		5.6214	1.8482	0.0000	1.8582	0.6196	1.7266		1.8582	31.5998

* barrel was full at this point

Date: 9/4/1997
Run#: 8
Reducer Number: 9 Inlet No. 12

Barrel Slope: 2.0 percent
Inlet Diameter: 11.5 inches/8.75 inches

Culvert Barrel Diameter: 8.75 inches
Barrel Cross Sectional Area: 0.41758 ft^2
Calculated Barrel Diameter: (8.75 inches = 0.729166 ft)
Barrel Length: 12 feet

Unsubmerged Inlet Control Design Constants

Form (1)
K = 1.0000
M = 0.0000

Form (2)
K = 0.461
M = 0.556

Submerged Inlet Control Design Constants

c = 0.0000
Y = 0.0000

Definitions:

H_W = Headwater depth above inlet control section invert, ft
D = Interior height of culvert barrel, ft
H_C = Specific head at critical depth ($d + V^2/2g$), ft
Q = Discharge, ft^3/s
A = Full cross sectional area of culvert barrel, ft^2
S = Culvert barrel slope, ft/ft
K,M = Constants

Notes:

1). For mitered inlets use +0.7S instead of -0.5S as the slope correction factor
2). For Unsubmerged Flow, $H_W/D<1.2$
3). For Submerged Flow, $H_W/D>1.5$
4). For Unsubmerged Flow, $Q/AD^{0.5}$ <3.5
5). For Submerged Flow, $Q/AD^{0.5}$-4.0

												Unsubmerged					Submerged	
												Form 1 Data			Form 2 Data			
												Y	X		Y	X	Y	X
Reading Number	H_w (mm)	H_w (ft)	D (ft)	Q (ft^3/s)	Q (m^3/s)	A (ft^2)	S (ft/ft)	H_c (ft)	$Q/(AD^{0.5})$	H_w/D	H_c/D	$H_w/D-H_c/D+0.5S$	$\ln(H_w/D-H_c/D+0.5S)$	$\ln(Q/(AD^{0.5}))$	$\ln(H_w/D)$	$\ln(Q/(AD^{0.5}))$	$H_w/D+0.5S$	$(Q/(AD^{0.5}))^2$
0	0.0	0.0000	0.9583	0.0000	0.0000	0.72131	0.0200	0.0000	0.0000	0.0000	0.0000							
1	51.1	0.1677	0.9583	0.1201	0.0034	0.72131	0.0200	0.1924	0.1700	0.1749	0.2007	-0.0158	#NUM!	-1.7717	-1.7433	-1.7717		
2	81.6	0.2676	0.9583	0.2860	0.0081	0.72131	0.0200	0.3013	0.4051	0.2792	0.3144	-0.0251	#NUM!	-0.9036	-1.2757	-0.9036		
3	127.8	0.4193	0.9583	0.6498	0.0184	0.72131	0.0200	0.4648	0.9202	0.4375	0.4850	-0.0375	#NUM!	-0.0831	-0.8266	-0.0831		
4	164.9	0.5410	0.9583	1.2501	0.0354	0.72131	0.0200	0.6657	1.7704	0.5645	0.6947	-0.1201	#NUM!	0.5712	-0.5718	0.5712		
5	193.2	0.6337	0.9583	1.2925	0.0366	0.72131	0.0200	0.6784	1.8304	0.6613	0.7079	-0.0366	#NUM!	0.6046	-0.4135	0.6046		
6	216.5	0.7104	0.9583	1.5750	0.0446	0.72131	0.0200	0.7596	2.2305	0.7413	0.7927	-0.0414	#NUM!	0.8022	-0.2994	0.8022		
7	236.4	0.7757	0.9583	1.8540	0.0525	0.72131	0.0200	0.8359	2.6256	0.8094	0.8722	-0.0528	#NUM!	0.9653	-0.2114	0.9653		
8	255.9	0.8397	0.9583	2.1365	0.0605	0.72131	0.0200	0.9104	3.0257	0.8762	0.9500	-0.0638	#NUM!	1.1072	-0.1322	1.1072		
9*	316.2	1.0374	0.9583	2.6521	0.0751	0.72131	0.0200		3.7559	1.0825							1.0925	14.1069
10*	414.9	1.3611	0.9583	3.1254	0.0885	0.72131	0.0200		4.4261	1.4203							1.4303	19.5902
11*	438.7	1.4392	0.9583	3.6304	0.1028	0.72131	0.0200		5.1413	1.5018							1.5118	26.4325

* barrel was full at this point

Date: 10/31/1997
Run#: 9
Reducer Number: 1 Inlet No. 13

Barrel Slope: 2.8 percent
Inlet Diameter: 11.5 inches/8.625 inches

Culvert Barrel Diameter: 8.625 inches
Barrel Cross Sectional Area: 0.4057 ft^2
Calculated Barrel Diameter: (8.625 inches = 0.71875 ft)
Barrel Length: 12 feet

Unsubmerged Inlet Control Design Constants

Form (1)
K = 1.0000
M = 0.0000

Form (2)
K = 0.480
M = 0.531

Submerged Inlet Control Design Constants

c = 0.0000
Y = 0.0000

Definitions:

H_W = Headwater depth above inlet control section invert, ft
D = Interior height of culvert barrel, ft
H_C = Specific head at critical depth ($d + V^2/2g$), ft
Q = Discharge, ft^3/s
A = Full cross sectional area of culvert barrel, ft^2
S = Culvert barrel slope, ft/ft
K,M = Constants

Notes:

1). For mitered inlets use +0.7S instead of -0.5S as the slope correction factor
2). For Unsubmerged Flow, $H_W/D<1.2$
3). For Submerged Flow, $H_W/D>1.5$
4). For Unsubmerged Flow, $Q/AD^{0.5}<3.5$
5). For Submerged Flow, $Q/AD^{0.5}$-4.0

												Unsubmerged				Submerged	
												Form 1 Data		Form 2 Data			
												Y	X	Y	X	Y	X
												$\ln(H_w/D-H_c/D+0.5S)$					
Reading Number	H_w (mm)	H_w (ft)	D (ft)	Q (ft^3/s)	Q (m^3/s)	A (ft^2)	S (ft/ft)	H_c (ft)	$Q/(AD^{0.5})$	H_w/D	H_c/D	$H_w/D-H_c/D+0.5S$		$\ln(Q/(AD^{0.5}))$	$\ln(H_w/D)$	$\ln(Q/(AD^{0.5}))$	$H_w/D+0.5S$	$(Q/(AD^{0.5}))^2$
0	0.0	0.0000	0.9583	0.0000	0.0000	0.72131	0.0280	0.0000	0.0000	0.0000	0.0000							
1	74.4	0.2441	0.9583	0.1978	0.0056	0.72131	0.0280	0.2487	0.2801	0.2547	0.2595	0.0092	-4.6916	-1.2727	-1.3676	-1.2727		
2	108.4	0.3556	0.9583	0.4662	0.0132	0.72131	0.0280	0.3894	0.6602	0.3711	0.4063	-0.0212	#NUM!	-0.4153	-0.9913	-0.4153		
3	146.7	0.4814	0.9583	0.8193	0.0232	0.72131	0.0280	0.5269	1.1603	0.5023	0.5498	-0.0335	#NUM!	0.1487	-0.6885	0.1487		
4	175.6	0.5760	0.9583	1.1018	0.0312	0.72131	0.0280	0.6203	1.5604	0.6011	0.6472	-0.0322	#NUM!	0.4449	-0.5091	0.4449		
5	200.3	0.6572	0.9583	1.3985	0.0396	0.72131	0.0280	0.7094	1.9805	0.6857	0.7403	-0.0406	#NUM!	0.6833	-0.3773	0.6833		
6	221.4	0.7264	0.9583	1.6669	0.0472	0.72131	0.0280	0.7851	2.3606	0.7580	0.8192	-0.0473	#NUM!	0.8589	-0.2771	0.8589		
7	243.5	0.7988	0.9583	1.9529	0.0553	0.72131	0.0280	0.8622	2.7657	0.8335	0.8997	-0.0522	#NUM!	1.0173	-0.1821	1.0173		
8	263.7	0.8650	0.9583	2.2390	0.0634	0.72131	0.0280	0.9369	3.1708	0.9027	0.9777	-0.0610	#NUM!	1.1540	-0.1024	1.1540		
9	278.3	0.9131	0.9583	2.4932	0.0706	0.72131	0.0280	1.0022	3.5309	0.9528	1.0457	-0.0790	#NUM!	1.2615	-0.0484	1.2615		
10*	379.1	1.2437	0.9583	3.4891	0.0988	0.72131	0.0280		4.9412	1.2977							1.3117	24.4155
11*	533.0	1.7486	0.9583	4.0506	0.1147	0.72131	0.0280		5.7364	1.8246							1.8386	32.9062

* barrel was full at this point

Date: 10/16/1997
Run#: 10
Reducer Number: 2 Inlet No. 13

Barrel Slope: 1.0 percent
Inlet Diameter: 11.5 inches/8.625 inches

Culvert Barrel Diameter: 8.625 inches
Barrel Cross Sectional Area: 0.4057 ft^2
Calculated Barrel Diameter: (8.625 inches = 0.71875 ft)
Barrel Length: 12 feet

Unsubmerged Inlet Control Design Constants

Form (1)
K = 1.0000
M = 0.0000

Form (2)
K = 0.460
M = 0.531

Submerged Inlet Control Design Constants

c = 0.0000
Y = 0.0000

Definitions:

H_W = Headwater depth above inlet control section invert, ft
D = Interior height of culvert barrel, ft
H_C = Specific head at critical depth ($d + V^2/2g$), ft
Q = Discharge, ft^3/s
A = Full cross sectional area of culvert barrel, ft^2
S = Culvert barrel slope, ft/ft
K,M = Constants

Notes:

1). For mitered inlets use +0.7S instead of -0.5S as the slope correction factor
2). For Unsubmerged Flow, $H_W/D<1.2$
3). For Submerged Flow, $H_W/D>1.5$
4). For Unsubmerged Flow, $Q/AD^{0.5}<3.5$
5). For Submerged Flow, $Q/AD^{0.5}$-4.0

												Unsubmerged				Submerged	
												Form 1 Data		Form 2 Data			
												Y	X	Y	X	Y	X
												$\ln(H_w/D-H_c/D+0.5S)$					
Reading Number	H_w (mm)	H_w (ft)	D (ft)	Q (ft^3/s)	Q (m^3/s)	A (ft^2)	S (ft/ft)	H_c (ft)	$Q/(AD^{0.5})$	H_w/D	H_c/D	$H_w/D-H_c/D+0.5S$		$\ln(Q/(AD^{0.5}))$	$\ln(H_w/D)$	$\ln(Q/(AD^{0.5}))$	$H_w/D+0.5S$	$(Q/(AD^{0.5}))^2$
0	0.0	0.0000	0.9583	0.0000	0.0000	0.72131	0.0100	0.0000	0.0000	0.0000	0.0000							
1	65.6	0.2152	0.9583	0.1695	0.0048	0.72131	0.0100	0.2297	0.2401	0.2246	0.2397	-0.0101	#NUM!	-1.4269	-1.4935	-1.4269		
2	105.5	0.3460	0.9583	0.4803	0.0136	0.72131	0.0100	0.3956	0.6802	0.3611	0.4128	-0.0467	#NUM!	-0.3854	-1.0187	-0.3854		
3	143.2	0.4697	0.9583	0.8264	0.0234	0.72131	0.0100	0.5294	1.1703	0.4901	0.5524	-0.0573	#NUM!	0.1572	-0.7131	0.1572		
4	169.5	0.5561	0.9583	1.2113	0.0343	0.72131	0.0100	0.6540	1.7154	0.5803	0.6824	-0.0972	#NUM!	0.5397	-0.5442	0.5397		
5	193.4	0.6344	0.9583	1.4161	0.0401	0.72131	0.0100	0.7145	2.0055	0.6620	0.7456	-0.0786	#NUM!	0.6959	-0.4125	0.6959		
6	216.4	0.7099	0.9583	1.6421	0.0465	0.72131	0.0100	0.7783	2.3256	0.7407	0.8121	-0.0664	#NUM!	0.8440	-0.3001	0.8440		
7	236.2	0.7749	0.9583	1.9247	0.0545	0.72131	0.0100	0.8547	2.7257	0.8086	0.8919	-0.0782	#NUM!	1.0027	-0.2124	1.0027		
8	253.1	0.8305	0.9583	2.2178	0.0628	0.72131	0.0100	0.9315	3.1408	0.8666	0.9720	-0.1004	#NUM!	1.1445	-0.1432	1.1445		
9*	367.8	1.2066	0.9583	3.1960	0.0905	0.72131	0.0100		4.5261	1.2590							1.2640	20.4856
10*	429.1	1.4079	0.9583	3.4538	0.0978	0.72131	0.0100		4.8912	1.4691							1.4741	23.9237
11*	489.4	1.6055	0.9583	3.6798	0.1042	0.72131	0.0100		5.2113	1.6753							1.6803	27.1573
12*	553.8	1.8168	0.9583	3.9093	0.1107	0.72131	0.0100		5.5363	1.8958							1.9008	30.6511
13*	619.3	2.0318	0.9583	4.1248	0.1168	0.72131	0.0100		5.8414	2.1202							2.1252	34.1222

* barrel was full at this point

Date: 10/17/1997
Run#: 11
Reducer Number: 2 Inlet No. 13

Barrel Slope: 2.0 percent
Inlet Diameter: 11.5 inches/8.625 inches

Culvert Barrel Diameter: 8.625 inches
Barrel Cross Sectional Area: 0.4057 ft^2
Calculated Barrel Diameter: (8.625 inches = 0.71875 ft)
Barrel Length: 12 feet

Unsubmerged Inlet Control Design Constants

Form (1)
K = 1.0000
M = 0.0000

Form (2)
K = 0.475
M = 0.505

Submerged Inlet Control Design Constants

c = 0.0000
Y = 0.0000

Definitions:

H_W = Headwater depth above inlet control section invert, ft
D = Interior height of culvert barrel, ft
H_C = Specific head at critical depth ($d + V^2/2g$), ft
Q = Discharge, ft^3/s
A = Full cross sectional area of culvert barrel, ft^2
S = Culvert barrel slope, ft/ft
K,M = Constants

Notes:

1). For mitered inlets use +0.7S instead of -0.5S as the slope correction factor
2). For Unsubmerged Flow, $H_W/D<1.2$
3). For Submerged Flow, $H_W/D>1.5$
4). For Unsubmerged Flow, $Q/AD^{0.5}<3.5$
5). For Submerged Flow, $Q/AD^{0.5}$-4.0

												Unsubmerged					Submerged	
												Form 1 Data			Form 2 Data			
												Y	X		Y	X	Y	X
												$\ln(H_w/D-H_c/D+0.5S)$						
Reading Number	H_w (mm)	H_w (ft)	D (ft)	Q (ft^3/s)	Q (m^3/s)	A (ft^2)	S (ft/ft)	H_c (ft)	$Q/(AD^{0.5})$	H_w/D	H_c/D	$H_w/D-H_c/D+0.5S$		$\ln(Q/(AD^{0.5}))$	$\ln(H_w/D)$	$\ln(Q/(AD^{0.5}))$	$H_w/D+0.5S$	$(Q/(AD^{0.5}))^2$
0	0.0	0.0000	0.9583	0.0000	0.0000	0.72131	0.0200	0.0000	0.0000	0.0000	0.0000							
1	65.6	0.2152	0.9583	0.1519	0.0043	0.72131	0.0200	0.2170	0.2151	0.2246	0.2265	0.0081	-4.8152	-1.5369	-1.4935	-1.5369		
2	105.5	0.3460	0.9583	0.4273	0.0121	0.72131	0.0200	0.3718	0.6051	0.3611	0.3880	-0.0170	#NUM!	-0.5023	-1.0187	-0.5023		
3	143.2	0.4697	0.9583	0.7593	0.0215	0.72131	0.0200	0.5056	1.0753	0.4901	0.5276	-0.0274	#NUM!	0.0726	-0.7131	0.0726		
4	169.5	0.5561	0.9583	1.1866	0.0336	0.72131	0.0200	0.6465	1.6804	0.5803	0.6746	-0.0843	#NUM!	0.5190	-0.5442	0.5190		
5	193.4	0.6344	0.9583	1.4091	0.0399	0.72131	0.0200	0.7125	1.9955	0.6620	0.7435	-0.0715	#NUM!	0.6909	-0.4125	0.6909		
6	216.4	0.7099	0.9583	1.6315	0.0462	0.72131	0.0200	0.7753	2.3106	0.7407	0.8090	-0.0583	#NUM!	0.8375	-0.3001	0.8375		
7	236.2	0.7749	0.9583	1.9141	0.0542	0.72131	0.0200	0.8519	2.7107	0.8086	0.8889	-0.0703	#NUM!	0.9972	-0.2124	0.9972		
8	253.1	0.8305	0.9583	2.1966	0.0622	0.72131	0.0200	0.9260	3.1108	0.8666	0.9662	-0.0896	#NUM!	1.1349	-0.1432	1.1349		
9*	367.8	1.2066	0.9583	2.4473	0.0693	0.72131	0.0200		3.4658	1.2590							1.2690	12.0121
10*	429.1	1.4079	0.9583	3.4220	0.0969	0.72131	0.0200		4.8462	1.4691							1.4791	23.4854
11*	489.4	1.6055	0.9583	3.6798	0.1042	0.72131	0.0200		5.2113	1.6753							1.6853	27.1573
12*	553.8	1.8168	0.9583	3.9093	0.1107	0.72131	0.0200		5.5363	1.8958							1.9058	30.6511
13*	619.3	2.0318	0.9583	4.1248	0.1168	0.72131	0.0200		5.8414	2.1202							2.1302	34.1222

* barrel was full at this point

Date: 10/22/1997
Run#: 12
Reducer Number: 2 Inlet No. 13

Barrel Slope: 2.8 percent
Inlet Diameter: 11.5 inches/8.625 inches

Culvert Barrel Diameter: 8.625 inches
Barrel Cross Sectional Area: 0.4057 ft^2
Calculated Barrel Diameter: (8.625 inches = 0.71875 ft)
Barrel Length: 12 feet

Unsubmerged Inlet Control Design Constants

Form (1)
K = 1.0000
M = 0.0000

Form (2)
K = 0.470
M = 0.538

Submerged Inlet Control Design Constants

c = 0.0000
Y = 0.0000

Definitions:

H_W = Headwater depth above inlet control section invert, ft
D = Interior height of culvert barrel, ft
H_C = Specific head at critical depth ($d + V^2/2g$), ft
Q = Discharge, ft^3/s
A = Full cross sectional area of culvert barrel, ft^2
S = Culvert barrel slope, ft/ft
K,M = Constants

Notes:

1). For mitered inlets use +0.7S instead of -0.5S as the slope correction factor
2). For Unsubmerged Flow, $H_W/D<1.2$
3). For Submerged Flow, $H_W/D>1.5$
4). For Unsubmerged Flow, $Q/AD^{0.5}<3.5$
5). For Submerged Flow, $Q/AD^{0.5}$-4.0

												Unsubmerged				Submerged	
												Form 1 Data		Form 2 Data			
												Y	X	Y	X	Y	X
Reading Number	H_w (mm)	H_w (ft)	D (ft)	Q (ft^3/s)	Q (m^3/s)	A (ft^2)	S (ft/ft)	H_c (ft)	$Q/(AD^{0.5})$	H_w/D	H_c/D	$H_w/D-H_c/D+0.5S$	$\ln(H_w/D-H_c/D+0.5S)$	$\ln(Q/(AD^{0.5}))$	$\ln(H_w/D)$	$\ln(Q/(AD^{0.5}))$	$H_w/D+0.5S$	$(Q/(AD^{0.5}))^2$
0	0.0	0.0000	0.9583	0.0000	0.0000	0.72131	0.0280	0.0000	0.0000	0.0000	0.0000						
1	68.0	0.2231	0.9583	0.1801	0.0051	0.72131	0.0280	0.2370	0.2551	0.2328	0.2473	-0.0005	#NUM!	-1.3662	-1.4576	-1.3662		
2	102.3	0.3355	0.9583	0.4097	0.0116	0.72131	0.0280	0.3637	0.5801	0.3501	0.3795	-0.0154	#NUM!	-0.5445	-1.0495	-0.5445		
3	136.4	0.4474	0.9583	0.7381	0.0209	0.72131	0.0280	0.4979	1.0453	0.4668	0.5195	-0.0387	#NUM!	0.0443	-0.7617	0.0443		
4	168.1	0.5516	0.9583	1.1724	0.0332	0.72131	0.0280	0.6422	1.6604	0.5756	0.6701	-0.0805	#NUM!	0.5071	-0.5523	0.5071		
5	196.8	0.6457	0.9583	1.4020	0.0397	0.72131	0.0280	0.7105	1.9855	0.6737	0.7413	-0.0536	#NUM!	0.6859	-0.3949	0.6859		
6	218.1	0.7157	0.9583	1.6209	0.0459	0.72131	0.0280	0.7724	2.2956	0.7468	0.8060	-0.0452	#NUM!	0.8310	-0.2920	0.8310		
7	239.5	0.7858	0.9583	1.8964	0.0537	0.72131	0.0280	0.8472	2.6857	0.8199	0.8840	-0.0501	#NUM!	0.9879	-0.1985	0.9879		
8	259.2	0.8502	0.9583	2.1719	0.0615	0.72131	0.0280	0.9196	3.0757	0.8872	0.9595	-0.0583	#NUM!	1.1235	-0.1197	1.1235		
9	270.2	0.8866	0.9583	2.4226	0.0686	0.72131	0.0280	0.9841	3.4308	0.9251	1.0269	-0.0878	#NUM!	1.2328	-0.0778	1.2328		
10*	378.4	1.2415	0.9583	3.4397	0.0974	0.72131	0.0280		4.8712	1.2954							1.3094	23.7284
11*	436.7	1.4327	0.9583	3.6551	0.1035	0.72131	0.0280		5.1763	1.4950							1.5090	26.7937
12*	511.6	1.6786	0.9583	3.9058	0.1106	0.72131	0.0280		5.5313	1.7516							1.7656	30.5958
13*	578.5	1.8980	0.9583	4.1212	0.1167	0.72131	0.0280		5.8364	1.9805							1.9945	34.0638

* barrel was full at this point

Date: 12/19/1997
Run#: Benchmark #2
Inlet Number: 12

Barrel Slope: 5.0 percent
Inlet Diameter: 11.5 inches

Culvert Barrel Diameter: 11.5 inches
Barrel Cross Sectional Area: 0.72131 ft^2
Calculated Barrel Diameter: (11.5 inches = 0.95833 ft)
Barrel Length: 12.9 feet

Unsubmerged Inlet Control Design Constants

Form (1)
K = 1.0000
M = 0.0000

Form (2)
K = 0.542
M = 0.529

Submerged Inlet Control Design Constants

c = 0.029
Y = 0.716

												Unsubmerged					Submerged	
												Form 1 Data		Form 2 Data				
												Y	X	Y	X		Y	X
Reading Number	H_w (mm)	H_w (ft)	D (ft)	Q (ft^3/s)	Q (m^3/s)	A (ft^2)	S (ft/ft)	H_c (ft)	$Q/(AD^{0.5})$	H_w/D	H_c/D	$H_w/D-H_c/D+0.5S$	$\ln(H_w/D-H_c/D+0.5S)$	$\ln(Q/(AD^{0.5}))$	$\ln(H_w/D)$	$\ln(Q/(AD^{0.5}))$	$H_w/D+0.5S$	$(Q/(AD^{0.5}))^2$
0	0.0	0.0000	0.9583	0.0000	0.0000	0.72131	0.0500	0.0000	0.0000	0.0000	0.0000							
1	117.4	0.3851	0.9583	0.3743	0.0106	0.72131	0.0500		0.5301	0.4018	0.0000	0.4268	-0.8514	-0.6346	-0.9118	-0.6346		
2	143.6	0.4712	0.9583	0.6039	0.0171	0.72131	0.0500		0.8552	0.4917	0.0000	0.5167	-0.6602	-0.1564	-0.7098	-0.1564		
3	173.2	0.5684	0.9583	0.8617	0.0244	0.72131	0.0500		1.2203	0.5931	0.0000	0.6181	-0.4812	0.1991	-0.5225	0.1991		
4	203.0	0.6659	0.9583	1.1689	0.0331	0.72131	0.0500		1.6554	0.6949	0.0000	0.7199	-0.3287	0.5040	-0.3641	0.5040		
5	227.2	0.7455	0.9583	1.4408	0.0408	0.72131	0.0500		2.0405	0.7779	0.0000	0.8029	-0.2195	0.7132	-0.2511	0.7132		
6	251.4	0.8248	0.9583	1.7304	0.0490	0.72131	0.0500		2.4506	0.8607	0.0000	0.8857	-0.1214	0.8963	-0.1501	0.8963		
7	272.2	0.8929	0.9583	1.9953	0.0565	0.72131	0.0500		2.8257	0.9318	0.0000	0.9568	-0.0442	1.0388	-0.0707	1.0388		
8	291.0	0.9548	0.9583	2.2637	0.0641	0.72131	0.0500		3.2058	0.9963	0.0000	1.0213	0.0211	1.1650	-0.0037	1.1650		
9	329.3	1.0803	0.9583	2.5179	0.0713	0.72131	0.0500		3.5659	1.1272	0.0000	1.1522	0.1417	1.2714	0.1198	1.2714		
10	333.1	1.0930	0.9583	2.7793	0.0787	0.72131	0.0500		3.9360	1.1405							1.1655	15.4918
11	361.1	1.1848	0.9583	3.0265	0.0857	0.72131	0.0500		4.2860	1.2363							1.2613	18.3702
12	372.0	1.2204	0.9583	3.2666	0.0925	0.72131	0.0500		4.6261	1.2734							1.2984	21.4010
13	413.3	1.3559	0.9583	3.4891	0.0988	0.72131	0.0500		4.9412	1.4148							1.4398	24.4155
14	374.6	1.2290	0.9583	3.7398	0.1059	0.72131	0.0500		5.2963	1.2824							1.3074	28.0507
15	376.8	1.2363	0.9583	3.9694	0.1124	0.72131	0.0500		5.6214	1.2901							1.3151	31.5998
16	395.6	1.2978	0.9583	4.2625	0.1207	0.72131	0.0500		6.0365	1.3542							1.3792	36.4389

* barrel was full at this point.

Date: 10/24/1997
Run#: 13
Reducer Number: 2 Inlet No. 13

Barrel Slope: 3.5 percent
Inlet Diameter: 11.5 inches/8.625 inches

Culvert Barrel Diameter: 8.625 inches
Barrel Cross Sectional Area: 0.4057 ft^2
Calculated Barrel Diameter: (8.625 inches = 0.71875 ft)
Barrel Length: 12 feet

Unsubmerged Inlet Control Design Constants

Form (1)
K = 1.0000
M = 0.0000

Form (2)
K = 0.474
M = 0.529

Submerged Inlet Control Design Constants

c = 0.0000
Y = 0.0000

Definitions:

H_W = Headwater depth above inlet control section invert, ft
D = Interior height of culvert barrel, ft
H_c = Specific head at critical depth ($d + V^2/2g$), ft
Q = Discharge, ft^3/s
A = Full cross sectional area of culvert barrel, ft^2
S = Culvert barrel slope, ft/ft
K,M = Constants

Notes:

1). For mitered inlets use +0.7S instead of -0.5S as the slope correction factor
2). For Unsubmerged Flow, $H_W/D<1.2$
3). For Submerged Flow, $H_W/D>1.5$
4). For Unsubmerged Flow, $Q/AD^{0.5}<3.5$
5). For Submerged Flow, $Q/AD^{0.5}$-4.0

													Unsubmerged			Submerged	
													Form 1 Data		Form 2 Data		
													Y	X	Y	X	Y	X
													$\ln(H_w/D-H_c/D+0.5S)$					
Reading Number	H_w (mm)	H_w (ft)	D (ft)	Q (ft^3/s)	Q (m^3/s)	A (ft^2)	S (ft/ft)	H_c (ft)	$Q/(AD^{0.5})$	H_w/D	H_c/D	$H_w/D-H_c/D+0.5S$		$\ln(Q/(AD^{0.5}))$	$\ln(H_w/D)$	$\ln(Q/(AD^{0.5}))$	$H_w/D+0.5S$	$(Q/(AD^{0.5}))^2$
0	0.0	0.0000	0.9583	0.0000	0.0000	0.72131	0.0350	0.0000	0.0000	0.0000	0.0000							
1	61.5	0.2018	0.9583	0.1413	0.0040	0.72131	0.0350	0.2091	0.2000	0.2105	0.2182	0.0098	-4.6215	-1.6092	-1.5581	-1.6092		
2	103.2	0.3385	0.9583	0.4167	0.0118	0.72131	0.0350	0.3670	0.5901	0.3532	0.3829	-0.0122	#NUM!	-0.5274	-1.0408	-0.5274		
3	137.1	0.4498	0.9583	0.7381	0.0209	0.72131	0.0350	0.4979	1.0453	0.4694	0.5195	-0.0327	#NUM!	0.0443	-0.7564	0.0443		
4	169.3	0.5553	0.9583	1.1866	0.0336	0.72131	0.0350	0.6465	1.6804	0.5795	0.6746	-0.0776	#NUM!	0.5190	-0.5456	0.5190		
5	195.8	0.6425	0.9583	1.3843	0.0392	0.72131	0.0350	0.7053	1.9605	0.6704	0.7360	-0.0481	#NUM!	0.6732	-0.3998	0.6732		
6	217.7	0.7141	0.9583	1.6033	0.0454	0.72131	0.0350	0.7675	2.2706	0.7452	0.8009	-0.0382	#NUM!	0.8200	-0.2941	0.8200		
7	238.2	0.7816	0.9583	1.8823	0.0533	0.72131	0.0350	0.8434	2.6656	0.8156	0.8801	-0.0470	#NUM!	0.9804	-0.2038	0.9804		
8	257.6	0.8450	0.9583	2.1648	0.0613	0.72131	0.0350	0.9177	3.0657	0.8818	0.9576	-0.0584	#NUM!	1.1203	-0.1258	1.1203		
9	273.3	0.8967	0.9583	2.4226	0.0686	0.72131	0.0350	0.9841	3.4308	0.9356	1.0269	-0.0738	#NUM!	1.2328	-0.0665	1.2328		
10*	358.9	1.1775	0.9583	3.4608	0.0980	0.72131	0.0350		4.9012	1.2287							1.2462	24.0217
11*	394.5	1.2943	0.9583	3.6939	0.1046	0.72131	0.0350		5.2313	1.3506							1.3681	27.3662
12*	457.5	1.5011	0.9583	3.9093	0.1107	0.72131	0.0350		5.5363	1.5664							1.5839	30.6511
13*	526.5	1.7273	0.9583	4.1142	0.1165	0.72131	0.0350		5.8264	1.8024							1.8199	33.9471

* barrel was full at this point

Date: 10/29/1997
Run#: 14
Reducer Number: 3 Inlet No. 13

Barrel Slope: 2.8 percent
Inlet Diameter: 11.5 inches/8.625 inches

Culvert Barrel Diameter: 8.625 inches
Barrel Cross Sectional Area: 0.4057 ft^2
Calculated Barrel Diameter: (8.625 inches = 0.71875 ft)
Barrel Length: 12 feet

Unsubmerged Inlet Control Design Constants

Form (1)
K = 1.0000
M = 0.0000

Form (2)
K = 0.479
M = 0.521

Submerged Inlet Control Design Constants

c = 0.0000
Y = 0.0000

Definitions:

H_W = Headwater depth above inlet control section invert, ft
D = Interior height of culvert barrel, ft
H_C = Specific head at critical depth ($d + V^2/2g$), ft
Q = Discharge, ft^3/s
A = Full cross sectional area of culvert barrel, ft^2
S = Culvert barrel slope, ft/ft
K,M = Constants

Notes:

1). For mitered inlets use +0.7S instead of -0.5S as the slope correction factor
2). For Unsubmerged Flow, $H_W/D<1.2$
3). For Submerged Flow, $H_W/D>1.5$
4). For Unsubmerged Flow, $Q/AD^{0.5}<3.5$
5). For Submerged Flow, $Q/AD^{0.5}$-4.0

												Unsubmerged					Submerged	
												Form 1 Data			Form 2 Data			
												Y	X		Y	X	Y	X
												$\ln(H_w/D-H_c/D+0.5S)$						
Reading Number	H_w (mm)	H_w (ft)	D (ft)	Q (ft^3/s)	Q (m^3/s)	A (ft^2)	S (ft/ft)	H_c (ft)	$Q/(AD^{0.5})$	H_w/D	H_c/D	$H_w/D-H_c/D+0.5S$		$\ln(Q/(AD^{0.5}))$	$\ln(H_w/D)$	$\ln(Q/(AD^{0.5}))$	$H_w/D+0.5S$	$(Q/(AD^{0.5}))^2$
0	0.0	0.0000	0.9583	0.0000	0.0000	0.72131	0.0280	0.0000	0.0000	0.0000	0.0000							
1	56.8	0.1862	0.9583	0.1165	0.0033	0.72131	0.0280	0.1895	0.1650	0.1943	0.1977	0.0106	-4.5423	-1.8016	-1.6381	-1.8016		
2	104.3	0.3422	0.9583	0.4202	0.0119	0.72131	0.0280	0.3686	0.5951	0.3571	0.3846	-0.0135	#NUM!	-0.5190	-1.0298	-0.5190		
3	138.4	0.4540	0.9583	0.7345	0.0208	0.72131	0.0280	0.4966	1.0403	0.4737	0.5182	-0.0305	#NUM!	0.0395	-0.7472	0.0395		
4	171.3	0.5620	0.9583	1.1795	0.0334	0.72131	0.0280	0.6443	1.6704	0.5864	0.6723	-0.0719	#NUM!	0.5131	-0.5337	0.5131		
5	197.0	0.6464	0.9583	1.3843	0.0392	0.72131	0.0280	0.7053	1.9605	0.6745	0.7360	-0.0475	#NUM!	0.6732	-0.3937	0.6732		
6	219.7	0.7208	0.9583	1.6068	0.0455	0.72131	0.0280	0.7685	2.2756	0.7521	0.8019	-0.0358	#NUM!	0.8222	-0.2848	0.8222		
7	241.2	0.7913	0.9583	1.8999	0.0538	0.72131	0.0280	0.8481	2.6907	0.8257	0.8850	-0.0453	#NUM!	0.9898	-0.1915	0.9898		
8	261.5	0.8579	0.9583	2.1719	0.0615	0.72131	0.0280	0.9196	3.0757	0.8952	0.9595	-0.0503	#NUM!	1.1235	-0.1107	1.1235		
9*	375.4	1.2316	0.9583	3.4608	0.0980	0.72131	0.0280		4.9012	1.2852							1.2992	24.0217
10*	428.2	1.4050	0.9583	3.7045	0.1049	0.72131	0.0280		5.2463	1.4661							1.4801	27.5234
11*	487.7	1.6001	0.9583	3.8952	0.1103	0.72131	0.0280		5.5163	1.6696							1.6836	30.4300
12*	561.8	1.8431	0.9583	4.1424	0.1173	0.72131	0.0280		5.8664	1.9232							1.9372	34.4150

* barrel was full at this point

Date: 11/6/1997
Run#: 15
Reducer Number: 10 Inlet No. 13

Barrel Slope: 2.0 percent
Inlet Diameter: 11.5 inches/10.0 inches

Culvert Barrel Diameter: 10.0 inches
Barrel Cross Sectional Area: 0.54542 ft^2
Calculated Barrel Diameter: (10.0 inches = 0.8333 ft)
Barrel Length: 12 feet

Unsubmerged Inlet Control Design Constants

Form (1)
K = 1.0000
M = 0.0000

Form (2)
K = 0.467
M = 0.558

Submerged Inlet Control Design Constants

c = 0.025
Y = 0.648

Definitions:

H_W = Headwater depth above inlet control section invert, ft
D = Interior height of culvert barrel, ft
H_C = Specific head at critical depth ($d + V^2/2g$), ft
Q = Discharge, ft^3/s
A = Full cross sectional area of culvert barrel, ft^2
S = Culvert barrel slope, ft/ft
K,M = Constants

Notes:

1). For mitered inlets use +0.7S instead of -0.5S as the slope correction factor
2). For Unsubmerged Flow, $H_W/D<1.2$
3). For Submerged Flow, $H_W/D>1.5$
4). For Unsubmerged Flow, $Q/AD^{0.5}<3.5$
5). For Submerged Flow, $Q/AD^{0.5}$-4.0

												Unsubmerged					Submerged	
													Form 1 Data		Form 2 Data			
													Y	X	Y	X	Y	X
													$\ln(H_w/D-H_c/D+0.5S)$					
Reading Number	H_w (mm)	H_w (ft)	D (ft)	Q (ft^3/s)	Q (m^3/s)	A (ft^2)	S (ft/ft)	H_c (ft)	$Q/(AD^{0.5})$	H_w/D	H_c/D	$H_w/D-H_c/D+0.5S$		$\ln(Q/(AD^{0.5}))$	$\ln(H_w/D)$	$\ln(Q/(AD^{0.5}))$	$H_w/D+0.5S$	$(Q/(AD^{0.5}))^2$
0	0.0	0.0000	0.9583	0.0000	0.0000	0.72131	0.0200	0.0000	0.0000	0.0000	0.0000							
1	75.5	0.2476	0.9583	0.2295	0.0065	0.72131	0.0200	0.2687	0.3251	0.2584	0.2804	-0.0120	#NUM!	-1.1237	-1.3534	-1.1237		
2	110.4	0.3621	0.9583	0.5015	0.0142	0.72131	0.0200	0.4047	0.7102	0.3778	0.4223	-0.0345	#NUM!	-0.3422	-0.9733	-0.3422		
3	148.7	0.4878	0.9583	0.8546	0.0242	0.72131	0.0200	0.5392	1.2103	0.5090	0.5626	-0.0437	#NUM!	0.1909	-0.6754	0.1909		
4	177.2	0.5814	0.9583	1.2395	0.0351	0.72131	0.0200	0.6625	1.7554	0.6066	0.6914	-0.0747	#NUM!	0.5627	-0.4998	0.5627		
5	202.1	0.6631	0.9583	1.4550	0.0412	0.72131	0.0200	0.7257	2.0605	0.6919	0.7572	-0.0554	#NUM!	0.7229	-0.3683	0.7229		
6	225.7	0.7404	0.9583	1.6986	0.0481	0.72131	0.0200	0.7938	2.4056	0.7726	0.8283	-0.0457	#NUM!	0.8778	-0.2580	0.8778		
7	244.3	0.8015	0.9583	1.9600	0.0555	0.72131	0.0200	0.8641	2.7757	0.8364	0.9016	-0.0553	#NUM!	1.0209	-0.1787	1.0209		
8	265.3	0.8703	0.9583	2.2425	0.0635	0.72131	0.0200	0.9378	3.1758	0.9081	0.9786	-0.0605	#NUM!	1.1556	-0.0964	1.1556		
9	280.1	0.9191	0.9583	2.4968	0.0707	0.72131	0.0200	1.0031	3.5359	0.9590	1.0467	-0.0776	#NUM!	1.2630	-0.0418	1.2630		
10	299.0	0.9811	0.9583	2.7581	0.0781	0.72131	0.0200		3.9060	1.0237							1.0337	15.2564
11	315.5	1.0351	0.9583	2.9876	0.0846	0.72131	0.0200		4.2310	1.0801							1.0901	17.9016
12	342.5	1.1236	0.9583	3.2525	0.0921	0.72131	0.0200		4.6061	1.1724							1.1824	21.2163
13*	402.5	1.3205	0.9583	4.2766	0.1211	0.72131	0.0200		6.0565	1.3780							1.3880	36.6809

* barrel was full at this point

Date: 11/10/1997
Run#: 16
Reducer Number: 10 Inlet No. 13

Barrel Slope: 2.0 percent
Inlet Diameter: 11.5 inches/10.0 inches

Culvert Barrel Diameter: 10.0 inches
Barrel Cross Sectional Area: 0.54542 ft^2
Calculated Barrel Diameter: (10.0 inches = 0.8333 ft)
Barrel Length: 12 feet

Unsubmerged Inlet Control Design Constants

Form (1)
K = 1.0000
M = 0.0000

Form (2)
K = 0.481
M = 0.535

Submerged Inlet Control Design Constants

c = 0.025
Y = 0.656

Definitions:

H_W = Headwater depth above inlet control section invert, ft
D = Interior height of culvert barrel, ft
H_C = Specific head at critical depth ($d + V^2/2g$), ft
Q = Discharge, ft^3/s
A = Full cross sectional area of culvert barrel, ft^2
S = Culvert barrel slope, ft/ft
K,M = Constants

Notes:

1). For mitered inlets use +0.7S instead of -0.5S as the slope correction factor
2). For Unsubmerged Flow, $H_W/D<1.2$
3). For Submerged Flow, $H_W/D>1.5$
4). For Unsubmerged Flow, $Q/AD^{0.5}<3.5$
5). For Submerged Flow, $Q/AD^{0.5}$-4.0

												Unsubmerged					Submerged	
												Form 1 Data			Form 2 Data			
												Y	X		Y	X	Y	X
Reading Number	H_w (mm)	H_w (ft)	D (ft)	Q (ft^3/s)	Q (m^3/s)	A (ft^2)	S (ft/ft)	H_c (ft)	$Q/(AD^{0.5})$	H_w/D	H_c/D	$H_w/D-H_c/D+0.5S$	$\ln(H_w/D-H_c/D+0.5S)$	$\ln(Q/(AD^{0.5}))$	$\ln(H_w/D)$	$\ln(Q/(AD^{0.5}))$	$H_w/D+0.5S$	$(Q/(AD^{0.5}))^2$
0	0.0	0.0000	0.9583	0.0000	0.0000	0.72131	0.0200	0.0000	0.0000	0.0000	0.0000							
1	80.6	0.2645	0.9583	0.2331	0.0066	0.72131	0.0200	0.2708	0.3301	0.2760	0.2826	0.0035	-5.6675	-1.1084	-1.2872	-1.1084		
2	109.9	0.3607	0.9583	0.4662	0.0132	0.72131	0.0200	0.3894	0.6602	0.3764	0.4063	-0.0199	#NUM!	-0.4153	-0.9772	-0.4153		
3	145.5	0.4774	0.9583	0.7946	0.0225	0.72131	0.0200	0.5182	1.1253	0.4981	0.5407	-0.0326	#NUM!	0.1180	-0.6969	0.1180		
4	171.2	0.5618	0.9583	1.0771	0.0305	0.72131	0.0200	0.6125	1.5254	0.5862	0.6391	-0.0429	#NUM!	0.4222	-0.5341	0.4222		
5	199.0	0.6530	0.9583	1.3561	0.0384	0.72131	0.0200	0.6971	1.9205	0.6814	0.7274	-0.0360	#NUM!	0.6526	-0.3836	0.6526		
6	221.0	0.7251	0.9583	1.6351	0.0463	0.72131	0.0200	0.7763	2.3156	0.7566	0.8101	-0.0435	#NUM!	0.8397	-0.2789	0.8397		
7	241.5	0.7923	0.9583	1.9247	0.0545	0.72131	0.0200	0.8547	2.7257	0.8268	0.8919	-0.0551	#NUM!	1.0027	-0.1902	1.0027		
8	262.6	0.8615	0.9583	2.1930	0.0621	0.72131	0.0200	0.9251	3.1058	0.8990	0.9653	-0.0563	#NUM!	1.1333	-0.1065	1.1333		
9	277.7	0.9110	0.9583	2.4650	0.0698	0.72131	0.0200	0.9950	3.4908	0.9506	1.0382	-0.0776	#NUM!	1.2501	-0.0507	1.2501		
10	297.1	0.9748	0.9583	2.7228	0.0771	0.72131	0.0200		3.8559	1.0172							1.0272	14.8683
11	316.6	1.0387	0.9583	2.9841	0.0845	0.72131	0.0200		4.2260	1.0839							1.0939	17.8593
12	339.5	1.1140	0.9583	3.2136	0.0910	0.72131	0.0200		4.5511	1.1624							1.1724	20.7126
13*	403.0	1.3221	0.9583	4.2590	0.1206	0.72131	0.0200		6.0315	1.3796							1.3896	36.3786

* barrel was full at this point

Date: 11/5/1997
Run#: 17
Reducer Number: 11 Inlet No. 13

Barrel Slope: 2.0 percent
Inlet Diameter: 11.5 inches/10.0 inches

Culvert Barrel Diameter: 10.0 inches
Barrel Cross Sectional Area: 0.54542 ft^2
Calculated Barrel Diameter: (10.0 inches = 0.8333 ft)
Barrel Length: 12 feet

Unsubmerged Inlet Control Design Constants

Form (1)
K = 1.0000
M = 0.0000

Form (2)
K = 0.482
M = 0.529

Submerged Inlet Control Design Constants

c = 0.025
Y = 0.654

Definitions:

H_W = Headwater depth above inlet control secion invert, ft
D = Interior height of culvert barrel, ft
H_C = Specific head at critical depth ($d + V^2/2g$), ft
Q = Discharge, ft^3/s
A = Full cross sectional area of culvert barrel, ft^2
S = Culvert barrel slope, ft/ft
K,M = Constants

Notes:

1). For mitered inlets use +0.7S instead of -0.5S as the slope correction factor
2). For Unsubmerged Flow, $H_W/D<1.2$
3). For Submerged Flow, $H_W/D>1.5$
4). For Unsubmerged Flow, $Q/AD^{0.5}<3.5$
5) For Submerged Flow, $Q/AD^{0.5}$-4.0

												Unsubmerged					Submerged	
													Form 1 Data		Form 2 Data			
													Y	X	Y	X	Y	X
													$\ln(H_w/D-H_c/D+0.5S)$					
Reading Number	H_w (mm)	H_w (ft)	D (ft)	Q (ft^3/s)	Q (m^3/s)	A (ft^2)	S (ft/ft)	H_c (ft)	$Q/(AD^{0.5})$	H_w/D	H_c/D	$H_w/D-H_c/D+0.5S$		$\ln(Q/(AD^{0.5}))$	$\ln(H_w/D)$	$\ln(Q/(AD^{0.5}))$	$H_w/D+0.5S$	$(Q/(AD^{0.5}))^2$
0	0.0	0.0000	0.9583	0.0000	0.0000	0.72131	0.0200	0.0000	0.0000	0.0000	0.0000							
1	75.4	0.2474	0.9583	0.2013	0.0057	0.72131	0.0200	0.2510	0.2851	0.2581	0.2619	0.0062	-5.0817	-1.2550	-1.3543	-1.2550		
2	107.7	0.3532	0.9583	0.4450	0.0126	0.72131	0.0200	0.3799	0.6302	0.3686	0.3964	-0.0178	#NUM!	-0.4618	-0.9981	-0.4618		
3	153.4	0.5034	0.9583	0.8723	0.0247	0.72131	0.0200	0.5452	1.2353	0.5253	0.5690	-0.0337	#NUM!	0.2113	-0.6438	0.2113		
4	179.3	0.5881	0.9583	1.2395	0.0351	0.72131	0.0200	0.6625	1.7554	0.6137	0.6914	-0.0676	#NUM!	0.5627	-0.4882	0.5627		
5	203.4	0.6672	0.9583	1.3949	0.0395	0.72131	0.0200	0.7084	1.9755	0.6962	0.7392	-0.0330	#NUM!	0.6808	-0.3621	0.6808		
6	225.2	0.7390	0.9583	1.6845	0.0477	0.72131	0.0200	0.7899	2.3856	0.7711	0.8243	-0.0432	#NUM!	0.8694	-0.2600	0.8694		
7	244.3	0.8015	0.9583	1.9529	0.0553	0.72131	0.0200	0.8622	2.7657	0.8364	0.8997	-0.0533	#NUM!	1.0173	-0.1787	1.0173		
8	262.6	0.8614	0.9583	2.2354	0.0633	0.72131	0.0200	0.9360	3.1658	0.8989	0.9767	-0.0678	#NUM!	1.1524	-0.1066	1.1524		
9	281.5	0.9237	0.9583	2.4968	0.0707	0.72131	0.0200	1.0031	3.5359	0.9638	1.0467	-0.0728	#NUM!	1.2630	-0.0368	1.2630		
10	298.8	0.9803	0.9583	2.7298	0.0773	0.72131	0.0200		3.8659	1.0229							1.0329	14.9455
11	319.5	1.0482	0.9583	2.9912	0.0847	0.72131	0.0200		4.2360	1.0938							1.1038	17.9440
12	343.7	1.1275	0.9583	3.2384	0.0917	0.72131	0.0200		4.5861	1.1765							1.1865	21.0325
13*	404.8	1.3280	0.9583	4.2660	0.1208	0.72131	0.0200		6.0415	1.3857							1.3957	36.4994

"*" means that the barrel was full at this point.

Date: 12/30/1997
Run#: Headwall #1
Inlet Description: Square Edge w/ Headwall

Barrel Slope: 3.5 percent
Inlet Diameter: 11.5 inches

Culvert Barrel Diameter: 11.5 inches
Barrel Cross Sectional Area: 0.72131 ft^2
Calculated Barrel Diameter: (11.5 inches = 0.95833 ft)
Barrel Length: 12.9 feet

Unsubmerged Inlet Control Design Constants

Form (1)
K = 1.0000
M = 0.0000

Form (2)
K = 0.574
M = 0.543

Submerged Inlet Control Design Constants

c = 0.038
Y = 0.734

Definitions:

H_W = Headwater depth above inlet control section invert, ft
D = Interior height of culvert barrel, ft
H_C = Specific head at critical depth ($d + V^2/2g$), ft
Q = Discharge, ft^3/s
A = Full cross sectional area of culvert barrel, ft^2
S = Culvert barrel slope, ft/ft
K,M = Constants

Notes:

1). For mitered inlets use +0.7S instead of -0.5S as the slope correction factor
2). For Unsubmerged Flow, $H_W/D<1.2$
3). For Submerged Flow, $H_W/D>1.5$
4). For Unsubmerged Flow, $Q/AD^{0.5}<3.5$
5). For Submerged Flow, $Q/AD^{0.5}$-4.0

												Unsubmerged					Submerged	
													Form 1 Data		Form 2 Data			
													Y	X	Y	X	Y	X
													$\ln(H_w/D-H_c/D+0.5S)$					
Reading Number	H_w (mm)	H_w (ft)	D (ft)	Q (ft^3/s)	Q (m^3/s)	A (ft^2)	S (ft/ft)	H_c (ft)	$Q/(AD^{0.5})$	H_w/D	H_c/D	$H_w/D-H_c/D+0.5S$		$\ln(Q/(AD^{0.5}))$	$\ln(H_w/D)$	$\ln(Q/(AD^{0.5}))$	$H_w/D+0.5S$	$(Q/(AD^{0.5}))^2$
0	0.0	0.0000	0.9583	0.0000	0.0000	0.72131	0.0350	0.0000	0.0000	0.0000	0.0000							
1	107.9	0.3541	0.9583	0.2931	0.0083	0.72131	0.0350		0.4151	0.3695	0.0000	0.3870	-0.9493	-0.8792	-0.9956	-0.8792		
2	140.5	0.4611	0.9583	0.5156	0.0146	0.72131	0.0350		0.7302	0.4811	0.0000	0.4986	-0.6959	-0.3145	-0.7317	-0.3145		
3	175.6	0.5761	0.9583	0.7910	0.0224	0.72131	0.0350		1.1203	0.6012	0.0000	0.6187	-0.4802	0.1136	-0.5089	0.1136		
4	210.0	0.6889	0.9583	1.2184	0.0345	0.72131	0.0350		1.7254	0.7188	0.0000	0.7363	-0.3061	0.5455	-0.3301	0.5455		
5	236.6	0.7761	0.9583	1.3561	0.0384	0.72131	0.0350		1.9205	0.8099	0.0000	0.8274	-0.1895	0.6526	-0.2109	0.6526		
6	261.9	0.8594	0.9583	1.6315	0.0462	0.72131	0.0350		2.3106	0.8967	0.0000	0.9142	-0.0897	0.8375	-0.1090	0.8375		
7	289.6	0.9502	0.9583	1.9141	0.0542	0.72131	0.0350		2.7107	0.9916	0.0000	1.0091	0.0090	0.9972	-0.0085	0.9972		
8	316.8	1.0395	0.9583	2.1930	0.0621	0.72131	0.0350		3.1058	1.0847	0.0000	1.1022	0.0973	1.1333	0.0813	1.1333		
9	344.3	1.1295	0.9583	2.4508	0.0694	0.72131	0.0350		3.4708	1.1786	0.0000	1.1961	0.1791	1.2444	0.1643	1.2444		
10	370.2	1.2147	0.9583	2.7051	0.0766	0.72131	0.0350		3.8309	1.2675							1.2850	14.6760
11	405.9	1.3316	0.9583	2.9629	0.0839	0.72131	0.0350		4.1960	1.3895							1.4070	17.6066
12	438.9	1.4399	0.9583	3.2101	0.0909	0.72131	0.0350		4.5461	1.5025							1.5200	20.6671
13	472.3	1.5497	0.9583	3.4361	0.0973	0.72131	0.0350		4.8662	1.6170							1.6345	23.6797
14	508.0	1.6666	0.9583	3.6727	0.1040	0.72131	0.0350		5.2013	1.7390							1.7565	27.0532
15	547.8	1.7972	0.9583	3.9093	0.1107	0.72131	0.0350		5.5363	1.8754							1.8929	30.6511
16	600.1	1.9688	0.9583	4.1919	0.1187	0.72131	0.0350		5.9364	2.0544							2.0719	35.2414

* barrel was full at this point

Date: 12/18/1997
Run#: Benchmark #1
Inlet Number: 12

Barrel Slope: 3.5 percent
Inlet Diameter: 11.5 inches

Culvert Barrel Diameter: 11.5 inches
Barrel Cross Sectional Area: 0.72131 ft^2
Calculated Barrel Diameter: (11.5 inches = 0.95833 ft)
Barrel Length: 12.9 feet

Unsubmerged Inlet Control Design Constants

Form (1)
K = 1.0000
M = 0.0000

Form (2)
K = 0.512
M = 0.562

Submerged Inlet Control Design Constants

c = 0.0000
Y = 0.0000

Definitions:

H_W = Headwater depth above inlet control section invert, ft
D = Interior height of culvert barrel, ft
H_C = Specific head at critical depth ($d + V^2/2g$), ft
Q = Discharge, ft^3/s
A = Full cross sectional area of culvert barrel, ft^2
S = Culvert barrel slope, ft/ft
K,M = Constants

Notes:

1). For mitered inlets use +0.7S instead of -0.5S as the slope correction factor
2). For Unsubmerged Flow, $H_W/D<1.2$
3). For Submerged Flow, $H_W/D>1.5$
4). For Unsubmerged Flow, $Q/AD^{0.5}<3.5$
5). For Submerged Flow, $Q/AD^{0.5}$-4.0

												Unsubmerged					Submerged	
													Form 1 Data		Form 2 Data			
													Y	X	Y	X	Y	X
Reading Number	H_w (mm)	H_w (ft)	D (ft)	Q (ft^3/s)	Q (m^3/s)	A (ft^2)	S (ft/ft)	H_c (ft)	$Q/(AD^{0.5})$	H_w/D	H_c/D	$H_w/D-H_c/D+0.5S$	$\ln(H_w/D-H_c/D+0.5S)$	$\ln(Q/(AD^{0.5}))$	$\ln(H_w/D)$	$\ln(Q/(AD^{0.5}))$	$H_w/D+0.5S$	$(Q/(AD^{0.5}))^2$
0	0.0	0.0000	0.9583	0.0000	0.0000	0.72131	0.0350	0.0000	0.0000	0.0000	0.0000							
1	73.3	0.2406	0.9583	0.1907	0.0054	0.72131	0.0350		0.2701	0.2511	0.0000	0.2686	-1.3147	-1.3091	-1.3821	-1.3091		
2	115.9	0.3801	0.9583	0.4626	0.0131	0.72131	0.0350		0.6552	0.3967	0.0000	0.4142	-0.8815	-0.4229	-0.9247	-0.4229		
3	159.3	0.5227	0.9583	0.7840	0.0222	0.72131	0.0350		1.1103	0.5455	0.0000	0.5630	-0.5745	0.1046	-0.6061	0.1046		
4	192.4	0.6313	0.9583	1.2360	0.0350	0.72131	0.0350		1.7504	0.6588	0.0000	0.6763	-0.3911	0.5599	-0.4173	0.5599		
5	218.9	0.7182	0.9583	1.3879	0.0393	0.72131	0.0350		1.9655	0.7494	0.0000	0.7669	-0.2654	0.6757	-0.2885	0.6757		
6	243.6	0.7991	0.9583	1.6598	0.0470	0.72131	0.0350		2.3506	0.8338	0.0000	0.8513	-0.1609	0.8547	-0.1817	0.8547		
7	266.4	0.8741	0.9583	1.9317	0.0547	0.72131	0.0350		2.7357	0.9121	0.0000	0.9296	-0.0730	1.0064	-0.0920	1.0064		
8	288.6	0.9469	0.9583	2.2284	0.0631	0.72131	0.0350		3.1558	0.9880	0.0000	1.0055	0.0055	1.1492	-0.0121	1.1492		
9	309.9	1.0168	0.9583	2.4862	0.0704	0.72131	0.0350		3.5209	1.0611	0.0000	1.0786	0.0756	1.2587	0.0593	1.2587		
10	332.1	1.0897	0.9583	2.7192	0.0770	0.72131	0.0350		3.8509	1.1371							1.1546	14.8297
11	358.7	1.1767	0.9583	2.9594	0.0838	0.72131	0.0350		4.1910	1.2279							1.2454	17.5646

"*" means that the barrel was full at this point.

Date: 12/24/1997
Run#: Benchmark #3
Inlet Number: 13

Barrel Slope: 3.5 percent
Inlet Diameter: 11.5 inches

Culvert Barrel Diameter: 11.5 inches
Barrel Cross Sectional Area: 0.72131 ft^2
Calculated Barrel Diameter: (11.5 inches = 0.95833 ft)
Barrel Length: 12.9 feet

Unsubmerged Inlet Control Design Constants

Form (1)
K = 1.0000
M = 0.0000

Form (2)
K = 0.499
M = 0.566

Submerged Inlet Control Design Constants

c = 0.015
Y = 0.924

Definitions:

H_W = Headwater depth above inlet control section invert, ft
D = Interior height of culvert barrel, ft
H_C = Specific head at critical depth ($d + V^2/2g$), ft
Q = Discharge, ft^3/s
A = Full cross sectional area of culvert barrel, ft^2
S = Culvert barrel slope, ft/ft
K,M = Constants

Notes:

1). For mitered inlets use +0.7S instead of -0.5S as the slope correction factor
2). For Unsubmerged Flow, $H_W/D<1.2$
3). For Submerged Flow, $H_W/D>1.5$
4). For Unsubmerged Flow, $Q/AD^{0.5}<3.5$
5). For Submerged Flow, $Q/AD^{0.5}$-4.0

												Unsubmerged					Submerged	
												Form 1 Data			Form 2 Data			
												Y	X		Y	X	Y	X
												$\ln(H_w/D-H_c/D+0.5S)$						
Reading Number	H_w (mm)	H_w (ft)	D (ft)	Q (ft^3/s)	Q (m^3/s)	A (ft^2)	S (ft/ft)	H_c (ft)	$Q/(AD^{0.5})$	H_w/D	H_c/D	$H_w/D-H_c/D+0.5S$		$\ln(Q/(AD^{0.5}))$	$\ln(H_w/D)$	$\ln(Q/(AD^{0.5}))$	$H_w/D+0.5S$	$(Q/(AD^{0.5}))^2$
0	0.0	0.0000	0.9583	0.0000	0.0000	0.72131	0.0350	0.0000	0.0000	0.0000	0.0000							
1	93.3	0.3060	0.9583	0.2755	0.0078	0.72131	0.0350		0.3901	0.3193	0.0000	0.3368	-1.0883	-0.9414	-1.1416	-0.9414		
2	119.3	0.3913	0.9583	0.6215	0.0176	0.72131	0.0350		0.8802	0.4083	0.0000	0.4258	-0.8538	-0.1276	-0.8957	-0.1276		
3	155.2	0.5091	0.9583	0.7840	0.0222	0.72131	0.0350		1.1103	0.5312	0.0000	0.5487	-0.6002	0.1046	-0.6326	0.1046		
4	186.0	0.6103	0.9583	1.1724	0.0332	0.72131	0.0350		1.6604	0.6369	0.0000	0.6544	-0.4241	0.5071	-0.4512	0.5071		
5	213.6	0.7008	0.9583	1.3561	0.0384	0.72131	0.0350		1.9205	0.7313	0.0000	0.7488	-0.2893	0.6526	-0.3130	0.6526		
6	238.7	0.7831	0.9583	1.6457	0.0466	0.72131	0.0350		2.3306	0.8172	0.0000	0.8347	-0.1807	0.8461	-0.2019	0.8461		
7	262.9	0.8624	0.9583	1.9388	0.0549	0.72131	0.0350		2.7457	0.8999	0.0000	0.9174	-0.0862	1.0100	-0.1054	1.0100		
8	281.3	0.9228	0.9583	2.1824	0.0618	0.72131	0.0350		3.0908	0.9629	0.0000	0.9804	-0.0198	1.1284	-0.0378	1.1284		
9	303.4	0.9955	0.9583	2.4720	0.0700	0.72131	0.0350		3.5009	1.0388	0.0000	1.0563	0.0548	1.2530	0.0381	1.2530		
10	324.5	1.0646	0.9583	2.7086	0.0767	0.72131	0.0350		3.8359	1.1109							1.1284	14.7144
11	344.8	1.1311	0.9583	2.9558	0.0837	0.72131	0.0350		4.1860	1.1803							1.1978	17.5227
12	352.2	1.1556	0.9583	3.2136	0.0910	0.72131	0.0350		4.5511	1.2059							1.2234	20.7126
13	367.5	1.2058	0.9583	3.4750	0.0984	0.72131	0.0350		4.9212	1.2582							1.2757	24.2182

* barrel was full at this point

Inlet Diameter: 11.5 inches

Culvert Barrel Diameter: 11.5 inches
Barrel Cross Sectional Area: 0.72131 ft^2
Calculated Barrel Diameter: (11.5 inches = 0.95833 ft)
Barrel Length: 12.9 feet

Unsubmerged Inlet Control Design Constants

Form (1)
K = 1.0000
M = 0.0000

Form (2)
K = 0.491
M = 0.564

Submerged Inlet Control Design Constants

c = 0.019
Y = 0.830

Definitions:

H_W = Headwater depth above inlet control section invert, ft
D = Interior height of culvert barrel, ft
H_c = Specific head at critical depth ($d + V^2/2g$), ft
Q = Discharge, ft^3/s
A = Full cross sectional area of culvert barrel, ft^2
S = Culvert barrel slope, ft/ft
K,M = Constants

Notes:

1). For mitered inlets use +0.7S instead of -0.5S as the slope correction factor
2). For Unsubmerged Flow, $H_W/D<1.2$
3). For Submerged Flow, $H_W/D>1.5$
4). For Unsubmerged Flow, $Q/AD^{0.5}$ <3.5
5). For Submerged Flow, $Q/AD^{0.5}$-4.0

												Unsubmerged					Submerged	
												Form 1 Data			Form 2 Data			
												Y	X		Y	X	Y	X
												$\ln(H_w/D-H_c/D+0.5S)$						
Reading Number	H_w (mm)	H_w (ft)	D (ft)	Q (ft^3/s)	Q (m^3/s)	A (ft^2)	S (ft/ft)	H_c (ft)	$Q/(AD^{0.5})$	H_w/D	H_c/D	$H_w/D-H_c/D+0.5S$		$\ln(Q/(AD^{0.5}))$	$\ln(H_w/D)$	$\ln(Q/(AD^{0.5}))$	$H_w/D+0.5S$	$(Q/(AD^{0.5}))^2$
0	0.0	0.0000	0.9583	0.0000	0.0000	0.72131	0.0500	0.0000	0.0000	0.0000	0.0000							
1	87.6	0.2875	0.9583	0.2860	0.0081	0.72131	0.0500		0.4051	0.3000	0.0000	0.3250	-1.1239	-0.9036	-1.2039	-0.9036		
2	121.8	0.3995	0.9583	0.5438	0.0154	0.72131	0.0500		0.7702	0.4169	0.0000	0.4419	-0.8167	-0.2611	-0.8750	-0.2611		
3	152.1	0.4990	0.9583	0.7946	0.0225	0.72131	0.0500		1.1253	0.5207	0.0000	0.5457	-0.6057	0.1180	-0.6526	0.1180		
4	183.9	0.6035	0.9583	1.1018	0.0312	0.72131	0.0500		1.5604	0.6297	0.0000	0.6547	-0.4236	0.4449	-0.4625	0.4449		
5	209.6	0.6877	0.9583	1.3914	0.0394	0.72131	0.0500		1.9705	0.7176	0.0000	0.7426	-0.2976	0.6783	-0.3319	0.6783		
6	234.1	0.7682	0.9583	1.6845	0.0477	0.72131	0.0500		2.3856	0.8016	0.0000	0.8266	-0.1905	0.8694	-0.2212	0.8694		
7	253.8	0.8328	0.9583	1.9458	0.0551	0.72131	0.0500		2.7557	0.8690	0.0000	0.8940	-0.1121	1.0137	-0.1404	1.0137		
8	272.7	0.8947	0.9583	2.2142	0.0627	0.72131	0.0500		3.1358	0.9336	0.0000	0.9586	-0.0423	1.1429	-0.0687	1.1429		
9	295.7	0.9700	0.9583	2.4897	0.0705	0.72131	0.0500		3.5259	1.0122	0.0000	1.0372	0.0365	1.2601	0.0121	1.2601		
10	316.9	1.0396	0.9583	2.7475	0.0778	0.72131	0.0500		3.8909	1.0848							1.1098	15.1395
11	338.4	1.1103	0.9583	3.0053	0.0851	0.72131	0.0500		4.2560	1.1586							1.1836	18.1138
12	349.6	1.1471	0.9583	3.2419	0.0918	0.72131	0.0500		4.5911	1.1969							1.2219	21.0784

* barrel was full at this point.

		Reading #	Q (cms)	Headbox EGL	Projected EGL	He (mm)	Ke = $2g/V^2$+He	Average He	Average Ke
Date:	10/31/1997								
Run#:	19								
Data Collected By:	CRW	1*	0.008	1014.1	1012.1	2.03	0.86		
Inlet Description:	# 13	2*	0.017	1036.5	1034.7	1.72	0.16	25.87	0.17
		3*	0.028	1074.2	1070.9	3.30	0.12		
Barrel Slope:	2.80%	4*	0.037	1114.6	1109.1	5.56	0.12	**Average He (no f)**	**Average Ke**
Inlet Diameter:	11.5 inches	5	0.043	1153.6	1142.4	11.17	0.17		
Barrel Length:	12 feet	6	0.054	1220.4	1201.1	19.31	0.18		
Barrel Area:	0.0377	7	0.065	1300.4	1273.6	26.78	0.17	19.76	0.13
Culvert Barrel Dia:	219.1 mm = 8.625 in.	8	0.074	1370.0	1336.2	33.72	0.17		
Reducer # :	1	9	0.084	1447.9	1409.5	38.39	0.15		
Reducer length :	34.0 inches								

* not included in the average

Reading #	Q (cms)	He total (mm)	Hf elbow (mm)	Hf reducer (mm)	He (no f) (mm)	Ke (no f)= $2g/V^2$+He
5	0.043	11.17	0.65	2.16	8.36	0.12
6	0.054	19.31	0.95	3.15	15.21	0.14
7	0.065	26.78	1.50	4.97	20.32	0.13
8	0.074	33.72	1.79	5.95	25.98	0.13
9	0.084	38.39	2.19	7.25	28.95	0.12

Reading #	Port #	HGL (mm)	Q (m^3/s)	A (m^2)	V=Q/A (m/s)	$V^2/2g$ (mm)	Cum. Hor. Distance (mm)	Cum. Hor. Dist. w/out elbow + red (mm)	EGL HGL+$V^2/2g$ (ft)
1	1	1014.6					0.0		1014.6
	2	1014.1					0.0		1014.1
	3	1013.6					0.0		1013.6
	3.5	1012.2	0.0081	0.067	0.121	0.745	63.4		1012.9
	4	1012.1	0.0081	0.067	0.121	0.745	149.4		1012.8
	5	1012.4	0.0081	0.067	0.121	0.745	292.6		1013.1
	6	1012.1	0.0081	0.067	0.121	0.745	433.4		1012.8
	7	1011.8	0.0081	0.061	0.132	0.890	674.8		1012.7
	7.5	1011.0	0.0081	0.051	0.158	1.271	960.6		1012.3
	8	1010.6	0.0081	0.042	0.193	1.896	1252.7		1012.5
	9	1009.6	0.0081	0.038	0.215	2.353	2008.2	609.6	1012.0
	10	1009.0	0.0081	0.038	0.215	2.353	2617.8	1219.2	1011.4
	11	1008.4	0.0081	0.038	0.215	2.353	3176.6	1778.0	1010.8
	12	1008.5	0.0081	0.038	0.215	2.353	3837.0	2438.4	1010.9
	13	1008.2	0.0081	0.038	0.215	2.353	4446.6	3048.0	1010.6

Reading #	Port #	HGL (mm)	Q (m^3/s)	A (m^2)	V=Q/A (m/s)	$V^2/2g$ (mm)	Cum. Hor. Distance (mm)	Cum. Hor. Dist. w/out elbow + red (mm)	EGL HGL+$V^2/2g$ (mm)
7	1	1298.5					0.0		1298.5
	2	1301.1					0.0		1301.1
	3	1301.5					0.0		1301.5
	3.5	1226.3	0.0654	0.067	0.976	48.6	63.4		1274.9
	4	1228	0.0654	0.067	0.976	48.6	149.4		1276.6
	5	1249.9	0.0654	0.067	0.976	48.6	292.6		1298.5
	6	1250.3	0.0654	0.067	0.976	48.6	433.4		1298.9
	7	1230.9	0.0654	0.061	1.067	58.0	674.8		1288.9
	7.5	1193.7	0.0654	0.051	1.275	82.8	960.6		1276.5
	8	1149.1	0.0654	0.042	1.557	123.6	1252.7		1272.7
	9	1113.4	0.0654	0.038	1.735	153.4	2008.2	609.6	1266.8
	10	1099.5	0.0654	0.038	1.735	153.4	2617.8	1219.2	1252.9
	11	1103.0	0.0654	0.038	1.735	153.4	3176.6	1778.0	1256.4
	12	1087.6	0.0654	0.038	1.735	153.4	3837.0	2438.4	1241.0
	13	1080.3	0.0654	0.038	1.735	153.4	4446.6	3048.0	1233.7

Reading #	Port #	HGL (mm)	Q (m^3/s)	A (m^2)	V=Q/A (m/s)	$V^2/2g$ (mm)	Cum. Hor. Distance (mm)	Cum. Hor. Dist. w/out elbow + red (mm)	EGL HGL+$V^2/2g$ (ft)
2	1	1036.6					0.0		1036.6
	2	1036.1					0.0		1036.1
	3	1036.7					0.0		1036.7
	3.5	1032.3	0.0171	0.067	0.255	3.320	63.4		1035.6
	4	1031.2	0.0171	0.067	0.255	3.320	149.4		1034.5
	5	1033.6	0.0171	0.067	0.255	3.320	292.6		1036.9
	6	1032.8	0.0171	0.067	0.255	3.320	433.4		1036.1
	7	1031.2	0.0171	0.061	0.279	3.966	674.8		1035.2
	7.5	1028.2	0.0171	0.051	0.333	5.663	960.6		1033.9
	8	1026.2	0.0171	0.042	0.407	8.449	1252.7		1034.6
	9	1023.8	0.0171	0.038	0.454	10.486	2008.2	609.6	1034.3
	10	1022.6	0.0171	0.038	0.454	10.486	2617.8	1219.2	1033.1
	11	1022.3	0.0171	0.038	0.454	10.486	3176.6	1778.0	1032.8
	12	1021.7	0.0171	0.038	0.454	10.486	3837.0	2438.4	1032.2
	13	1020.9	0.0171	0.038	0.454	10.486	4446.6	3048.0	1031.4

Reading #	Port #	HGL (mm)	Q (m^3/s)	A (m^2)	V=Q/A (m/s)	$V^2/2g$ (mm)	Cum. Hor. Distance (mm)	Cum. Hor. Dist. w/out elbow + red (mm)	EGL HGL+$V^2/2g$ (mm)
8	1	1367.5					0.0		1367.5
	2	1370.8					0.0		1370.8
	3	1371.6					0.0		1371.6
	3.5	1275	0.0744	0.067	1.110	62.8	63.4		1337.8
	4	1277.9	0.0744	0.067	1.110	62.8	149.4		1340.7
	5	1304.7	0.0744	0.067	1.110	62.8	292.6		1367.5
	6	1305.7	0.0744	0.067	1.110	62.8	433.4		1368.5
	7	1279.7	0.0744	0.061	1.214	75.1	674.8		1354.8
	7.5	1230.3	0.0744	0.051	1.450	107.2	960.6		1337.5
	8	1172.5	0.0744	0.042	1.771	159.9	1252.7		1332.4
	9	1129.4	0.0744	0.038	1.973	198.5	2008.2	609.6	1327.9
	10	1112.0	0.0744	0.038	1.973	198.5	2617.8	1219.2	1310.5
	11	1118.4	0.0744	0.038	1.973	198.5	3176.6	1778.0	1316.9
	12	1099.8	0.0744	0.038	1.973	198.5	3837.0	2438.4	1298.3
	13	1088.8	0.0744	0.038	1.973	198.5	4446.6	3048.0	1287.3

Reading #	Port #	HGL (mm)	Q (m^3/s)	A (m^2)	V=Q/A (m/s)	$V^2/2g$ (mm)	Cum. Hor. Distance (mm)	Cum. Hor. Dist. w/out elbow + red (mm)	EGL HGL+$V^2/2g$ (ft)
3	1	1074.3					0.0		1074.3
	2	1074					0.0		1074.0
	3	1074.3					0.0		1074.3
	3.5	1061.7	0.0275	0.067	0.410	8.587	63.4		1070.3
	4	1062	0.0275	0.067	0.410	8.587	149.4		1070.6
	5	1065.8	0.0275	0.067	0.410	8.587	292.6		1074.4
	6	1066.1	0.0275	0.067	0.410	8.587	433.4		1074.7
	7	1062.9	0.0275	0.061	0.449	10.258	674.8		1073.2
	7.5	1055.9	0.0275	0.051	0.536	14.646	960.6		1070.5
	8	1048.8	0.0275	0.042	0.655	21.851	1252.7		1070.7
	9	1042.6	0.0275	0.038	0.729	27.120	2008.2	609.6	1069.7
	10	1039.6	0.0275	0.038	0.729	27.120	2617.8	1219.2	1066.7
	11	1040.5	0.0275	0.038	0.729	27.120	3176.6	1778.0	1067.6
	12	1037.6	0.0275	0.038	0.729	27.120	3837.0	2438.4	1064.7
	13	1036.1	0.0275	0.038	0.729	27.120	4446.6	3048.0	1063.2

Reading #	Port #	HGL (mm)	Q (m^3/s)	A (m^2)	V=Q/A (m/s)	$V^2/2g$ (mm)	Cum. Hor. Distance (mm)	Cum. Hor. Dist. w/out elbow + red (mm)	EGL HGL+$V^2/2g$ (mm)
9	1	1445.8					0.0		1445.8
	2	1448.5					0.0		1448.5
	3	1449.4					0.0		1449.4
	3.5	1327.2	0.0836	0.067	1.248	79.4	63.4		1406.6
	4	1328	0.0836	0.067	1.248	79.4	149.4		1407.4
	5	1365.8	0.0836	0.067	1.248	79.4	292.6		1445.2
	6	1367.9	0.0836	0.067	1.248	79.4	433.4		1447.3
	7	1332.4	0.0836	0.061	1.364	94.8	674.8		1427.2
	7.5	1270.3	0.0836	0.051	1.630	135.4	960.6		1405.7
	8	1201.5	0.0836	0.042	1.990	201.9	1252.7		1403.4
	9	1147.8	0.0836	0.038	2.218	250.6	2008.2	609.6	1398.4
	10	1128.0	0.0836	0.038	2.218	250.6	2617.8	1219.2	1378.6
	11	1136.5	0.0836	0.038	2.218	250.6	3176.6	1778.0	1387.1
	12	1112.2	0.0836	0.038	2.218	250.6	3837.0	2438.4	1362.8
	13	1098.8	0.0836	0.038	2.218	250.6	4446.6	3048.0	1349.4

Reading #	Port #	HGL (mm)	Q (m^3/s)	A (m^2)	V=Q/A (m/s)	$V^2/2g$ (mm)	Cum. Hor. Distance (mm)	Cum. Hor. Dist. w/out elbow + red (mm)	EGL HGL+$V^2/2g$ (ft)
4	1	1114.3					0.0		1114.3
	2	1114.7					0.0		1114.7
	3	1114.9					0.0		1114.9
	3.5	1092.2	0.0365	0.067	0.545	15.126	63.4		1107.3
	4	1092.3	0.0365	0.067	0.545	15.126	149.4		1107.4
	5	1100.2	0.0365	0.067	0.545	15.126	292.6		1115.3
	6	1100.2	0.0365	0.067	0.545	15.126	433.4		1115.3
	7	1094.0	0.0365	0.061	0.595	18.070	674.8		1112.1
	7.5	1082.2	0.0365	0.051	0.712	25.802	960.6		1108.0
	8	1068.9	0.0365	0.042	0.869	38.494	1252.7		1107.4
	9	1059.2	0.0365	0.038	0.968	47.775	2008.2	609.6	1107.0
	10	1055.0	0.0365	0.038	0.968	47.775	2617.8	1219.2	1102.8
	11	1054.9	0.0365	0.038	0.968	47.775	3176.6	1778.0	1102.7
	12	1051.6	0.0365	0.038	0.968	47.775	3837.0	2438.4	1099.4
	13	1048.4	0.0365	0.038	0.968	47.775	4446.6	3048.0	1096.2

Reading #	Port #	HGL (mm)	Q (m^3/s)	A (m^2)	V=Q/A (m/s)	$V^2/2g$ (mm)	Cum. Hor. Distance (mm)	Dist. w/out elbow + red (mm)	EGL $HGL+V^2/2g$ (ft)
5	1	1153.3					0.0		1153.3
	2	1153.7					0.0		1153.7
	3	1153.8					0.0		1153.8
	3.5	1120.2	0.0433	0.067	0.646	21.288	63.4		1141.5
	4	1119.9	0.0433	0.067	0.646	21.288	149.4		1141.2
	5	1130.9	0.0433	0.067	0.646	21.288	292.6		1152.2
	6	1132.2	0.0433	0.067	0.646	21.288	433.4		1153.5
	7	1123.0	0.0433	0.061	0.706	25.431	674.8		1148.4
	7.5	1105.7	0.0433	0.051	0.844	36.311	960.6		1142.0
	8	1086.3	0.0433	0.042	1.031	54.172	1252.7		1140.5
	9	1072.0	0.0433	0.038	1.149	67.235	2008.2	609.6	1139.2
	10	1066.4	0.0433	0.038	1.149	67.235	2617.8	1219.2	1133.6
	11	1067.7	0.0433	0.038	1.149	67.235	3176.6	1778.0	1134.9
	12	1061.5	0.0433	0.038	1.149	67.235	3837.0	2438.4	1128.7
	13	1057.5	0.0433	0.038	1.149	67.235	4446.6	3048.0	1124.7

Reading #	Port #	HGL (mm)	Q (m^3/s)	A (m^2)	V=Q/A (m/s)	$V^2/2g$ (mm)	Cum. Hor. Distance (mm)	Cum. Hor. Dist. w/out elbow + red (mm)	EGL $HGL+V^2/2g$ (mm)
6	1	1218.4					0.0		1218.4
	2	1220.7					0.0		1220.7
	3	1222.1					0.0		1222.1
	3.5	1168.6	0.0541	0.067	0.807	33.231	63.4		1201.8
	4	1170.2	0.0541	0.067	0.807	33.231	149.4		1203.4
	5	1186.9	0.0541	0.067	0.807	33.231	292.6		1220.1
	6	1188.9	0.0541	0.067	0.807	33.231	433.4		1222.1
	7	1173.6	0.0541	0.061	0.883	39.699	674.8		1213.3
	7.5	1146.9	0.0541	0.051	1.055	56.684	960.6		1203.6
	8	1116.4	0.0541	0.042	1.288	84.566	1252.7		1201.0
	9	1091.1	0.0541	0.038	1.435	104.957	2008.2	609.6	1196.1
	10	1083.3	0.0541	0.038	1.435	104.957	2617.8	1219.2	1188.3
	11	1086.2	0.0541	0.038	1.435	104.957	3176.6	1778.0	1191.2
	12	1075.5	0.0541	0.038	1.435	104.957	3837.0	2438.4	1180.5
	13	1070.3	0.0541	0.038	1.435	104.957	4446.6	3048.0	1175.3

		Reading #	Q (cms)	Headbox EGL	Projected EGL	He (mm)	Ke = $2g/V^2$-He	Average He	Average Ke
Date:	10/15/1997								
Run#:	20								
Data Collected By:	CRW	1*	0.007	929.4	926.8	2.58	1.70		
Inlet Description:	# 13	2*	0.016	951.6	950.5	1.10	0.12	23.57	0.16
		3*	0.032	984.1	996.4	-12.35	-0.33		
Barrel Slope:	1.00%	4*	0.038	1021.2	1026.2	-5.02	-0.10	**Average He (no f)**	**Average Ke**
Inlet Diameter:	11.5 inches	5	0.042	1062.9	1052.8	10.04	0.16		
Barrel Length:	12 feet	6	0.053	1128.9	1112.4	16.48	0.16		
Barrel Area:	0.0377	7	0.064	1207.4	1183.8	23.54	0.16	19.05	0.13
Culvert Barrel Dia:	219.1 mm = 8.625 inches	8	0.073	1277.2	1247.3	29.93	0.16		
Reducer # :	2	9	0.083	1356.0	1318.1	37.85	0.15		
Reducer length :	23.0 inches	10*	0.093	1444.2	1403.9	40.26	0.13		

Note = Readings with a " * " were not included in the average

Reading #	Q (cms)	He total (mm)	Hf elbow (mm)	Hf reducer (mm)	He (no f) (mm)	Ke (no f)= $2g/V^2$-He
5	0.042	10.04	0.62	1.37	8.05	0.13
6	0.053	16.48	1.00	2.22	13.26	0.13
7	0.064	23.54	1.49	3.29	18.76	0.13
8	0.073	29.93	1.83	4.04	24.06	0.12
9	0.083	37.85	2.11	4.66	31.09	0.13

Reading #	Port #	HGL (mm)	Q (m^3/s)	A (m^2)	V=Q/A (m/s)	$V^2/2g$ (mm)	Cum. Hor. Distance (mm)	Cum. Hor. Dist. w/out elbow + red (mm)	EGL HGL+$V^2/2g$ (ft)
1	1	929.9					0.0		929.9
	2	929.3					0.0		929.3
	3	928.9					0.0		928.9
	3.5	927.5	0.007	0.067	0.097	0.5	63.4		928.0
	4	927.4	0.007	0.067	0.097	0.5	149.4		927.9
	5	927.5	0.007	0.067	0.097	0.5	292.6		928.0
	6	927.2	0.007	0.067	0.097	0.5	433.4		927.7
	7	926.7	0.007	0.057	0.114	0.7	706.5		927.4
	8	926.1	0.007	0.046	0.142	1.0	928.7		927.1
	9	925.2	0.007	0.038	0.172	1.5	1716.1	609.6	926.7
	10	924.7	0.007	0.038	0.172	1.5	2325.7	1219.2	926.2
	11	924.5	0.007	0.038	0.172	1.5	2884.5	1778.0	926.0
	12	924.5	0.007	0.038	0.172	1.5	3544.9	2438.4	926.0
	13	924.2	0.007	0.038	0.172	1.5	4154.5	3048.0	925.7

Reading #	Port #	HGL (mm)	Q (m^3/s)	A (m^2)	V=Q/A (m/s)	$V^2/2g$ (mm)	Cum. Hor. Distance (mm)	Cum. Hor. Dist. w/out elbow + red (mm)	EGL HGL+$V^2/2g$ (mm)
7	1	1205.8					0.0		1205.8
	2	1208.3					0.0		1208.3
	3	1208					0.0		1208.0
	3.5	1137.8	0.064	0.067	0.960	46.9	63.4		1184.7
	4	1138.7	0.064	0.067	0.960	46.9	149.4		1185.6
	5	1159.2	0.064	0.067	0.960	46.9	292.6		1206.1
	6	1161.2	0.064	0.067	0.960	46.9	433.4		1208.1
	7	1124.4	0.064	0.057	1.130	65.1	706.5		1189.5
	8	1096.8	0.064	0.046	1.407	100.9	928.7		1197.7
	9	1028.7	0.064	0.038	1.706	148.3	1716.1	609.6	1177.0
	10	1015.2	0.064	0.038	1.706	148.3	2325.7	1219.2	1163.5
	11	1018.1	0.064	0.038	1.706	148.3	2884.5	1778.0	1166.4
	12	1003.8	0.064	0.038	1.706	148.3	3544.9	2438.4	1152.1
	13	995.6	0.064	0.038	1.706	148.3	4154.5	3048.0	1143.9

Reading #	Port #	HGL (mm)	Q (m^3/s)	A (m^2)	V=Q/A (m/s)	$V^2/2g$ (mm)	Cum. Hor. Distance (mm)	Cum. Hor. Dist. w/out elbow + red (mm)	EGL HGL+$V^2/2g$ (ft)
2	1	951.8					0.0		951.8
	2	951.3					0.0		951.3
	3	951.8					0.0		951.8
	3.5	947.5	0.016	0.067	0.240	2.9	63.4		950.4
	4	947.2	0.016	0.067	0.240	2.9	149.4		950.1
	5	948.6	0.016	0.067	0.240	2.9	292.6		951.5
	6	948.6	0.016	0.067	0.240	2.9	433.4		951.5
	7	946.6	0.016	0.057	0.283	4.1	706.5		950.7
	8	944.8	0.016	0.046	0.352	6.3	928.7		951.1
	9	940.9	0.016	0.038	0.427	9.3	1716.1	609.6	950.2
	10	939.9	0.016	0.038	0.427	9.3	2325.7	1219.2	949.2
	11	940.0	0.016	0.038	0.427	9.3	2884.5	1778.0	949.3
	12	939.9	0.016	0.038	0.427	9.3	3544.9	2438.4	949.2
	13	938.6	0.016	0.038	0.427	9.3	4154.5	3048.0	947.9

Reading #	Port #	HGL (mm)	Q (m^3/s)	A (m^2)	V=Q/A (m/s)	$V^2/2g$ (mm)	Cum. Hor. Distance (mm)	Cum. Hor. Dist. w/out elbow + red (mm)	EGL HGL+$V^2/2g$ (mm)
8	1	1275.2					0.0		1275.2
	2	1278.5					0.0		1278.5
	3	1277.9					0.0		1277.9
	3.5	1184.4	0.073	0.067	1.094	61.0	63.4		1245.4
	4	1187.3	0.073	0.067	1.094	61.0	149.4		1248.3
	5	1215.3	0.073	0.067	1.094	61.0	292.6		1276.3
	6	1217.5	0.073	0.067	1.094	61.0	433.4		1278.5
	7	1173.5	0.073	0.057	1.288	84.6	706.5		1258.1
	8	1133.2	0.073	0.046	1.604	131.1	928.7		1264.3
	9	1045.2	0.073	0.038	1.944	192.7	1716.1	609.6	1237.9
	10	1030.8	0.073	0.038	1.944	192.7	2325.7	1219.2	1223.5
	11	1033.5	0.073	0.038	1.944	192.7	2884.5	1778.0	1226.2
	12	1014.8	0.073	0.038	1.944	192.7	3544.9	2438.4	1207.5
	13	1005.5	0.073	0.038	1.944	192.7	4154.5	3048.0	1198.2

Reading #	Port #	HGL (mm)	Q (m^3/s)	A (m^2)	V=Q/A (m/s)	$V^2/2g$ (mm)	Cum. Hor. Distance (mm)	Cum. Hor. Dist. w/out elbow + red (mm)	EGL HGL+$V^2/2g$ (ft)
3	1	983.9					0.0		983.9
	2	983.8					0.0		983.8
	3	984.5					0.0		984.5
	3.5	973.7	0.032	0.067	0.484	11.9	63.4		985.6
	4	974.6	0.032	0.067	0.484	11.9	149.4		986.5
	5	977.5	0.032	0.067	0.484	11.9	292.6		989.4
	6	977.5	0.032	0.067	0.484	11.9	433.4		989.4
	7	972.5	0.032	0.057	0.569	16.5	706.5		989.0
	8	967.3	0.032	0.046	0.709	25.6	928.7		992.9
	9	957.8	0.032	0.038	0.859	37.6	1716.1	609.6	995.4
	10	955.7	0.032	0.038	0.859	37.6	2325.7	1219.2	993.3
	11	955.3	0.032	0.038	0.859	37.6	2884.5	1778.0	992.9
	12	953.6	0.032	0.038	0.859	37.6	3544.9	2438.4	991.2
	13	952.5	0.032	0.038	0.859	37.6	4154.5	3048.0	990.1

Reading #	Port #	HGL (mm)	Q (m^3/s)	A (m^2)	V=Q/A (m/s)	$V^2/2g$ (mm)	Cum. Hor. Distance (mm)	Cum. Hor. Dist. w/out elbow + red (mm)	EGL HGL+$V^2/2g$ (mm)
9	1	1355.3					0.0		1355.3
	2	1356.2					0.0		1356.2
	3	1356.5					0.0		1356.5
	3.5	1235.3	0.083	0.067	1.237	78.0	63.4		1313.3
	4	1238.6	0.083	0.067	1.237	78.0	149.4		1316.6
	5	1276.2	0.083	0.067	1.237	78.0	292.6		1354.2
	6	1278.2	0.083	0.067	1.237	78.0	433.4		1356.2
	7	1220.3	0.083	0.057	1.457	108.2	706.5		1328.5
	8	1171.7	0.083	0.046	1.814	167.7	928.7		1339.4
	9	1060.8	0.083	0.038	2.199	246.4	1716.1	609.6	1307.2
	10	1042.7	0.083	0.038	2.199	246.4	2325.7	1219.2	1289.1
	11	1049.9	0.083	0.038	2.199	246.4	2884.5	1778.0	1296.3
	12	1025.9	0.083	0.038	2.199	246.4	3544.9	2438.4	1272.3
	13	1014.4	0.083	0.038	2.199	246.4	4154.5	3048.0	1260.8

Reading #	Port #	HGL (mm)	Q (m^3/s)	A (m^2)	V=Q/A (m/s)	$V^2/2g$ (mm)	Cum. Hor. Distance (mm)	Cum. Hor. Dist. w/out elbow + red (mm)	EGL HGL+$V^2/2g$ (ft)
4	1	1020.9					0.0		1020.9
	2	1020.9					0.0		1020.9
	3	1021.8					0.0		1021.8
	3.5	1001.9	0.038	0.067	0.567	16.4	63.4		1018.3
	4	1002.1	0.038	0.067	0.567	16.4	149.4		1018.5
	5	1009.2	0.038	0.067	0.567	16.4	292.6		1025.6
	6	1009.3	0.038	0.067	0.567	16.4	433.4		1025.7
	7	999.2	0.038	0.057	0.668	22.7	706.5		1021.9
	8	990.7	0.038	0.046	0.832	35.2	928.7		1025.9
	9	972.6	0.038	0.038	1.008	51.8	1716.1	609.6	1024.4
	10	969.2	0.038	0.038	1.008	51.8	2325.7	1219.2	1021.0
	11	969.4	0.038	0.038	1.008	51.8	2884.5	1778.0	1021.2
	12	965.9	0.038	0.038	1.008	51.8	3544.9	2438.4	1017.7
	13	963.8	0.038	0.038	1.008	51.8	4154.5	3048.0	1015.6

Reading #	Port #	HGL (mm)	Q (m^3/s)	A (m^2)	V=Q/A (m/s)	$V^2/2g$ (mm)	Cum. Hor. Distance (mm)	Cum. Hor. Dist. w/out elbow + red (mm)	EGL HGL+$V^2/2g$ (mm)
10	1	1440.9					0.0		1440.9
	2	1445.4					0.0		1445.4
	3	1446.3					0.0		1446.3
	3.5	1293.4	0.093	0.067	1.387	98.0	63.4		1391.4
	4	1296.8	0.093	0.067	1.387	98.0	149.4		1394.8
	5	1343.6	0.093	0.067	1.387	98.0	292.6		1441.6
	6	1347.0	0.093	0.067	1.387	98.0	433.4		1445.0
	7	1274.5	0.093	0.057	1.633	135.9	706.5		1410.4
	8	1214.0	0.093	0.046	2.033	210.6	928.7		1424.6
	9	1081.9	0.093	0.038	2.464	309.5	1716.1	609.6	1391.4
	10	1058.5	0.093	0.038	2.464	309.5	2325.7	1219.2	1368.0
	11	1065.5	0.093	0.038	2.464	309.5	2884.5	1778.0	1375.0
	12	1040.6	0.093	0.038	2.464	309.5	3544.9	2438.4	1350.1
	13	1023.5	0.093	0.038	2.464	309.5	4154.5	3048.0	1333.0

Reading #	Port #	HGL (mm)	Q (m^3/s)	A (m^2)	V=Q/A (m/s)	$V^2/2g$ (mm)	Cum. Hor. Distance (mm)	Cum. Hor. Dist. w/out elbow + red (mm)	EGL $HGL+V^2/2g$ (ft)
5	1	1062.2					0.0		1062.2
	2	1062.9					0.0		1062.9
	3	1063.5					0.0		1063.5
	3.5	1031.7	0.042	0.067	0.625	19.9	63.4		1051.6
	4	1032.5	0.042	0.067	0.625	19.9	149.4		1052.4
	5	1042.4	0.042	0.067	0.625	19.9	292.6		1062.3
	6	1043.8	0.042	0.067	0.625	19.9	433.4		1063.7
	7	1027.7	0.042	0.057	0.736	27.6	706.5		1055.3
	8	1014.7	0.042	0.046	0.917	42.8	928.7		1057.5
	9	986.9	0.042	0.038	1.111	63.0	1716.1	609.6	1049.9
	10	981.7	0.042	0.038	1.111	63.0	2325.7	1219.2	1044.7
	11	982.4	0.042	0.038	1.111	63.0	2884.5	1778.0	1045.4
	12	976.6	0.042	0.038	1.111	63.0	3544.9	2438.4	1039.6
	13	973.3	0.042	0.038	1.111	63.0	4154.5	3048.0	1036.3

Reading #	Port #	HGL (mm)	Q (m^3/s)	A (m^2)	V=Q/A (m/s)	$V^2/2g$ (mm)	Cum. Hor. Distance (mm)	Cum. Hor. Dist. w/out elbow + red (mm)	EGL $HGL+V^2/2g$ (mm)
6	1	1127.2					0.0		1127.2
	2	1129.5					0.0		1129.5
	3	1130					0.0		1130.0
	3.5	1080.1	0.053	0.067	0.791	31.9	63.4		1112.0
	4	1079.4	0.053	0.067	0.791	31.9	149.4		1111.3
	5	1094.3	0.053	0.067	0.791	31.9	292.6		1126.2
	6	1096.0	0.053	0.067	0.791	31.9	433.4		1127.9
	7	1072.3	0.053	0.057	0.931	44.2	706.5		1116.5
	8	1051.3	0.053	0.046	1.160	68.6	928.7		1119.9
	9	1007.1	0.053	0.038	1.406	100.7	1716.1	609.6	1107.8
	10	997.7	0.053	0.038	1.406	100.7	2325.7	1219.2	1098.4
	11	1000.4	0.053	0.038	1.406	100.7	2884.5	1778.0	1101.1
	12	989.8	0.053	0.038	1.406	100.7	3544.9	2438.4	1090.5
	13	984.9	0.053	0.038	1.406	100.7	4154.5	3048.0	1085.6

		Reading #	Q (cms)	Headbox EGL	Projected EGL	He (mm)	Ke = $2g/V^2$+He	Average He	Average Ke
Date:	10/21/1997								
Run#:	21								
Data Collected By:	CRW	1*	0.007	944.4	943.8	0.61	0.32		
Inlet Description:	# 13	2*	0.016	965.5	965.3	0.21	0.02	27.15	0.16
		3*	0.026	999.5	999.2	0.34	0.01		
Barrel Slope:	2.00%	4*	0.036	1037.5	1037.8	-0.36	-0.01	**Average He (no f)**	**Average Ke**
Inlet Diameter:	11.5 inches	5	0.042	1078.4	1066.4	11.97	0.19		
Barrel Length:	12 feet	6	0.053	1143.1	1128.0	15.10	0.15		
Barrel Area:	0.0377	7	0.063	1217.2	1193.4	23.77	0.17	19.37	0.14
Culvert Barrel Dia:	219.1 mm = 8.625 in.	8	0.072	1284.5	1253.7	30.74	0.16		
Reducer # :	2	9	0.082	1368.0	1330.6	37.47	0.15		
Reducer length :	23.0 inches	10	0.092	1451.6	1407.8	43.83	0.15		

Note = Readings with a " * " were not included in the average

Reading #	Q (cms)	He total (mm)	Hf elbow (mm)	Hf reducer (mm)	He (no f) (mm)	Ke (no f)= $2g/V^2$He
5	0.042	11.97	0.56	1.24	10.17	0.16
6	0.053	15.10	0.96	2.11	12.03	0.12
7	0.063	23.77	1.45	3.22	19.10	0.13
8	0.072	30.74	1.82	4.02	24.90	0.13
9	0.082	37.47	2.12	4.70	30.65	0.13

Reading #	Port #	HGL (mm)	Q (m^3/s)	A (m^2)	V=Q/A (m/s)	V^2/2g (mm)	Cum. Hor. Distance (mm)	Cum. Hor. Dist. w/out elbow + red (mm)	EGL HGL+V^2/2g (ft)
1	1	944.9					0.0		944.9
	2	944					0.0		944.0
	3	944.4					0.0		944.4
	3.5	943.4	0.0073	0.067	0.109	0.6	63.4		944.0
	4	943.2	0.0073	0.067	0.109	0.6	149.4		943.8
	5	943.2	0.0073	0.067	0.109	0.6	292.6		943.8
	6	943.3	0.0073	0.067	0.109	0.6	433.4		943.9
	7	943.1	0.0073	0.057	0.128	0.8	706.5		943.9
	8	942.3	0.0073	0.046	0.160	1.3	928.7		943.6
	9	942.0	0.0073	0.038	0.194	1.9	1716.1	609.6	943.9
	10	941.1	0.0073	0.038	0.194	1.9	2325.7	1219.2	943.0
	11	940.4	0.0073	0.038	0.194	1.9	2884.5	1778.0	942.3
	12	940.6	0.0073	0.038	0.194	1.9	3544.9	2438.4	942.5
	13	940.6	0.0073	0.038	0.194	1.9	4154.5	3048.0	942.5

Reading #	Port #	HGL (mm)	Q (m^3/s)	A (m^2)	V=Q/A (m/s)	V^2/2g (mm)	Cum. Hor. Distance (mm)	Cum. Hor. Dist. w/out elbow + red (mm)	EGL HGL+V^2/2g (mm)
7	1	1216.7					0.0		1216.7
	2	1216.8					0.0		1216.8
	3	1218					0.0		1218.0
	3.5	1151.6	0.0632	0.067	0.943	45.4	63.4		1197.0
	4	1148.6	0.0632	0.067	0.943	45.4	149.4		1194.0
	5	1170.2	0.0632	0.067	0.943	45.4	292.6		1215.6
	6	1171.4	0.0632	0.067	0.943	45.4	433.4		1216.8
	7	1137.5	0.0632	0.057	1.111	62.9	706.5		1200.4
	8	1109.4	0.0632	0.046	1.383	97.5	928.7		1206.9
	9	1043.1	0.0632	0.038	1.676	143.2	1716.1	609.6	1186.3
	10	1030.2	0.0632	0.038	1.676	143.2	2325.7	1219.2	1173.4
	11	1034.0	0.0632	0.038	1.676	143.2	2884.5	1778.0	1177.2
	12	1018.8	0.0632	0.038	1.676	143.2	3544.9	2438.4	1162.0
	13	1010.9	0.0632	0.038	1.676	143.2	4154.5	3048.0	1154.1

Reading #	Port #	HGL (mm)	Q (m^3/s)	A (m^2)	V=Q/A (m/s)	V^2/2g (mm)	Cum. Hor. Distance (mm)	Cum. Hor. Dist. w/out elbow + red (mm)	EGL HGL+V^2/2g (ft)
2	1	965.7					0.0		965.7
	2	965.2					0.0		965.2
	3	965.5					0.0		965.5
	3.5	962.6	0.0158	0.067	0.236	2.8	63.4		965.4
	4	962.4	0.0158	0.067	0.236	2.8	149.4		965.2
	5	963.3	0.0158	0.067	0.236	2.8	292.6		966.1
	6	963.1	0.0158	0.067	0.236	2.8	433.4		965.9
	7	962.0	0.0158	0.057	0.278	3.9	706.5		965.9
	8	960.2	0.0158	0.046	0.346	6.1	928.7		966.3
	9	955.9	0.0158	0.038	0.419	9.0	1716.1	609.6	964.9
	10	955.4	0.0158	0.038	0.419	9.0	2325.7	1219.2	964.4
	11	954.9	0.0158	0.038	0.419	9.0	2884.5	1778.0	963.9
	12	954.5	0.0158	0.038	0.419	9.0	3544.9	2438.4	963.5
	13	954.1	0.0158	0.038	0.419	9.0	4154.5	3048.0	963.1

Reading #	Port #	HGL (mm)	Q (m^3/s)	A (m^2)	V=Q/A (m/s)	V^2/2g (mm)	Cum. Hor. Distance (mm)	Cum. Hor. Dist. w/out elbow + red (mm)	EGL HGL+V^2/2g (mm)
8	1	1282.0					0.0		1282.0
	2	1286					0.0		1286.0
	3	1285.4					0.0		1285.4
	3.5	1199.2	0.0721	0.067	1.076	59.0	63.4		1258.2
	4	1197.3	0.0721	0.067	1.076	59.0	149.4		1256.3
	5	1223.5	0.0721	0.067	1.076	59.0	292.6		1282.5
	6	1225.8	0.0721	0.067	1.076	59.0	433.4		1284.8
	7	1183.8	0.0721	0.057	1.267	81.8	706.5		1265.6
	8	1143.9	0.0721	0.046	1.578	126.9	928.7		1270.8
	9	1058.7	0.0721	0.038	1.912	186.4	1716.1	609.6	1245.1
	10	1043.3	0.0721	0.038	1.912	186.4	2325.7	1219.2	1229.7
	11	1045.5	0.0721	0.038	1.912	186.4	2884.5	1778.0	1231.9
	12	1027.9	0.0721	0.038	1.912	186.4	3544.9	2438.4	1214.3
	13	1019.0	0.0721	0.038	1.912	186.4	4154.5	3048.0	1205.4

Reading #	Port #	HGL (mm)	Q (m^3/s)	A (m^2)	V=Q/A (m/s)	V^2/2g (mm)	Cum. Hor. Distance (mm)	Cum. Hor. Dist. w/out elbow + red (mm)	EGL HGL+V^2/2g (ft)
3	1	999.4					0.0		999.4
	2	999.6					0.0		999.6
	3	999.5					0.0		999.5
	3.5	989.9	0.0264	0.067	0.394	7.9	63.4		997.8
	4	990.1	0.0264	0.067	0.394	7.9	149.4		998.0
	5	993.1	0.0264	0.067	0.394	7.9	292.6		1001.0
	6	993.5	0.0264	0.067	0.394	7.9	433.4		1001.4
	7	987.0	0.0264	0.057	0.464	11.0	706.5		998.0
	8	983.1	0.0264	0.046	0.578	17.0	928.7		1000.1
	9	973.0	0.0264	0.038	0.700	25.0	1716.1	609.6	998.0
	10	971.4	0.0264	0.038	0.700	25.0	2325.7	1219.2	996.4
	11	971.5	0.0264	0.038	0.700	25.0	2884.5	1778.0	996.5
	12	969.9	0.0264	0.038	0.700	25.0	3544.9	2438.4	994.9
	13	968.1	0.0264	0.038	0.700	25.0	4154.5	3048.0	993.1

Reading #	Port #	HGL (mm)	Q (m^3/s)	A (m^2)	V=Q/A (m/s)	V^2/2g (mm)	Cum. Hor. Distance (mm)	Cum. Hor. Dist. w/out elbow + red (mm)	EGL HGL+V^2/2g (mm)
9	1	1367.5					0.0		1367.5
	2	1367.4					0.0		1367.4
	3	1369.2					0.0		1369.2
	3.5	1248.4	0.0823	0.067	1.228	76.9	63.4		1325.3
	4	1251.9	0.0823	0.067	1.228	76.9	149.4		1328.8
	5	1289.1	0.0823	0.067	1.228	76.9	292.6		1366.0
	6	1292.3	0.0823	0.067	1.228	76.9	433.4		1369.2
	7	1235.8	0.0823	0.057	1.446	106.6	706.5		1342.4
	8	1185.1	0.0823	0.046	1.801	165.3	928.7		1350.4
	9	1077.4	0.0823	0.038	2.183	242.9	1716.1	609.6	1320.3
	10	1058.4	0.0823	0.038	2.183	242.9	2325.7	1219.2	1301.3
	11	1064.0	0.0823	0.038	2.183	242.9	2884.5	1778.0	1306.9
	12	1042.1	0.0823	0.038	2.183	242.9	3544.9	2438.4	1285.0
	13	1030.2	0.0823	0.038	2.183	242.9	4154.5	3048.0	1273.1

Reading #	Port #	HGL (mm)	Q (m^3/s)	A (m^2)	V=Q/A (m/s)	V^2/2g (mm)	Cum. Hor. Distance (mm)	Cum. Hor. Dist. w/out elbow + red (mm)	EGL HGL+V^2/2g (ft)
4	1	1037.0					0.0		1037.0
	2	1037.6					0.0		1037.6
	3	1037.8					0.0		1037.8
	3.5	1017.7	0.0364	0.067	0.543	15.0	63.4		1032.7
	4	1018.0	0.0364	0.067	0.543	15.0	149.4		1033.0
	5	1024.3	0.0364	0.067	0.543	15.0	292.6		1039.3
	6	1024.7	0.0364	0.067	0.543	15.0	433.4		1039.7
	7	1014.2	0.0364	0.057	0.640	20.9	706.5		1035.1
	8	1005.8	0.0364	0.046	0.796	32.3	928.7		1038.1
	9	988.6	0.0364	0.038	0.966	47.5	1716.1	609.6	1036.1
	10	984.8	0.0364	0.038	0.966	47.5	2325.7	1219.2	1032.3
	11	985.0	0.0364	0.038	0.966	47.5	2884.5	1778.0	1032.5
	12	981.9	0.0364	0.038	0.966	47.5	3544.9	2438.4	1029.4
	13	979.4	0.0364	0.038	0.966	47.5	4154.5	3048.0	1026.9

Reading #	Port #	HGL (mm)	Q (m^3/s)	A (m^2)	V=Q/A (m/s)	V^2/2g (mm)	Cum. Hor. Distance (mm)	Cum. Hor. Dist. w/out elbow + red (mm)	EGL HGL+V^2/2g (mm)
10	1	1449.9					0.0		1449.9
	2	1452					0.0		1452.0
	3	1452.9					0.0		1452.9
	3.5	1302.8	0.0915	0.067	1.366	95.1	63.4		1397.9
	4	1305.9	0.0915	0.067	1.366	95.1	149.4		1401.0
	5	1353.5	0.0915	0.067	1.366	95.1	292.6		1448.6
	6	1357.0	0.0915	0.067	1.366	95.1	433.4		1452.1
	7	1285.8	0.0915	0.057	1.608	131.8	706.5		1417.6
	8	1225.6	0.0915	0.046	2.002	204.3	928.7		1429.9
	9	1094.9	0.0915	0.038	2.427	300.2	1716.1	609.6	1395.1
	10	1072.3	0.0915	0.038	2.427	300.2	2325.7	1219.2	1372.5
	11	1078.1	0.0915	0.038	2.427	300.2	2884.5	1778.0	1378.3
	12	1051.8	0.0915	0.038	2.427	300.2	3544.9	2438.4	1352.0
	13	1037.5	0.0915	0.038	2.427	300.2	4154.5	3048.0	1337.7

		Reading #	Q (cms)	Headbox EGL	Projected EGL	He (mm)	Ke = $2g/V^2$*He	Average He	Average Ke
Date:	10/21/1997								
Run#:	21								
Data Collected By:	CRW	1*	0.007	944.4	943.8	0.61	0.32		
Inlet Description:	# 13	2*	0.016	965.5	965.3	0.21	0.02	27.15	0.16
		3*	0.026	999.5	999.2	0.34	0.01		
Barrel Slope:	2.00%	4*	0.036	1037.5	1037.8	-0.36	-0.01	Average He (no f)	Average Ke
Inlet Diameter:	11.5 inches	5	0.042	1078.4	1066.4	11.97	0.19		
Barrel Length:	12 feet	6	0.053	1143.1	1128.0	15.10	0.15		
Barrel Area:	0.0377	7	0.063	1217.2	1193.4	23.77	0.17	19.37	0.14
Culvert Barrel Dia:	219.1 mm = 8.625 in.	8	0.072	1284.5	1253.7	30.74	0.16		
Reducer # :	2	9	0.082	1368.0	1330.6	37.47	0.15		
Reducer length :	23.0 inches	10	0.092	1451.6	1407.8	43.83	0.15		

Note = Readings with a " * " were not included in the average

Reading #	Q (cms)	He total (mm)	Hf elbow (mm)	Hf reducer (mm)	He (no f) (mm)	Ke (no f)= $2g/V^2$*He
5	0.042	11.97	0.56	1.24	10.17	0.16
6	0.053	15.10	0.96	2.11	12.03	0.12
7	0.063	23.77	1.45	3.22	19.10	0.13
8	0.072	30.74	1.82	4.02	24.90	0.13
9	0.082	37.47	2.12	4.70	30.65	0.13

Reading #	Port #	HGL (mm)	Q (m^3/s)	A (m^2)	V=Q/A (m/s)	$V^2/2g$ (mm)	Cum. Hor. Distance (mm)	Cum. Hor. Dist. w/out elbow + red (mm)	EGL HGL+$V^2/2g$ (ft)
1	1	944.9					0.0		944.9
	2	944					0.0		944.0
	3	944.4					0.0		944.4
	3.5	943.4	0.0073	0.067	0.109	0.6	63.4		944.0
	4	943.2	0.0073	0.067	0.109	0.6	149.4		943.8
	5	943.2	0.0073	0.067	0.109	0.6	292.6		943.8
	6	943.3	0.0073	0.067	0.109	0.6	433.4		943.9
	7	943.1	0.0073	0.057	0.128	0.8	706.5		943.9
	8	942.3	0.0073	0.046	0.160	1.3	928.7		943.6
	9	942.0	0.0073	0.038	0.194	1.9	1716.1	609.6	943.9
	10	941.1	0.0073	0.038	0.194	1.9	2325.7	1219.2	943.0
	11	940.4	0.0073	0.038	0.194	1.9	2884.5	1778.0	942.3
	12	940.6	0.0073	0.038	0.194	1.9	3544.9	2438.4	942.5
	13	940.6	0.0073	0.038	0.194	1.9	4154.5	3048.0	942.5

Reading #	Port #	HGL (mm)	Q (m^3/s)	A (m^2)	V=Q/A (m/s)	$V^2/2g$ (mm)	Cum. Hor. Distance (mm)
7	1	1216.7					0.0
	2	1216.8					0.0
	3	1218					0.0
	3.5	1151.6	0.0632	0.067	0.943	45.4	63.4
	4	1148.6	0.0632	0.067	0.943	45.4	149.4
	5	1170.2	0.0632	0.067	0.943	45.4	292.6
	6	1171.4	0.0632	0.067	0.943	45.4	433.4
	7	1137.5	0.0632	0.057	1.111	62.9	706.5
	8	1109.4	0.0632	0.046	1.383	97.5	928.7
	9	1043.1	0.0632	0.038	1.676	143.2	1716.1
	10	1030.2	0.0632	0.038	1.676	143.2	2325.7
	11	1034.0	0.0632	0.038	1.676	143.2	2884.5
	12	1018.8	0.0632	0.038	1.676	143.2	3544.9
	13	1010.9	0.0632	0.038	1.676	143.2	4154.5

Reading #	Port #	HGL (mm)	Q (m^3/s)	A (m^2)	V=Q/A (m/s)	$V^2/2g$ (mm)	Cum. Hor. Distance (mm)	Cum. Hor. Dist. w/out elbow + red (mm)	EGL HGL+$V^2/2g$ (ft)
2	1	965.7					0.0		965.7
	2	965.2					0.0		965.2
	3	965.5					0.0		965.5
	3.5	962.6	0.0158	0.067	0.236	2.8	63.4		965.4
	4	962.4	0.0158	0.067	0.236	2.8	149.4		965.2
	5	963.3	0.0158	0.067	0.236	2.8	292.6		966.1
	6	963.1	0.0158	0.067	0.236	2.8	433.4		965.9
	7	962.0	0.0158	0.057	0.278	3.9	706.5		965.9
	8	960.2	0.0158	0.046	0.346	6.1	928.7		966.3
	9	955.9	0.0158	0.038	0.419	9.0	1716.1	609.6	964.9
	10	955.4	0.0158	0.038	0.419	9.0	2325.7	1219.2	964.4
	11	954.9	0.0158	0.038	0.419	9.0	2884.5	1778.0	963.9
	12	954.5	0.0158	0.038	0.419	9.0	3544.9	2438.4	963.5
	13	954.1	0.0158	0.038	0.419	9.0	4154.5	3048.0	963.1

Reading #	Port #	HGL (mm)	Q (m^3/s)	A (m^2)	V=Q/A (m/s)	$V^2/2g$ (mm)	Cum. Hor. Distance (mm)
8	1	1282.0					0.0
	2	1286					0.0
	3	1285.4					0.0
	3.5	1199.2	0.0721	0.067	1.076	59.0	63.4
	4	1197.3	0.0721	0.067	1.076	59.0	149.4
	5	1223.5	0.0721	0.067	1.076	59.0	292.6
	6	1225.8	0.0721	0.067	1.076	59.0	433.4
	7	1183.8	0.0721	0.057	1.267	81.8	706.5
	8	1143.9	0.0721	0.046	1.578	126.9	928.7
	9	1058.7	0.0721	0.038	1.912	186.4	1716.1
	10	1043.3	0.0721	0.038	1.912	186.4	2325.7
	11	1045.5	0.0721	0.038	1.912	186.4	2884.5
	12	1027.9	0.0721	0.038	1.912	186.4	3544.9
	13	1019.0	0.0721	0.038	1.912	186.4	4154.5

Reading #	Port #	HGL (mm)	Q (m^3/s)	A (m^2)	V=Q/A (m/s)	$V^2/2g$ (mm)	Cum. Hor. Distance (mm)	Cum. Hor. Dist. w/out elbow + red (mm)	EGL HGL+$V^2/2g$ (ft)
3	1	999.4					0.0		999.4
	2	999.6					0.0		999.6
	3	999.5					0.0		999.5
	3.5	989.9	0.0264	0.067	0.394	7.9	63.4		997.8
	4	990.1	0.0264	0.067	0.394	7.9	149.4		998.0
	5	993.1	0.0264	0.067	0.394	7.9	292.6		1001.0
	6	993.5	0.0264	0.067	0.394	7.9	433.4		1001.4
	7	987.0	0.0264	0.057	0.464	11.0	706.5		998.0
	8	983.1	0.0264	0.046	0.578	17.0	928.7		1000.1
	9	973.0	0.0264	0.038	0.700	25.0	1716.1	609.6	998.0
	10	971.4	0.0264	0.038	0.700	25.0	2325.7	1219.2	996.4
	11	971.5	0.0264	0.038	0.700	25.0	2884.5	1778.0	996.5
	12	969.9	0.0264	0.038	0.700	25.0	3544.9	2438.4	994.9
	13	968.1	0.0264	0.038	0.700	25.0	4154.5	3048.0	993.1

Reading #	Port #	HGL (mm)	Q (m^3/s)	A (m^2)	V=Q/A (m/s)	$V^2/2g$ (mm)	Cum. Hor. Distance (mm)
9	1	1367.5					0.0
	2	1367.4					0.0
	3	1369.2					0.0
	3.5	1248.4	0.0823	0.067	1.228	76.9	63.4
	4	1251.9	0.0823	0.067	1.228	76.9	149.4
	5	1289.1	0.0823	0.067	1.228	76.9	292.6
	6	1292.3	0.0823	0.067	1.228	76.9	433.4
	7	1235.8	0.0823	0.057	1.446	106.6	706.5
	8	1185.1	0.0823	0.046	1.801	165.3	928.7
	9	1077.4	0.0823	0.038	2.183	242.9	1716.1
	10	1058.4	0.0823	0.038	2.183	242.9	2325.7
	11	1064.0	0.0823	0.038	2.183	242.9	2884.5
	12	1042.1	0.0823	0.038	2.183	242.9	3544.9
	13	1030.2	0.0823	0.038	2.183	242.9	4154.5

Reading #	Port #	HGL (mm)	Q (m^3/s)	A (m^2)	V=Q/A (m/s)	$V^2/2g$ (mm)	Cum. Hor. Distance (mm)	Cum. Hor. Dist. w/out elbow + red (mm)	EGL HGL+$V^2/2g$ (ft)
4	1	1037.0					0.0		1037.0
	2	1037.6					0.0		1037.6
	3	1037.8					0.0		1037.8
	3.5	1017.7	0.0364	0.067	0.543	15.0	63.4		1032.7
	4	1018.0	0.0364	0.067	0.543	15.0	149.4		1033.0
	5	1024.3	0.0364	0.067	0.543	15.0	292.6		1039.3
	6	1024.7	0.0364	0.067	0.543	15.0	433.4		1039.7
	7	1014.2	0.0364	0.057	0.640	20.9	706.5		1035.1
	8	1005.8	0.0364	0.046	0.796	32.3	928.7		1038.1
	9	988.6	0.0364	0.038	0.966	47.5	1716.1	609.6	1036.1
	10	984.8	0.0364	0.038	0.966	47.5	2325.7	1219.2	1032.3
	11	985.0	0.0364	0.038	0.966	47.5	2884.5	1778.0	1032.5
	12	981.9	0.0364	0.038	0.966	47.5	3544.9	2438.4	1029.4
	13	979.4	0.0364	0.038	0.966	47.5	4154.5	3048.0	1026.9

Reading #	Port #	HGL (mm)	Q (m^3/s)	A (m^2)	V=Q/A (m/s)	$V^2/2g$ (mm)	Cum. Hor. Distance (mm)
10	1	1449.9					0.0
	2	1452					0.0
	3	1452.9					0.0
	3.5	1302.8	0.0915	0.067	1.366	95.1	63.4
	4	1305.9	0.0915	0.067	1.366	95.1	149.4
	5	1353.5	0.0915	0.067	1.366	95.1	292.6
	6	1357.0	0.0915	0.067	1.366	95.1	433.4
	7	1285.8	0.0915	0.057	1.608	131.8	706.5
	8	1225.6	0.0915	0.046	2.002	204.3	928.7
	9	1094.9	0.0915	0.038	2.427	300.2	1716.1
	10	1072.3	0.0915	0.038	2.427	300.2	2325.7
	11	1078.1	0.0915	0.038	2.427	300.2	2884.5
	12	1051.8	0.0915	0.038	2.427	300.2	3544.9
	13	1037.5	0.0915	0.038	2.427	300.2	4154.5

		Reading #	Q (cms)	Headbox EGL	Projected EGL	He (mm)	Ke = $2g/V^2$+He	Average He	Average Ke
Date:	10/23/1997								
Run#:	22								
Data Collected By:	CRW	1*	0.007	937.3	935.7	1.63	0.83		
Inlet Description:	# 13	2*	0.016	959.1	957.7	1.40	0.15	28.11	0.17
		3*	0.027	994.7	993.3	1.40	0.05		
Barrel Slope:	2.80%	4*	0.037	1034.4	1033.5	0.82	0.02	**Average He (no f)**	**Average Ke**
Inlet Diameter:	11.5 inches	5	0.042	1073.5	1061.6	11.91	0.18		
Barrel Length:	12 feet	6	0.052	1132.1	1114.9	17.15	0.17		
Barrel Area:	0.0377	7	0.064	1210.1	1185.4	24.66	0.17	20.09	0.14
Culvert Barrel Dia:	219.1 mm = 8.625 in.	8	0.073	1278.8	1247.9	30.97	0.16		
Reducer # :	2	9	0.083	1360.7	1322.3	38.39	0.16		
Reducer length :	23.0 inches	10	0.091	1438.7	1393.1	45.61	0.15		

Note = Readings with a " * " were not included in the average

Reading #	Q (cms)	He total (mm)	Hf elbow (mm)	Hf reducer (mm)	He (no f) (mm)	Ke (no f)= $2g/V^2$+He
5	0.042	11.91	0.58	1.28	10.05	0.16
6	0.052	17.15	1.03	2.27	13.85	0.14
7	0.064	24.66	1.37	3.02	20.27	0.14
8	0.073	30.97	1.96	4.34	24.67	0.13
9	0.083	38.39	2.11	4.66	31.62	0.13

Reading #	Port #	HGL (mm)	Q (m^3/s)	A (m^2)	V=Q/A (m/s)	V^2/2g (mm)	Cum. Hor. Distance (mm)	Cum. Hor. Dist. w/out elbow + red (mm)	EGL HGL+V^2/2g (ft)
1	1	937.3					0.0		937.3
	2	937.2					0.0		937.2
	3	937.4					0.0		937.4
	3.5	935.8	0.0074	0.067	0.110	0.6	63.4		936.4
	4	935.5	0.0074	0.067	0.110	0.6	149.4		936.1
	5	935.6	0.0074	0.067	0.110	0.6	292.6		936.2
	6	935.8	0.0074	0.067	0.110	0.6	433.4		936.4
	7	935.4	0.0074	0.057	0.130	0.9	706.5		936.3
	8	934.9	0.0074	0.046	0.162	1.3	928.7		936.2
	9	933.6	0.0074	0.038	0.196	2.0	1716.1	609.6	935.6
	10	933.4	0.0074	0.038	0.196	2.0	2325.7	1219.2	935.4
	11	933.1	0.0074	0.038	0.196	2.0	2884.5	1778.0	935.1
	12	932.9	0.0074	0.038	0.196	2.0	3544.9	2438.4	934.9
	13	933.0	0.0074	0.038	0.196	2.0	4154.5	3048.0	935.0

Reading #	Port #	HGL (mm)	Q (m^3/s)	A (m^2)	V=Q/A (m/s)	V^2/2g (mm)	Cum. Hor. Distance (mm)	Cum. Hor. Dist. w/out elbow + red (mm)	EGL HGL+V^2/2g (mm)
7	1	1208.7					0.0		1208.7
	2	1210.6					0.0		1210.6
	3	1211.0					0.0		1211.0
	3.5	1142.9	0.0640	0.067	0.955	46.5	63.4		1189.4
	4	1143.4	0.0640	0.067	0.955	46.5	149.4		1189.9
	5	1162.9	0.0640	0.067	0.955	46.5	292.6		1209.4
	6	1165.7	0.0640	0.067	0.955	46.5	433.4		1212.2
	7	1131.4	0.0640	0.057	1.125	64.5	706.5		1195.9
	8	1097.8	0.0640	0.046	1.400	100.0	928.7		1197.8
	9	1031.6	0.0640	0.038	1.698	146.9	1716.1	609.6	1178.5
	10	1019.2	0.0640	0.038	1.698	146.9	2325.7	1219.2	1166.1
	11	1024.4	0.0640	0.038	1.698	146.9	2884.5	1778.0	1171.3
	12	1010.1	0.0640	0.038	1.698	146.9	3544.9	2438.4	1157.0
	13	1000.6	0.0640	0.038	1.698	146.9	4154.5	3048.0	1147.5

Reading #	Port #	HGL (mm)	Q (m^3/s)	A (m^2)	V=Q/A (m/s)	V^2/2g (mm)	Cum. Hor. Distance (mm)	Cum. Hor. Dist. w/out elbow + red (mm)	EGL HGL+V^2/2g (ft)
2	1	959.1					0.0		959.1
	2	959.0					0.0		959.0
	3	959.1					0.0		959.1
	3.5	955.0	0.0162	0.067	0.242	3.0	63.4		958.0
	4	954.8	0.0162	0.067	0.242	3.0	149.4		957.8
	5	956.2	0.0162	0.067	0.242	3.0	292.6		959.2
	6	956.1	0.0162	0.067	0.242	3.0	433.4		959.1
	7	954.0	0.0162	0.057	0.285	4.1	706.5		958.1
	8	952.6	0.0162	0.046	0.354	6.4	928.7		959.0
	9	948.0	0.0162	0.038	0.430	9.4	1716.1	609.6	957.4
	10	947.2	0.0162	0.038	0.430	9.4	2325.7	1219.2	956.6
	11	947.2	0.0162	0.038	0.430	9.4	2884.5	1778.0	956.6
	12	946.6	0.0162	0.038	0.430	9.4	3544.9	2438.4	956.0
	13	946.3	0.0162	0.038	0.430	9.4	4154.5	3048.0	955.7

Reading #	Port #	HGL (mm)	Q (m^3/s)	A (m^2)	V=Q/A (m/s)	V^2/2g (mm)	Cum. Hor. Distance (mm)	Cum. Hor. Dist. w/out elbow + red (mm)	EGL HGL+V^2/2g (mm)
8	1	1276.1					0.0		1276.1
	2	1279.7					0.0		1279.7
	3	1280.7					0.0		1280.7
	3.5	1190.9	0.0725	0.067	1.082	59.7	63.4		1250.6
	4	1186.6	0.0725	0.067	1.082	59.7	149.4		1246.3
	5	1216.4	0.0725	0.067	1.082	59.7	292.6		1276.1
	6	1216.4	0.0725	0.067	1.082	59.7	433.4		1276.1
	7	1175.9	0.0725	0.057	1.274	82.7	706.5		1258.6
	8	1135.1	0.0725	0.046	1.586	128.3	928.7		1263.4
	9	1050.7	0.0725	0.038	1.923	188.5	1716.1	609.6	1239.2
	10	1032.7	0.0725	0.038	1.923	188.5	2325.7	1219.2	1221.2
	11	1035.2	0.0725	0.038	1.923	188.5	2884.5	1778.0	1223.7
	12	1017.9	0.0725	0.038	1.923	188.5	3544.9	2438.4	1206.4
	13	1006.9	0.0725	0.038	1.923	188.5	4154.5	3048.0	1195.4

Reading #	Port #	HGL (mm)	Q (m^3/s)	A (m^2)	V=Q/A (m/s)	V^2/2g (mm)	Cum. Hor. Distance (mm)	Cum. Hor. Dist. w/out elbow + red (mm)	EGL HGL+V^2/2g (ft)
3	1	994.4					0.0		994.4
	2	994.7					0.0		994.7
	3	994.9					0.0		994.9
	3.5	983.3	0.0269	0.067	0.401	8.2	63.4		991.5
	4	984.2	0.0269	0.067	0.401	8.2	149.4		992.4
	5	986.7	0.0269	0.067	0.401	8.2	292.6		994.9
	6	987.4	0.0269	0.067	0.401	8.2	433.4		995.6
	7	981.5	0.0269	0.057	0.473	11.4	706.5		992.9
	8	976.7	0.0269	0.046	0.589	17.7	928.7		994.4
	9	966.3	0.0269	0.038	0.714	25.9	1716.1	609.6	992.2
	10	964.1	0.0269	0.038	0.714	25.9	2325.7	1219.2	990.0
	11	964.5	0.0269	0.038	0.714	25.9	2884.5	1778.0	990.4
	12	961.9	0.0269	0.038	0.714	25.9	3544.9	2438.4	987.8
	13	961.2	0.0269	0.038	0.714	25.9	4154.5	3048.0	987.1

Reading #	Port #	HGL (mm)	Q (m^3/s)	A (m^2)	V=Q/A (m/s)	V^2/2g (mm)	Cum. Hor. Distance (mm)	Cum. Hor. Dist. w/out elbow + red (mm)	EGL HGL+V^2/2g (mm)
9	1	1358.9					0.0		1358.9
	2	1361.2					0.0		1361.2
	3	1362.1					0.0		1362.1
	3.5	1240.1	0.0827	0.067	1.234	77.7	63.4		1317.8
	4	1244.6	0.0827	0.067	1.234	77.7	149.4		1322.3
	5	1281.9	0.0827	0.067	1.234	77.7	292.6		1359.6
	6	1283.7	0.0827	0.067	1.234	77.7	433.4		1361.4
	7	1227.8	0.0827	0.057	1.453	107.7	706.5		1335.5
	8	1178.9	0.0827	0.046	1.810	166.9	928.7		1345.8
	9	1067.8	0.0827	0.038	2.194	245.3	1716.1	609.6	1313.1
	10	1046.4	0.0827	0.038	2.194	245.3	2325.7	1219.2	1291.7
	11	1055.3	0.0827	0.038	2.194	245.3	2884.5	1778.0	1300.6
	12	1029.4	0.0827	0.038	2.194	245.3	3544.9	2438.4	1274.7
	13	1021.4	0.0827	0.038	2.194	245.3	4154.5	3048.0	1266.7

Reading #	Port #	HGL (mm)	Q (m^3/s)	A (m^2)	V=Q/A (m/s)	V^2/2g (mm)	Cum. Hor. Distance (mm)	Cum. Hor. Dist. w/out elbow + red (mm)	EGL HGL+V^2/2g (ft)
4	1	1033.9					0.0		1033.9
	2	1034.4					0.0		1034.4
	3	1034.8					0.0		1034.8
	3.5	1013.2	0.0373	0.067	0.557	15.8	63.4		1029.0
	4	1013.8	0.0373	0.067	0.557	15.8	149.4		1029.6
	5	1020.2	0.0373	0.067	0.557	15.8	292.6		1036.0
	6	1021.2	0.0373	0.067	0.557	15.8	433.4		1037.0
	7	1010.6	0.0373	0.057	0.656	21.9	706.5		1032.5
	8	1001.1	0.0373	0.046	0.816	34.0	928.7		1035.1
	9	982.3	0.0373	0.038	0.989	49.9	1716.1	609.6	1032.2
	10	977.3	0.0373	0.038	0.989	49.9	2325.7	1219.2	1027.2
	11	978.6	0.0373	0.038	0.989	49.9	2884.5	1778.0	1028.5
	12	974.7	0.0373	0.038	0.989	49.9	3544.9	2438.4	1024.6
	13	972.7	0.0373	0.038	0.989	49.9	4154.5	3048.0	1022.6

Reading #	Port #	HGL (mm)	Q (m^3/s)	A (m^2)	V=Q/A (m/s)	V^2/2g (mm)	Cum. Hor. Distance (mm)	Cum. Hor. Dist. w/out elbow + red (mm)	EGL HGL+V^2/2g (mm)
10	1	1436.9					0.0		1436.9
	2	1438.1					0.0		1438.1
	3	1441.0					0.0		1441.0
	3.5	1289.7	0.0911	0.067	1.360	94.2	63.4		1383.9
	4	1294.5	0.0911	0.067	1.360	94.2	149.4		1388.7
	5	1340.8	0.0911	0.067	1.360	94.2	292.6		1435.0
	6	1343.4	0.0911	0.067	1.360	94.2	433.4		1437.6
	7	1273.4	0.0911	0.057	1.601	130.7	706.5		1404.1
	8	1216.0	0.0911	0.046	1.993	202.5	928.7		1418.5
	9	1082.5	0.0911	0.038	2.416	297.6	1716.1	609.6	1380.1
	10	1061.4	0.0911	0.038	2.416	297.6	2325.7	1219.2	1359.0
	11	1068.2	0.0911	0.038	2.416	297.6	2884.5	1778.0	1365.8
	12	1044.3	0.0911	0.038	2.416	297.6	3544.9	2438.4	1341.9
	13	1026.3	0.0911	0.038	2.416	297.6	4154.5	3048.0	1323.9

Reading #	Port #	HGL (mm)	Q (m^3/s)	A (m^2)	V=Q/A (m/s)	$V^2/2g$ (mm)	Cum. Hor. Distance (mm)	Cum. Hor. Dist. w/out elbow + red (mm)	EGL $HGL+V^2/2g$ (ft)
5	1	1072.7					0.0		1072.7
	2	1073.7					0.0		1073.7
	3	1074.1					0.0		1074.1
	3.5	1041.9	0.0424	0.067	0.633	20.4	63.4		1062.3
	4	1042.6	0.0424	0.067	0.633	20.4	149.4		1063.0
	5	1052.5	0.0424	0.067	0.633	20.4	292.6		1072.9
	6	1052.7	0.0424	0.067	0.633	20.4	433.4		1073.1
	7	1037.1	0.0424	0.057	0.745	28.3	706.5		1065.4
	8	1024.0	0.0424	0.046	0.928	43.9	928.7		1067.9
	9	994.7	0.0424	0.038	1.125	64.5	1716.1	609.6	1059.2
	10	988.1	0.0424	0.038	1.125	64.5	2325.7	1219.2	1052.6
	11	991.6	0.0424	0.038	1.125	64.5	2884.5	1778.0	1056.1
	12	984.4	0.0424	0.038	1.125	64.5	3544.9	2438.4	1048.9
	13	981.5	0.0424	0.038	1.125	64.5	4154.5	3048.0	1046.0

Reading #	Port #	HGL (mm)	Q (m^3/s)	A (m^2)	V=Q/A (m/s)	$V^2/2g$ (mm)	Cum. Hor. Distance (mm)	Cum. Hor. Dist. w/out elbow + red (mm)	EGL $HGL+V^2/2g$ (mm)
6	1	1130.9					0.0		1130.9
	2	1132.2					0.0		1132.2
	3	1133.1					0.0		1133.1
	3.5	1085.7	0.0523	0.067	0.781	31.1	63.4		1116.8
	4	1086.2	0.0523	0.067	0.781	31.1	149.4		1117.3
	5	1099.9	0.0523	0.067	0.781	31.1	292.6		1131.0
	6	1101.9	0.0523	0.067	0.781	31.1	433.4		1133.0
	7	1077.4	0.0523	0.057	0.919	43.1	706.5		1120.5
	8	1056.5	0.0523	0.046	1.144	66.8	928.7		1123.3
	9	1011.0	0.0523	0.038	1.387	98.1	1716.1	609.6	1109.1
	10	1003.9	0.0523	0.038	1.387	98.1	2325.7	1219.2	1102.0
	11	1005.6	0.0523	0.038	1.387	98.1	2884.5	1778.0	1103.7
	12	993.9	0.0523	0.038	1.387	98.1	3544.9	2438.4	1092.0
	13	989.2	0.0523	0.038	1.387	98.1	4154.5	3048.0	1087.3

		Reading #	Q (cms)	Headbox EGL	Projected EGL	He (mm)	Ke = $2g/V^2$+He	Average He	Average Ke
Date:	10/27/1997								
Run#:	23								
Data Collected By:	CRW	1*	0.008	965.7	964.4	1.36	0.67		
Inlet Description:	# 13	2*	0.016	987.2	985.4	1.72	0.19	25.04	0.17
		3*	0.027	1024.9	1022.8	2.11	0.08		
Barrel Slope:	3.50%	4*	0.037	1062.2	1061.2	0.94	0.02	**Average He (no f)**	**Average Ke**
Inlet Diameter:	11.5 inches	5	0.042	1102.3	1092.0	10.38	0.16		
Barrel Length:	12 feet	6	0.053	1167.5	1150.0	17.55	0.18		
Barrel Area:	0.0377	7	0.064	1244.2	1221.1	23.08	0.16	20.36	0.14
Culvert Barrel Dia:	219.1 mm = 8.625 in.	8	0.073	1318.1	1282.3	35.73	0.19		
Reducer # :	2	9	0.083	1399.2	1360.7	38.48	0.16		
Reducer length :	23.0 inches								

Note = Readings with a " * " were not included in the average

Reading #	Q (cms)	He total (mm)	Hf elbow (mm)	Hf reducer (mm)	He (no f) (mm)	Ke (no f)= $2g/V^2$He
5	0.042	10.38	0.66	1.46	8.26	0.13
6	0.053	17.55	1.06	2.35	14.14	0.14
7	0.064	23.08	1.51	3.33	18.24	0.12
8	0.073	35.73	1.87	4.14	29.72	0.16
9	0.083	38.48	2.20	4.86	31.42	0.13

Reading #	Port #	HGL (mm)	Q (m^3/s)	A (m^2)	V=Q/A (m/s)	V^2/2g (mm)	Cum. Hor. Distance (mm)	Cum. Hor. Dist. w/out elbow + red (mm)	EGL HGL+V^2/2g (ft)
1	1	966.5					0.0		966.5
	2	965.2					0.0		965.2
	3	965.5					0.0		965.5
	3.5	963.9	0.0075	0.067	0.112	0.64	63.4		964.5
	4	963.9	0.0075	0.067	0.112	0.64	149.4		964.5
	5	963.7	0.0075	0.067	0.112	0.64	292.6		964.3
	6	964.6	0.0075	0.067	0.112	0.64	433.4		965.2
	7	963.3	0.0075	0.057	0.132	0.89	706.5		964.2
	8	962.6	0.0075	0.046	0.164	1.37	928.7		964.0
	9	962.0	0.0075	0.038	0.199	2.02	1716.1	609.6	964.0
	10	961.9	0.0075	0.038	0.199	2.02	2325.7	1219.2	963.9
	11	961.8	0.0075	0.038	0.199	2.02	2884.5	1778.0	963.8
	12	961.1	0.0075	0.038	0.199	2.02	3544.9	2438.4	963.1
	13	961.1	0.0075	0.038	0.199	2.02	4154.5	3048.0	963.1

Reading #	Port #	HGL (mm)	Q (m^3/s)	A (m^2)	V=Q/A (m/s)	V^2/2g (mm)	Cum. Hor. Distance (mm)	Cum. Hor. Dist. w/out elbow + red (mm)	EGL HGL+V^2/2g (mm)
7	1	1241.2					0.0		1241.2
	2	1246.0					0.0		1246.0
	3	1245.3					0.0		1245.3
	3.5	1177.8	0.0640	0.067	0.955	46.5	63.4		1224.3
	4	1177.6	0.0640	0.067	0.955	46.5	149.4		1224.1
	5	1196.4	0.0640	0.067	0.955	46.5	292.6		1242.9
	6	1196.9	0.0640	0.067	0.955	46.5	433.4		1243.4
	7	1163.4	0.0640	0.057	1.125	64.5	706.5		1227.9
	8	1133.7	0.0640	0.046	1.400	100.0	928.7		1233.7
	9	1066.7	0.0640	0.038	1.698	146.9	1716.1	609.6	1213.6
	10	1054.0	0.0640	0.038	1.698	146.9	2325.7	1219.2	1200.9
	11	1057.0	0.0640	0.038	1.698	146.9	2884.5	1778.0	1203.9
	12	1042.1	0.0640	0.038	1.698	146.9	3544.9	2438.4	1189.0
	13	1033.4	0.0640	0.038	1.698	146.9	4154.5	3048.0	1180.3

Reading #	Port #	HGL (mm)	Q (m^3/s)	A (m^2)	V=Q/A (m/s)	V^2/2g (mm)	Cum. Hor. Distance (mm)	Cum. Hor. Dist. w/out elbow + red (mm)	EGL HGL+V^2/2g (ft)
2	1	987.4					0.0		987.4
	2	987.4					0.0		987.4
	3	986.7					0.0		986.7
	3.5	983.5	0.0161	0.067	0.240	2.94	63.4		986.4
	4	982.6	0.0161	0.067	0.240	2.94	149.4		985.5
	5	983.6	0.0161	0.067	0.240	2.94	292.6		986.5
	6	984.4	0.0161	0.067	0.240	2.94	433.4		987.3
	7	981.8	0.0161	0.057	0.283	4.08	706.5		985.9
	8	980.1	0.0161	0.046	0.352	6.33	928.7		986.4
	9	975.6	0.0161	0.038	0.427	9.30	1716.1	609.6	984.9
	10	975.2	0.0161	0.038	0.427	9.30	2325.7	1219.2	984.5
	11	975.1	0.0161	0.038	0.427	9.30	2884.5	1778.0	984.4
	12	974.3	0.0161	0.038	0.427	9.30	3544.9	2438.4	983.6
	13	973.8	0.0161	0.038	0.427	9.30	4154.5	3048.0	983.1

Reading #	Port #	HGL (mm)	Q (m^3/s)	A (m^2)	V=Q/A (m/s)	V^2/2g (mm)	Cum. Hor. Distance (mm)	Cum. Hor. Dist. w/out elbow + red (mm)	EGL HGL+V^2/2g (mm)
8	1	1316.5					0.0		1316.5
	2	1318.9					0.0		1318.9
	3	1318.8					0.0		1318.8
	3.5	1226.2	0.0725	0.067	1.082	59.7	63.4		1285.9
	4	1227.1	0.0725	0.067	1.082	59.7	149.4		1286.8
	5	1252.8	0.0725	0.067	1.082	59.7	292.6		1312.5
	6	1253.1	0.0725	0.067	1.082	59.7	433.4		1312.8
	7	1210.3	0.0725	0.057	1.274	82.7	706.5		1293.0
	8	1171.9	0.0725	0.046	1.586	128.3	928.7		1300.2
	9	1086.1	0.0725	0.038	1.923	188.5	1716.1	609.6	1274.6
	10	1067.4	0.0725	0.038	1.923	188.5	2325.7	1219.2	1255.9
	11	1071.4	0.0725	0.038	1.923	188.5	2884.5	1778.0	1259.9
	12	1053.7	0.0725	0.038	1.923	188.5	3544.9	2438.4	1242.2
	13	1044.1	0.0725	0.038	1.923	188.5	4154.5	3048.0	1232.6

Reading #	Port #	HGL (mm)	Q (m^3/s)	A (m^2)	V=Q/A (m/s)	V^2/2g (mm)	Cum. Hor. Distance (mm)	Cum. Hor. Dist. w/out elbow + red (mm)	EGL HGL+V^2/2g (ft)
3	1	1024.6					0.0		1024.6
	2	1025.1					0.0		1025.1
	3	1025.0					0.0		1025.0
	3.5	1013.2	0.0270	0.067	0.403	8.28	63.4		1021.5
	4	1013.2	0.0270	0.067	0.403	8.28	149.4		1021.5
	5	1016.6	0.0270	0.067	0.403	8.28	292.6		1024.9
	6	1017.6	0.0270	0.067	0.403	8.28	433.4		1025.9
	7	1011.3	0.0270	0.057	0.475	11.48	706.5		1022.8
	8	1006.2	0.0270	0.046	0.591	17.79	928.7		1024.0
	9	995.7	0.0270	0.038	0.716	26.14	1716.1	609.6	1021.8
	10	993.0	0.0270	0.038	0.716	26.14	2325.7	1219.2	1019.1
	11	993.2	0.0270	0.038	0.716	26.14	2884.5	1778.0	1019.3
	12	991.6	0.0270	0.038	0.716	26.14	3544.9	2438.4	1017.7
	13	989.7	0.0270	0.038	0.716	26.14	4154.5	3048.0	1015.8

Reading #	Port #	HGL (mm)	Q (m^3/s)	A (m^2)	V=Q/A (m/s)	V^2/2g (mm)	Cum. Hor. Distance (mm)	Cum. Hor. Dist. w/out elbow + red (mm)	EGL HGL+V^2/2g (mm)
9	1	1397.6					0.0		1397.6
	2	1398.9					0.0		1398.9
	3	1401.0					0.0		1401.0
	3.5	1276.0	0.0828	0.067	1.236	77.8	63.4		1353.8
	4	1281.7	0.0828	0.067	1.236	77.8	149.4		1359.5
	5	1320.0	0.0828	0.067	1.236	77.8	292.6		1397.8
	6	1322.7	0.0828	0.067	1.236	77.8	433.4		1400.5
	7	1263.4	0.0828	0.057	1.455	107.9	706.5		1371.3
	8	1215.6	0.0828	0.046	1.812	167.3	928.7		1382.9
	9	1103.5	0.0828	0.038	2.196	245.9	1716.1	609.6	1349.4
	10	1084.7	0.0828	0.038	2.196	245.9	2325.7	1219.2	1330.6
	11	1090.8	0.0828	0.038	2.196	245.9	2884.5	1778.0	1336.7
	12	1068.9	0.0828	0.038	2.196	245.9	3544.9	2438.4	1314.8
	13	1054.1	0.0828	0.038	2.196	245.9	4154.5	3048.0	1300.0

Reading #	Port #	HGL (mm)	Q (m^3/s)	A (m^2)	V=Q/A (m/s)	V^2/2g (mm)	Cum. Hor. Distance (mm)	Cum. Hor. Dist. w/out elbow + red (mm)	EGL HGL+V^2/2g (ft)
4	1	1061.4					0.0		1061.4
	2	1062.2					0.0		1062.2
	3	1062.9					0.0		1062.9
	3.5	1042.5	0.0371	0.067	0.554	15.63	63.4		1058.1
	4	1042.6	0.0371	0.067	0.554	15.63	149.4		1058.2
	5	1048.6	0.0371	0.067	0.554	15.63	292.6		1064.2
	6	1049.7	0.0371	0.067	0.554	15.63	433.4		1065.3
	7	1038.3	0.0371	0.057	0.652	21.67	706.5		1060.0
	8	1029.7	0.0371	0.046	0.812	33.59	928.7		1063.3
	9	1010.1	0.0371	0.038	0.984	49.36	1716.1	609.6	1059.5
	10	1005.9	0.0371	0.038	0.984	49.36	2325.7	1219.2	1055.3
	11	1007.6	0.0371	0.038	0.984	49.36	2884.5	1778.0	1057.0
	12	1003.0	0.0371	0.038	0.984	49.36	3544.9	2438.4	1052.4
	13	1001.0	0.0371	0.038	0.984	49.36	4154.5	3048.0	1050.4

Reading #	Port #	HGL (mm)	Q (m^3/s)	A (m^2)	V=Q/A (m/s)	$V^2/2g$ (mm)	Cum. Hor. Distance (mm)	Cum. Hor. Dist. w/out elbow + red (mm)	EGL $HGL+V^2/2g$ (ft)
5	1	1102.2					0.0		1102.2
	2	1102.1					0.0		1102.1
	3	1102.7					0.0		1102.7
	3.5	1071.4	0.0423	0.067	0.631	20.32	63.4		1091.7
	4	1071.4	0.0423	0.067	0.631	20.32	149.4		1091.7
	5	1080.7	0.0423	0.067	0.631	20.32	292.6		1101.0
	6	1082.4	0.0423	0.067	0.631	20.32	433.4		1102.7
	7	1066.0	0.0423	0.057	0.743	28.17	706.5		1094.2
	8	1052.9	0.0423	0.046	0.926	43.67	928.7		1096.6
	9	1024.3	0.0423	0.038	1.122	64.17	1716.1	609.6	1088.5
	10	1019.4	0.0423	0.038	1.122	64.17	2325.7	1219.2	1083.6
	11	1020.3	0.0423	0.038	1.122	64.17	2884.5	1778.0	1084.5
	12	1013.0	0.0423	0.038	1.122	64.17	3544.9	2438.4	1077.2
	13	1010.3	0.0423	0.038	1.122	64.17	4154.5	3048.0	1074.5

Reading #	Port #	HGL (mm)	Q (m^3/s)	A (m^2)	V=Q/A (m/s)	$V^2/2g$ (mm)	Cum. Hor. Distance (mm)	Cum. Hor. Dist. w/out elbow + red (mm)	EGL $HGL+V^2/2g$ (mm)
6	1	1166.5					0.0		1166.5
	2	1167.6					0.0		1167.6
	3	1168.5					0.0		1168.5
	3.5	1116.5	0.0528	0.067	0.788	31.65	63.4		1148.2
	4	1118.6	0.0528	0.067	0.788	31.65	149.4		1150.3
	5	1134.2	0.0528	0.067	0.788	31.65	292.6		1165.9
	6	1134.6	0.0528	0.067	0.788	31.65	433.4		1166.3
	7	1112.0	0.0528	0.057	0.928	43.89	706.5		1155.9
	8	1091.6	0.0528	0.046	1.155	68.04	928.7		1159.6
	9	1044.9	0.0528	0.038	1.401	99.97	1716.1	609.6	1144.9
	10	1035.6	0.0528	0.038	1.401	99.97	2325.7	1219.2	1135.6
	11	1037.9	0.0528	0.038	1.401	99.97	2884.5	1778.0	1137.9
	12	1027.0	0.0528	0.038	1.401	99.97	3544.9	2438.4	1127.0
	13	1021.5	0.0528	0.038	1.401	99.97	4154.5	3048.0	1121.5

		Reading #	Q (cms)	Headbox EGL	Projected EGL	He (mm)	Ke = $2g/V^2$-He	Average He	Average Ke
Date:	10/30/1997								
Run#:	24								
Data Collected By:	CRW	1*	0.008	1025.9	1023.0	2.91	1.40		
Inlet Description:	# 13	2*	0.017	1050.4	1050.1	0.27	0.02	24.10	0.15
		3*	0.032	1090.0	1094.1	-4.05	-0.11		
Barrel Slope:	2.80%	4	0.036	1125.6	1118.3	7.29	0.16	Average He (no f)	Average Ke
Inlet Diameter:	11.5 inches	5	0.043	1165.3	1155.1	10.18	0.15		
Barrel Length:	12 feet	6	0.054	1229.8	1213.3	16.57	0.16		
Barrel Area:	0.0377	7	0.065	1305.1	1282.9	22.14	0.15	21.04	0.13
Culvert Barrel Dia:	219.1 mm = 8.625 in.	8	0.074	1375.8	1345.3	30.51	0.16		
Reducer # :	3	9	0.084	1462.4	1425.0	37.36	0.15		
Reducer length :	11.5 inches	10	0.091	1529.0	1484.3	44.64	0.15		

Note = Readings with a " * " were not included in the average

Reading #	Q (cms)	He total (mm)	Hf elbow (mm)	Hf reducer (mm)	He (no f) (mm)	Ke (no f)= $2g/V^2$-He
4	0.036	7.29	0.45	0.50	6.35	0.14
5	0.043	10.18	0.66	0.73	8.80	0.13
6	0.054	16.57	1.02	1.13	14.42	0.14
7	0.065	22.14	1.50	1.66	18.98	0.13
8	0.074	30.51	1.80	1.99	26.72	0.14
9	0.084	37.36	2.27	2.51	32.58	0.13
10	0.091	44.64	2.48	2.75	39.41	0.13

Reading #	Port #	HGL (mm)	Q (m^3/s)	A (m^2)	V=Q/A (m/s)	V^2/2g (mm)	Cum. Hor. Distance (mm)	Cum. Hor. Dist. w/out elbow + red (mm)	EGL HGL+V^2/2g (ft)
1	1	1026.6					0.0		1026.6
	2	1025.4					0.0		1025.4
	3	1025.7					0.0		1025.7
	3.5	1024.3	0.0076	0.067	0.113	0.7	63.4		1025.0
	4	1023.7	0.0076	0.067	0.113	0.7	149.4		1024.4
	5	1023.0	0.0076	0.067	0.113	0.7	292.6		1023.7
	6	1023.0	0.0076	0.067	0.113	0.7	433.4		1023.7
	7	1022.4	0.0076	0.057	0.135	0.9	617.6		1023.3
	8	1022.1	0.0076	0.046	0.165	1.4	722.3		1023.5
	9	1021.2	0.0076	0.038	0.202	2.1	1424.0	609.6	1023.3
	10	1021.3	0.0076	0.038	0.202	2.1	2033.6	1219.2	1023.4
	11	1021.4	0.0076	0.038	0.202	2.1	2592.4	1778.0	1023.5
	12	1021.7	0.0076	0.038	0.202	2.1	3252.8	2438.4	1023.8
	13	1022.0	0.0076	0.038	0.202	2.1	3862.4	3048.0	1024.1

Reading #	Port #	HGL (mm)	Q (m^3/s)	A (m^2)	V=Q/A (m/s)	V^2/2g (mm)	Cum. Hor. Distance (mm)	Cum. Hor. Dist. w/out elbow + red (mm)	EGL HGL+V^2/2g (mm)
7	1	1301.6					0.0		1301.6
	2	1305					0.0		1305.0
	3	1308.6					0.0		1308.6
	3.5	1235.4	0.0646	0.067	0.964	47.4	63.4		1282.8
	4	1233.6	0.0646	0.067	0.964	47.4	149.4		1281.0
	5	1254.4	0.0646	0.067	0.964	47.4	292.6		1301.8
	6	1259.4	0.0646	0.067	0.964	47.4	433.4		1306.8
	7	1207.3	0.0646	0.057	1.143	66.6	617.6		1273.9
	8	1194.2	0.0646	0.046	1.404	100.5	722.3		1294.7
	9	1129.7	0.0646	0.038	1.714	149.7	1424.0	609.6	1279.4
	10	1109.1	0.0646	0.038	1.714	149.7	2033.6	1219.2	1258.8
	11	1115.4	0.0646	0.038	1.714	149.7	2592.4	1778.0	1265.1
	12	1099.5	0.0646	0.038	1.714	149.7	3252.8	2438.4	1249.2
	13	1095.4	0.0646	0.038	1.714	149.7	3862.4	3048.0	1245.1

Reading #	Port #	HGL (mm)	Q (m^3/s)	A (m^2)	V=Q/A (m/s)	V^2/2g (mm)	Cum. Hor. Distance (mm)	Cum. Hor. Dist. w/out elbow + red (mm)	EGL HGL+V^2/2g (ft)
2	1	1050.8					0.0		1050.8
	2	1050.4					0.0		1050.4
	3	1049.9					0.0		1049.9
	3.5	1045.8	0.0174	0.067	0.260	3.4	63.4		1049.2
	4	1045	0.0174	0.067	0.260	3.4	149.4		1048.4
	5	1047.0	0.0174	0.067	0.260	3.4	292.6		1050.4
	6	1047.4	0.0174	0.067	0.260	3.4	433.4		1050.8
	7	1044.2	0.0174	0.057	0.308	4.8	617.6		1049.0
	8	1043	0.0174	0.046	0.378	7.3	722.3		1050.3
	9	1038.6	0.0174	0.038	0.462	10.9	1424.0	609.6	1049.5
	10	1037.7	0.0174	0.038	0.462	10.9	2033.6	1219.2	1048.6
	11	1037.2	0.0174	0.038	0.462	10.9	2592.4	1778.0	1048.1
	12	1036.0	0.0174	0.038	0.462	10.9	3252.8	2438.4	1046.9
	13	1035.8	0.0174	0.038	0.462	10.9	3862.4	3048.0	1046.7

Reading #	Port #	HGL (mm)	Q (m^3/s)	A (m^2)	V=Q/A (m/s)	V^2/2g (mm)	Cum. Hor. Distance (mm)	Cum. Hor. Dist. w/out elbow + red (mm)	EGL HGL+V^2/2g (mm)
8	1	1375.1					0.0		1375.1
	2	1375.8					0.0		1375.8
	3	1376.5					0.0		1376.5
	3.5	1277.5	0.0737	0.067	1.100	61.7	63.4		1339.2
	4	1283.8	0.0737	0.067	1.100	61.7	149.4		1345.5
	5	1309.3	0.0737	0.067	1.100	61.7	292.6		1371.0
	6	1308.5	0.0737	0.067	1.100	61.7	433.4		1370.2
	7	1253.7	0.0737	0.057	1.304	86.7	617.6		1340.4
	8	1225.1	0.0737	0.046	1.602	130.8	722.3		1355.9
	9	1140.4	0.0737	0.038	1.955	194.8	1424.0	609.6	1335.2
	10	1127.5	0.0737	0.038	1.955	194.8	2033.6	1219.2	1322.3
	11	1130.1	0.0737	0.038	1.955	194.8	2592.4	1778.0	1324.9
	12	1112.5	0.0737	0.038	1.955	194.8	3252.8	2438.4	1307.3
	13	1100.9	0.0737	0.038	1.955	194.8	3862.4	3048.0	1295.7

Reading #	Port #	HGL (mm)	Q (m^3/s)	A (m^2)	V=Q/A (m/s)	V^2/2g (mm)	Cum. Hor. Distance (mm)	Cum. Hor. Dist. w/out elbow + red (mm)	EGL HGL+V^2/2g (ft)
3	1	1090.1					0.0		1090.1
	2	1090.1					0.0		1090.1
	3	1089.8					0.0		1089.8
	3.5	1076	0.0315	0.067	0.470	11.3	63.4		1087.3
	4	1076.2	0.0315	0.067	0.470	11.3	149.4		1087.5
	5	1080.9	0.0315	0.067	0.470	11.3	292.6		1092.2
	6	1080.6	0.0315	0.067	0.470	11.3	433.4		1091.9
	7	1071.7	0.0315	0.057	0.558	15.8	617.6		1087.5
	8	1068.8	0.0315	0.046	0.685	23.9	722.3		1092.7
	9	1057.4	0.0315	0.038	0.836	35.6	1424.0	609.6	1093.0
	10	1054.9	0.0315	0.038	0.836	35.6	2033.6	1219.2	1090.5
	11	1054.5	0.0315	0.038	0.836	35.6	2592.4	1778.0	1090.1
	12	1053.0	0.0315	0.038	0.836	35.6	3252.8	2438.4	1088.6
	13	1051.2	0.0315	0.038	0.836	35.6	3862.4	3048.0	1086.8

Reading #	Port #	HGL (mm)	Q (m^3/s)	A (m^2)	V=Q/A (m/s)	V^2/2g (mm)	Cum. Hor. Distance (mm)	Cum. Hor. Dist. w/out elbow + red (mm)	EGL HGL+V^2/2g (mm)
9	1	1459.8					0.0		1459.8
	2	1463.3					0.0		1463.3
	3	1464					0.0		1464.0
	3.5	1335.7	0.0839	0.067	1.252	79.9	63.4		1415.6
	4	1339	0.0839	0.067	1.252	79.9	149.4		1418.9
	5	1376.6	0.0839	0.067	1.252	79.9	292.6		1456.5
	6	1378.8	0.0839	0.067	1.252	79.9	433.4		1458.7
	7	1299.4	0.0839	0.057	1.485	112.4	617.6		1411.8
	8	1266.9	0.0839	0.046	1.824	169.6	722.3		1436.5
	9	1160.8	0.0839	0.038	2.225	252.4	1424.0	609.6	1413.2
	10	1141.8	0.0839	0.038	2.225	252.4	2033.6	1219.2	1394.2
	11	1148.4	0.0839	0.038	2.225	252.4	2592.4	1778.0	1400.8
	12	1123.1	0.0839	0.038	2.225	252.4	3252.8	2438.4	1375.5
	13	1111.0	0.0839	0.038	2.225	252.4	3862.4	3048.0	1363.4

Reading #	Port #	HGL (mm)	Q (m^3/s)	A (m^2)	V=Q/A (m/s)	V^2/2g (mm)	Cum. Hor. Distance (mm)	Cum. Hor. Dist. w/out elbow + red (mm)	EGL HGL+V^2/2g (ft)
4	1	1124.5					0.0		1124.5
	2	1125.6					0.0		1125.6
	3	1126.8					0.0		1126.8
	3.5	1103.6	0.0355	0.067	0.530	14.3	63.4		1117.9
	4	1103.7	0.0355	0.067	0.530	14.3	149.4		1118.0
	5	1110.8	0.0355	0.067	0.530	14.3	292.6		1125.1
	6	1111.1	0.0355	0.067	0.530	14.3	433.4		1125.4
	7	1096.4	0.0355	0.057	0.628	20.1	617.6		1116.5
	8	1090.4	0.0355	0.046	0.772	30.4	722.3		1120.8
	9	1071.2	0.0355	0.038	0.942	45.2	1424.0	609.6	1116.4
	10	1067.2	0.0355	0.038	0.942	45.2	2033.6	1219.2	1112.4
	11	1067.5	0.0355	0.038	0.942	45.2	2592.4	1778.0	1112.7
	12	1063.4	0.0355	0.038	0.942	45.2	3252.8	2438.4	1108.6
	13	1061.4	0.0355	0.038	0.942	45.2	3862.4	3048.0	1106.6

Reading #	Port #	HGL (mm)	Q (m^3/s)	A (m^2)	V=Q/A (m/s)	V^2/2g (mm)	Cum. Hor. Distance (mm)	Cum. Hor. Dist. w/out elbow + red (mm)	EGL HGL+V^2/2g (mm)
10	1	1526.8					0.0		1526.8
	2	1529.6					0.0		1529.6
	3	1530.5					0.0		1530.5
	3.5	1381.1	0.0910	0.067	1.358	94.0	63.4		1475.1
	4	1387.2	0.0910	0.067	1.358	94.0	149.4		1481.2
	5	1434.2	0.0910	0.067	1.358	94.0	292.6		1528.2
	6	1434.1	0.0910	0.067	1.358	94.0	433.4		1528.1
	7	1341.0	0.0910	0.057	1.611	132.2	617.6		1473.2
	8	1302.1	0.0910	0.046	1.978	199.5	722.3		1501.6
	9	1174.4	0.0910	0.038	2.414	297.0	1424.0	609.6	1471.4
	10	1152.8	0.0910	0.038	2.414	297.0	2033.6	1219.2	1449.8
	11	1162.4	0.0910	0.038	2.414	297.0	2592.4	1778.0	1459.4
	12	1133.4	0.0910	0.038	2.414	297.0	3252.8	2438.4	1430.4
	13	1119.5	0.0910	0.038	2.414	297.0	3862.4	3048.0	1416.5

Reading #	Port #	HGL (mm)	Q (m^3/s)	A (m^2)	V=Q/A (m/s)	$V^2/2g$ (mm)	Cum. Hor. Distance (mm)	Cum. Hor. Dist. w/out elbow + red (mm)	EGL $HGL+V^2/2g$ (ft)
5	1	1164.9					0.0		1164.9
	2	1165.6					0.0		1165.6
	3	1165.3					0.0		1165.3
	3.5	1132.9	0.0433	0.067	0.646	21.3	63.4		1154.2
	4	1132.8	0.0433	0.067	0.646	21.3	149.4		1154.1
	5	1143.5	0.0433	0.067	0.646	21.3	292.6		1164.8
	6	1143.6	0.0433	0.067	0.646	21.3	433.4		1164.9
	7	1122.2	0.0433	0.057	0.766	29.9	617.6		1152.1
	8	1113.3	0.0433	0.046	0.941	45.2	722.3		1158.5
	9	1084.8	0.0433	0.038	1.149	67.2	1424.0	609.6	1152.0
	10	1078.9	0.0433	0.038	1.149	67.2	2033.6	1219.2	1146.1
	11	1080.1	0.0433	0.038	1.149	67.2	2592.4	1778.0	1147.3
	12	1073.8	0.0433	0.038	1.149	67.2	3252.8	2438.4	1141.0
	13	1070.2	0.0433	0.038	1.149	67.2	3862.4	3048.0	1137.4

Reading #	Port #	HGL (mm)	Q (m^3/s)	A (m^2)	V=Q/A (m/s)	$V^2/2g$ (mm)	Cum. Hor. Distance (mm)	Cum. Hor. Dist. w/out elbow + red (mm)	EGL $HGL+V^2/2g$ (mm)
6	1	1228.8					0.0		1228.8
	2	1229.9					0.0		1229.9
	3	1230.8					0.0		1230.8
	3.5	1180	0.0539	0.067	0.804	33.0	63.4		1213.0
	4	1181.7	0.0539	0.067	0.804	33.0	149.4		1214.7
	5	1194.4	0.0539	0.067	0.804	33.0	292.6		1227.4
	6	1194.8	0.0539	0.067	0.804	33.0	433.4		1227.8
	7	1161.3	0.0539	0.057	0.954	46.4	617.6		1207.7
	8	1151.1	0.0539	0.046	1.172	70.0	722.3		1221.1
	9	1104.2	0.0539	0.038	1.430	104.2	1424.0	609.6	1208.4
	10	1095.4	0.0539	0.038	1.430	104.2	2033.6	1219.2	1199.6
	11	1097.1	0.0539	0.038	1.430	104.2	2592.4	1778.0	1201.3
	12	1087.2	0.0539	0.038	1.430	104.2	3252.8	2438.4	1191.4
	13	1081.7	0.0539	0.038	1.430	104.2	3862.4	3048.0	1185.9

		Reading #	Q (cms)	Headbox EGL	Projected EGL	He (mm)	Ke = $2g/V^2$+He	Average He	Average Ke
Date:	10/2/1997								
Run#:	25								
Data Collected By:	CRW	1*	0.008	945.0	941.0	4.03	2.79		
Inlet Description:	# 12	2*	0.018	966.2	965.0	1.22	0.15	18.70	0.17
		3*	0.032	994.8	999.0	-4.21	-0.16		
Barrel Slope:	1.50%	4*	0.038	1024.0	1023.1	0.86	0.02	**Average He (no f)**	**Average Ke**
Inlet Diameter:	11.5 inches	5	0.044	1060.5	1052.0	8.49	0.18		
Barrel Length:	12 feet	6	0.060	1134.2	1119.5	14.63	0.17		
Barrel Area:	0.0457	7	0.075	1221.7	1198.9	22.86	0.17	13.66	0.12
Culvert Barrel Dia:	241.3 mm = 9.5 inches	8	0.088	1312.5	1283.7	28.81	0.15		
Reducer # :	4								
Reducer length :	21.25 inches	Note = Readings with a " * " were not included in the average							

Reading #	Q (cms)	He total (mm)	Hf elbow (mm)	Hf reducer (mm)	He (no f) (mm)	Ke (no f)= $2g/V^2$+He
5	0.044	8.49	0.79	1.29	6.40	0.13
6	0.060	14.63	1.41	2.29	10.94	0.13
7	0.075	22.86	2.08	3.38	17.40	0.13
8	0.088	28.81	3.39	5.51	19.92	0.10

Reading #	Port #	HGL (mm)	Q (m^3/s)	A (m^2)	V=Q/A (m/s)	V^2/2g (mm)	Cum. Hor. Distance (mm)	Cum. Hor. Dist. w/out elbow + red (mm)	EGL HGL+V^2/2g (ft)
1	1	946.1					0.0		946.1
	2	944.7					0.0		944.7
	3	944.2					0.0		944.2
	3.5	942.9	0.0077	0.067	0.115	0.7	63.4		943.6
	5	942.3	0.0077	0.067	0.115	0.7	292.6		943.0
	6	941.3	0.0077	0.067	0.115	0.7	433.4		942.0
	7	940.8	0.0077	0.061	0.125	0.8	649.3		941.6
	7.5	940.3	0.0077	0.056	0.138	1.0	789.0		941.3
	8	939.7	0.0077	0.051	0.152	1.2	928.7		940.9
	9	939.3	0.0077	0.046	0.168	1.4	1671.4	609.6	940.7
	10	939.1	0.0077	0.046	0.168	1.4	2281.3	1219.2	940.5
	11	938.8	0.0077	0.046	0.168	1.4	2814.7	1752.6	940.2
	12	938.6	0.0077	0.046	0.168	1.4	3500.5	2438.4	940.0
	13	938.4	0.0077	0.046	0.168	1.4	4110.1	3048.0	939.8

Reading #	Port #	HGL (mm)	Q (m^3/s)	A (m^2)	V=Q/A (m/s)	V^2/2g (mm)	Cum. Hor. Distance (mm)	Cum. Hor. Dist. w/out elbow + red (mm)	EGL HGL+V^2/2g (ft)
2	1	966.4					0.0		966.4
	2	966.2					0.0		966.2
	3	966.1					0.0		966.1
	3.5	960.8	0.0181	0.067	0.270	3.7	63.4		964.5
	5	962.3	0.0181	0.067	0.270	3.7	292.6		966.0
	6	962.4	0.0181	0.067	0.270	3.7	433.4		966.1
	7	960.3	0.0181	0.061	0.295	4.4	649.3		964.7
	7.5	958.9	0.0181	0.056	0.323	5.3	789.0		964.2
	8	958.2	0.0181	0.051	0.358	6.5	928.7		964.7
	9	956.5	0.0181	0.046	0.396	8.0	1671.4	609.6	964.5
	10	955.9	0.0181	0.046	0.396	8.0	2281.3	1219.2	963.9
	11	955.6	0.0181	0.046	0.396	8.0	2814.7	1752.6	963.6
	12	954.8	0.0181	0.046	0.396	8.0	3500.5	2438.4	962.8
	13	954.4	0.0181	0.046	0.396	8.0	4110.1	3048.0	962.4

Reading #	Port #	HGL (mm)	Q (m^3/s)	A (m^2)	V=Q/A (m/s)	V^2/2g (mm)	Cum. Hor. Distance (mm)	Cum. Hor. Dist. w/out elbow + red (mm)	EGL HGL+V^2/2g (ft)
3	1	994.9					0.0		994.9
	2	995					0.0		995.0
	3	994.5					0.0		994.5
	3.5	981.9	0.0324	0.067	0.484	11.9	63.4		993.8
	5	985.8	0.0324	0.067	0.484	11.9	292.6		997.7
	6	986.9	0.0324	0.067	0.484	11.9	433.4		998.8
	7	980.9	0.0324	0.061	0.528	14.2	649.3		995.1
	7.5	977	0.0324	0.056	0.579	17.1	789.0		994.1
	8	975.2	0.0324	0.051	0.640	20.9	928.7		996.1
	9	972.4	0.0324	0.046	0.709	25.6	1671.4	609.6	998.0
	10	971.6	0.0324	0.046	0.709	25.6	2281.3	1219.2	997.2
	11	970.6	0.0324	0.046	0.709	25.6	2814.7	1752.6	996.2
	12	969.4	0.0324	0.046	0.709	25.6	3500.5	2438.4	995.0
	13	968.7	0.0324	0.046	0.709	25.6	4110.1	3048.0	994.3

Reading #	Port #	HGL (mm)	Q (m^3/s)	A (m^2)	V=Q/A (m/s)	V^2/2g (mm)	Cum. Hor. Distance (mm)	Cum. Hor. Dist. w/out elbow + red (mm)	EGL HGL+V^2/2g (ft)
4	1	1023.4					0.0		1023.4
	2	1024.5					0.0		1024.5
	3	1024.1					0.0		1024.1
	3.5	1001.5	0.0380	0.067	0.567	16.4	63.4		1017.9
	5	1008.5	0.0380	0.067	0.567	16.4	292.6		1024.9
	6	1009.8	0.0380	0.067	0.567	16.4	433.4		1026.2
	7	997.7	0.0380	0.061	0.619	19.5	649.3		1017.2
	7.5	993.9	0.0380	0.056	0.679	23.5	789.0		1017.4
	8	990.1	0.0380	0.051	0.751	28.7	928.7		1018.8
	9	986.2	0.0380	0.046	0.832	35.2	1671.4	609.6	1021.4
	10	984.7	0.0380	0.046	0.832	35.2	2281.3	1219.2	1019.9
	11	982.8	0.0380	0.046	0.832	35.2	2814.7	1752.6	1018.0
	12	980.8	0.0380	0.046	0.832	35.2	3500.5	2438.4	1016.0
	13	979.6	0.0380	0.046	0.832	35.2	4110.1	3048.0	1014.8

Reading #	Port #	HGL (mm)	Q (m^3/s)	A (m^2)	V=Q/A (m/s)	V^2/2g (mm)	Cum. Hor. Distance (mm)	Cum. Hor. Dist. w/out elbow + red (mm)	EGL HGL+V^2/2g (mm)
7	1	1218.7					0.0		1218.7
	2	1223.1					0.0		1223.1
	3	1223.4					0.0		1223.4
	3.5	1127.7	0.0750	0.067	1.119	63.9	63.4		1191.6
	5	1154.5	0.0750	0.067	1.119	63.9	292.6		1218.4
	6	1157.6	0.0750	0.067	1.119	63.9	433.4		1221.5
	7	1114.9	0.0750	0.061	1.221	76.0	649.3		1190.9
	7.5	1087	0.0750	0.056	1.339	91.4	789.0		1178.4
	8	1071.1	0.0750	0.051	1.482	112.0	928.7		1183.1
	9	1055.7	0.0750	0.046	1.641	137.3	1671.4	609.6	1193.0
	10	1045.9	0.0750	0.046	1.641	137.3	2281.3	1219.2	1183.2
	11	1045.4	0.0750	0.046	1.641	137.3	2814.7	1752.6	1182.7
	12	1035.3	0.0750	0.046	1.641	137.3	3500.5	2438.4	1172.6
	13	1028.5	0.0750	0.046	1.641	137.3	4110.1	3048.0	1165.8

Reading #	Port #	HGL (mm)	Q (m^3/s)	A (m^2)	V=Q/A (m/s)	V^2/2g (mm)	Cum. Hor. Distance (mm)	Cum. Hor. Dist. w/out elbow + red (mm)	EGL HGL+V^2/2g (mm)
8	1	1309.5					0.0		1309.5
	2	1314.5					0.0		1314.5
	3	1313.6					0.0		1313.6
	3.5	1169.2	0.0882	0.067	1.316	88.3	63.4		1257.5
	5	1216.9	0.0882	0.067	1.316	88.3	292.6		1305.2
	6	1220.5	0.0882	0.067	1.316	88.3	433.4		1308.8
	7	1161.2	0.0882	0.061	1.436	105.2	649.3		1266.4
	7.5	1125.1	0.0882	0.056	1.575	126.4	789.0		1251.5
	8	1098.5	0.0882	0.051	1.743	154.9	928.7		1253.4
	9	1083.2	0.0882	0.046	1.930	189.8	1671.4	609.6	1273.0
	10	1068.6	0.0882	0.046	1.930	189.8	2281.3	1219.2	1258.4
	11	1069.2	0.0882	0.046	1.930	189.8	2814.7	1752.6	1259.0
	12	1051.0	0.0882	0.046	1.930	189.8	3500.5	2438.4	1240.8
	13	1039.2	0.0882	0.046	1.930	189.8	4110.1	3048.0	1229.0

Reading #	Port #	HGL (mm)	Q (m^3/s)	A (m^2)	V=Q/A (m/s)	$V^2/2g$ (mm)	Cum. Hor. Distance (mm)	Cum. Hor. Dist. w/out elbow + red (mm)	EGL $HGL+V^2/2g$ (ft)
5	1	1059.6					0.0		1059.6
	2	1060.6					0.0		1060.6
	3	1061.3					0.0		1061.3
	3.5	1024.1	0.0444	0.067	0.663	22.4	63.4		1046.5
	5	1035.8	0.0444	0.067	0.663	22.4	292.6		1058.2
	6	1037.9	0.0444	0.067	0.663	22.4	433.4		1060.3
	7	1021.6	0.0444	0.061	0.723	26.7	649.3		1048.3
	7.5	1012.3	0.0444	0.056	0.793	32.0	789.0		1044.3
	8	1006.1	0.0444	0.051	0.877	39.2	928.7		1045.3
	9	1001.6	0.0444	0.046	0.972	48.1	1671.4	609.6	1049.7
	10	998.5	0.0444	0.046	0.972	48.1	2281.3	1219.2	1046.6
	11	997.1	0.0444	0.046	0.972	48.1	2814.7	1752.6	1045.2
	12	993.6	0.0444	0.046	0.972	48.1	3500.5	2438.4	1041.7
	13	991.6	0.0444	0.046	0.972	48.1	4110.1	3048.0	1039.7

Reading #	Port #	HGL (mm)	Q (m^3/s)	A (m^2)	V=Q/A (m/s)	$V^2/2g$ (mm)	Cum. Hor. Distance (mm)	Cum. Hor. Dist. w/out elbow + red (mm)	EGL $HGL+V^2/2g$ (mm)
6	1	1133.4					0.0		1133.4
	2	1134.5					0.0		1134.5
	3	1134.6					0.0		1134.6
	3.5	1075	0.0596	0.067	0.890	40.3	63.4		1115.3
	5	1092.1	0.0596	0.067	0.890	40.3	292.6		1132.4
	6	1092.8	0.0596	0.067	0.890	40.3	433.4		1133.1
	7	1064.7	0.0596	0.061	0.971	48.0	649.3		1112.7
	7.5	1047.9	0.0596	0.056	1.064	57.7	789.0		1105.6
	8	1038.2	0.0596	0.051	1.178	70.7	928.7		1108.9
	9	1028.9	0.0596	0.046	1.304	86.7	1671.4	609.6	1115.6
	10	1022.4	0.0596	0.046	1.304	86.7	2281.3	1219.2	1109.1
	11	1021.6	0.0596	0.046	1.304	86.7	2814.7	1752.6	1108.3
	12	1015.0	0.0596	0.046	1.304	86.7	3500.5	2438.4	1101.7
	13	1010.6	0.0596	0.046	1.304	86.7	4110.1	3048.0	1097.3

		Reading #	Q (cms)	Headbox EGL	Projected EGL	He (mm)	Ke = $2g/V^2$He	Average He	Average Ke
Date:	7/21/1997								
Run#:	26								
Data Collected By:	JKL	1*	0.013	1085.9	1083.0	2.97	0.77		
Inlet Description:	# 12	2*	0.023	1110.9	1109.4	1.58	0.13	8.20	0.15
		3	0.034	1148.7	1144.8	3.87	0.14		
Barrel Slope:	1.00%	4	0.044	1188.7	1181.5	7.14	0.15	**Average He (no f)**	**Average Ke (no f)**
Inlet Diameter:	11.5 inches	5	0.051	1221.0	1211.6	9.39	0.15		
Barrel Length:	12 feet	6	0.058	1251.5	1239.1	12.40	0.15	6.44	0.12
Barrel Area:	0.04573								
Culvert Barrel Dia:	241.3 mm = 9.5"								
Reducer # :	5								
Reducer length :	14.8125 inches								

Note = Readings with a " * " were not included in the average

Reading #	Q (cms)	He total (mm)	Hf elbow (mm)	Hf reducer (mm)	He (no f) (mm)	Ke (no f)= $2g/V^2$He
3	0.034	3.87	0.44	0.48	2.95	0.11
4	0.044	7.14	0.70	0.76	5.68	0.12
5	0.051	9.39	1.01	1.10	7.28	0.11
6	0.058	12.40	1.21	1.32	9.87	0.12

Reading #	Port #	HGL (mm)	Q (m^3/s)	A (m^2)	V=Q/A (m/s)	V^2/2g (mm)	Cum. Hor. Distance (mm)	Cum. Hor. Dist. w/out elbow + red (mm)	EGL HGL+V^2/2g (ft)
1	1	1086.2					0.0		1086.2
	2	1085.7					0.0		1085.7
	3	1085.9					0.0		1085.9
	3.5	1082.8	0.0126	0.067	0.188	1.8	63.4		1084.6
	4	1091.8	0.0126	0.067	0.188	1.8	149.4		1093.6
	5	1083.1	0.0126	0.067	0.188	1.8	292.6		1084.9
	6	1083.0	0.0126	0.067	0.188	1.8	433.4		1084.8
	7	1081.9	0.0126	0.061	0.207	2.2	623.9		1084.1
	8	1079.8	0.0126	0.051	0.246	3.1	782.7		1082.9
	9	1079.0	0.0126	0.046	0.276	3.9	1492.3	609.6	1082.9
	10	1078.6	0.0126	0.046	0.276	3.9	2101.9	1219.2	1082.5
	11	1078.4	0.0126	0.046	0.276	3.9	2635.3	1752.6	1082.3
	12	1078.0	0.0126	0.046	0.276	3.9	3321.1	2438.4	1081.9
	13	1078.2	0.0126	0.046	0.276	3.9	3930.7	3048.0	1082.1

Reading #	Port #	HGL (mm)	Q (m^3/s)	A (m^2)	V=Q/A (m/s)	V^2/2g (mm)	Cum. Hor. Distance (mm)	Cum. Hor. Dist. w/out elbow + red (mm)	EGL HGL+V^2/2g (ft)
4	1	1187.8					0.0		1187.8
	2	1188.9					0.0		1188.9
	3	1189.3					0.0		1189.3
	3.5	1155.4	0.0438	0.067	0.654	21.8	63.4		1177.2
	4	1150.2	0.0438	0.067	0.654	21.8	149.4		1172.0
	5	1164.8	0.0438	0.067	0.654	21.8	292.6		1186.6
	6	1165.6	0.0438	0.067	0.654	21.8	433.4		1187.4
	7	1150.9	0.0438	0.061	0.720	26.5	623.9		1177.4
	8	1137.1	0.0438	0.051	0.854	37.2	782.7		1174.3
	9	1132.9	0.0438	0.046	0.958	46.8	1492.3	609.6	1179.7
	10	1129.7	0.0438	0.046	0.958	46.8	2101.9	1219.2	1176.5
	11	1128.7	0.0438	0.046	0.958	46.8	2635.3	1752.6	1175.5
	12	1125.6	0.0438	0.046	0.958	46.8	3321.1	2438.4	1172.4
	13	1124.0	0.0438	0.046	0.958	46.8	3930.7	3048.0	1170.8

Reading #	Port #	HGL (mm)	Q (m^3/s)	A (m^2)	V=Q/A (m/s)	V^2/2g (mm)	Cum. Hor. Distance (mm)	Cum. Hor. Dist. w/out elbow + red (mm)	EGL HGL+V^2/2g (ft)
2	1	1110.8					0.0		1110.8
	2	1110.8					0.0		1110.8
	3	1111.2					0.0		1111.2
	3.5	1102.2	0.0225	0.067	0.336	5.7	63.4		1107.9
	4	1105.7	0.0225	0.067	0.336	5.7	149.4		1111.4
	5	1104.9	0.0225	0.067	0.336	5.7	292.6		1110.6
	6	1105.0	0.0225	0.067	0.336	5.7	433.4		1110.7
	7	1101.1	0.0225	0.061	0.370	7.0	623.9		1108.1
	8	1098.2	0.0225	0.051	0.439	9.8	782.7		1108.0
	9	1096.3	0.0225	0.046	0.492	12.4	1492.3	609.6	1108.7
	10	1095.7	0.0225	0.046	0.492	12.4	2101.9	1219.2	1108.1
	11	1095.2	0.0225	0.046	0.492	12.4	2635.3	1752.6	1107.6
	12	1094.4	0.0225	0.046	0.492	12.4	3321.1	2438.4	1106.8
	13	1093.7	0.0225	0.046	0.492	12.4	3930.7	3048.0	1106.1

Reading #	Port #	HGL (mm)	Q (m^3/s)	A (m^2)	V=Q/A (m/s)	V^2/2g (mm)	Cum. Hor. Distance (mm)	Cum. Hor. Dist. w/out elbow + red (mm)	EGL HGL+V^2/2g (ft)
5	1	1220.1					0.0		1220.1
	2	1221.5					0.0		1221.5
	3	1221.5					0.0		1221.5
	3.5	1173.8	0.0510	0.067	0.761	29.5	63.4		1203.3
	4	1172.7	0.0510	0.067	0.761	29.5	149.4		1202.2
	5	1189.1	0.0510	0.067	0.761	29.5	292.6		1218.6
	6	1189.1	0.0510	0.067	0.761	29.5	433.4		1218.6
	7	1168.8	0.0510	0.061	0.839	35.9	623.9		1204.7
	8	1152.3	0.0510	0.051	0.994	50.4	782.7		1202.7
	9	1146.0	0.0510	0.046	1.116	63.5	1492.3	609.6	1209.5
	10	1140.6	0.0510	0.046	1.116	63.5	2101.9	1219.2	1204.1
	11	1138.8	0.0510	0.046	1.116	63.5	2635.3	1752.6	1202.3
	12	1135.6	0.0510	0.046	1.116	63.5	3321.1	2438.4	1199.1
	13	1132.6	0.0510	0.046	1.116	63.5	3930.7	3048.0	1196.1

Reading #	Port #	HGL (mm)	Q (m^3/s)	A (m^2)	V=Q/A (m/s)	V^2/2g (mm)	Cum. Hor. Distance (mm)	Cum. Hor. Dist. w/out elbow + red (mm)	EGL HGL+V^2/2g (ft)
3	1	1148.4					0.0		1148.4
	2	1149					0.0		1149.0
	3	1148.6					0.0		1148.6
	3.5	1128.8	0.0337	0.067	0.503	12.9	63.4		1141.7
	4	1125.6	0.0337	0.067	0.503	12.9	149.4		1138.5
	5	1135.3	0.0337	0.067	0.503	12.9	292.6		1148.2
	6	1136.4	0.0337	0.067	0.503	12.9	433.4		1149.3
	7	1126.4	0.0337	0.061	0.554	15.7	623.9		1142.1
	8	1119.0	0.0337	0.051	0.657	22.0	782.7		1141.0
	9	1116.0	0.0337	0.046	0.737	27.7	1492.3	609.6	1143.7
	10	1114.1	0.0337	0.046	0.737	27.7	2101.9	1219.2	1141.8
	11	1113.1	0.0337	0.046	0.737	27.7	2635.3	1752.6	1140.8
	12	1111.1	0.0337	0.046	0.737	27.7	3321.1	2438.4	1138.8
	13	1110.6	0.0337	0.046	0.737	27.7	3930.7	3048.0	1138.3

Reading #	Port #	HGL (mm)	Q (m^3/s)	A (m^2)	V=Q/A (m/s)	V^2/2g (mm)	Cum. Hor. Distance (mm)	Cum. Hor. Dist. w/out elbow + red (mm)	EGL HGL+V^2/2g (mm)
6	1	1250.1					0.0		1250.1
	2	1252.4					0.0		1252.4
	3	1252					0.0		1252.0
	3.5	1194.9	0.0575	0.067	0.858	37.5	63.4		1232.4
	4	1207.3	0.0575	0.067	0.858	37.5	149.4		1244.8
	5	1212.1	0.0575	0.067	0.858	37.5	292.6		1249.6
	6	1211.8	0.0575	0.067	0.858	37.5	433.4		1249.3
	7	1185.3	0.0575	0.061	0.946	45.6	623.9		1230.9
	8	1165.9	0.0575	0.051	1.121	64.0	782.7		1229.9
	9	1155.2	0.0575	0.046	1.258	80.7	1492.3	609.6	1235.9
	10	1149.5	0.0575	0.046	1.258	80.7	2101.9	1219.2	1230.2
	11	1148.3	0.0575	0.046	1.258	80.7	2635.3	1752.6	1229.0
	12	1142.9	0.0575	0.046	1.258	80.7	3321.1	2438.4	1223.6
	13	1139.5	0.0575	0.046	1.258	80.7	3930.7	3048.0	1220.2

		Reading #	Q	Headbox	Projected	He	Ke =	Average	Average
Date:	12/31/1997								
Run#:	Hw 2		(cms)	EGL	EGL	(mm)	2g/V2*He	He	Ke
Data Collected By:	DAB	1*	0.0192	953.3	950.8	2.53	0.60		
Inlet Description:	Headwall	2*	0.0327	973.9	971.6	2.26	0.19	44.56	0.56
		3*	0.0382	994.9	986.3	8.65	0.52		
Barrel Slope:	3.50%	4	0.0464	1021.0	1008.1	12.91	0.53		
Inlet Diameter:	11.5 inches	5	0.0575	1053.3	1031.5	21.75	0.58		
Barrel Length:	12.9 feet	6	0.0680	1089.8	1059.5	30.29	0.58		
Barrel Area:	0.067	7	0.0764	1119.3	1082.6	36.66	0.55		
Culvert Barrel Dia:	11.5 in. = 292.1 mm	8	0.0861	1157.1	1111.2	45.94	0.55		
Reducer # :	Na	9	0.0955	1201.1	1141.7	59.43	0.57		
Reducer length :	Na	10	0.1038	1239.3	1170.6	68.69	0.56		
		11	0.1117	1281.4	1200.6	80.82	0.57		

Note = Readings with a " * " were not included in the average

Reading #	Port #	HGL (mm)	Q (m3/s)	A (m2)	V=Q/A (m/s)	V2/2g (mm)	Cum. Hor. Distance (mm)	EGL HGL+V2/2g (ft)
1	1	953.6					0.0	953.6
	2	953.2					0.0	953.2
	3	953.2					0.0	953.2
	8	946.5	0.0192	0.0670	0.2866	4.186	609.6	950.7
	9	946.0	0.0192	0.0670	0.2866	4.186	1219.2	950.2
	10	945.9	0.0192	0.0670	0.2866	4.186	1828.8	950.1
	11	945.8	0.0192	0.0670	0.2866	4.186	2438.4	950.0
	12	945.3	0.0192	0.0670	0.2866	4.186	3048.0	949.5
	13	945.3	0.0192	0.0670	0.2866	4.186	3657.6	949.5

Reading #	Port #	HGL (mm)	Q (m3/s)	A (m2)	V=Q/A (m/s)	V2/2g (mm)	Cum. Hor. Distance (mm)	EGL HGL+V2/2g (ft)
2	1	973.8					0.0	973.8
	2	973.7					0.0	973.7
	3	974.2					0.0	974.2
	8	959.6	0.0327	0.0670	0.4881	12.141	609.6	971.7
	9	958.3	0.0327	0.0670	0.4881	12.141	1219.2	970.4
	10	958.1	0.0327	0.0670	0.4881	12.141	1828.8	970.2
	11	958.1	0.0327	0.0670	0.4881	12.141	2438.4	970.2
	12	957.3	0.0327	0.0670	0.4881	12.141	3048.0	969.4
	13	957.5	0.0327	0.0670	0.4881	12.141	3657.6	969.6

Reading #	Port #	HGL (mm)	Q (m3/s)	A (m2)	V=Q/A (m/s)	V2/2g (mm)	Cum. Hor. Distance (mm)	EGL HGL+V2/2g (ft)
3	1	994.5					0.0	994.5
	2	995					0.0	995.0
	3	995.3					0.0	995.3
	8	970.1	0.0382	0.0670	0.5701	16.568	609.6	986.7
	9	968.6	0.0382	0.0670	0.5701	16.568	1219.2	985.2
	10	968.6	0.0382	0.0670	0.5701	16.568	1828.8	985.2
	11	969.1	0.0382	0.0670	0.5701	16.568	2438.4	985.7
	12	968.7	0.0382	0.0670	0.5701	16.568	3048.0	985.3
	13	968.3	0.0382	0.0670	0.5701	16.568	3657.6	984.9

Reading #	Port #	HGL (mm)	Q (m3/s)	A (m2)	V=Q/A (m/s)	V2/2g (mm)	Cum. Hor. Distance (mm)	EGL HGL+V2/2g (ft)
4	1	1020.9					0.0	1020.9
	2	1021					0.0	1021.0
	3	1021.1					0.0	1021.1
	8	983	0.0464	0.0670	0.6925	24.445	609.6	1007.4
	9	981.5	0.0464	0.0670	0.6925	24.445	1219.2	1005.9
	10	980.5	0.0464	0.0670	0.6925	24.445	1828.8	1004.9
	11	979.4	0.0464	0.0670	0.6925	24.445	2438.4	1003.8
	12	978.1	0.0464	0.0670	0.6925	24.445	3048.0	1002.5
	13	978.2	0.0464	0.0670	0.6925	24.445	3657.6	1002.6

Reading #	Port #	HGL (mm)	Q (m3/s)	A (m2)	V=Q/A (m/s)	V2/2g (mm)	Cum. Hor. Distance (mm)	EGL HGL+V2/2g (ft)
5	1	1052.6					0.0	1052.6
	2	1053.4					0.0	1053.4
	3	1053.8					0.0	1053.8
	8	994.3	0.0575	0.0670	0.8582	37.539	609.6	1031.8
	9	990.6	0.0575	0.0670	0.8582	37.539	1219.2	1028.1
	10	991.0	0.0575	0.0670	0.8582	37.539	1828.8	1028.5
	11	989.9	0.0575	0.0670	0.8582	37.539	2438.4	1027.4
	12	990.2	0.0575	0.0670	0.8582	37.539	3048.0	1027.7
	13	988.2	0.0575	0.0670	0.8582	37.539	3657.6	1025.7

Reading #	Port #	HGL (mm)	Q (m3/s)	A (m2)	V=Q/A (m/s)	V2/2g (mm)	Cum. Hor. Distance (mm)	EGL HGL+V2/2g (ft)
8	1	1153.5					0.0	1153.5
	2	1158.4					0.0	1158.4
	3	1159.5					0.0	1159.5
	8	1028.3	0.0861	0.0670	1.2851	84.170	609.6	1112.5
	9	1018.7	0.0861	0.0670	1.2851	84.170	1219.2	1102.9
	10	1016.4	0.0861	0.0670	1.2851	84.170	1828.8	1100.6
	11	1016.9	0.0861	0.0670	1.2851	84.170	2438.4	1101.1
	12	1015.3	0.0861	0.0670	1.2851	84.170	3048.0	1099.5
	13	1012.1	0.0861	0.0670	1.2851	84.170	3657.6	1096.3

Reading #	Port #	HGL (mm)	Q (m3/s)	A (m2)	V=Q/A (m/s)	V2/2g (mm)	Cum. Hor. Distance (mm)	EGL HGL+V2/2g (ft)
9	1	1198.0					0.0	1198.0
	2	1203					0.0	1203.0
	3	1202.4					0.0	1202.4
	8	1038.4	0.0955	0.0670	1.4254	103.552	609.6	1142.0
	9	1029.6	0.0955	0.0670	1.4254	103.552	1219.2	1133.2
	10	1028.7	0.0955	0.0670	1.4254	103.552	1828.8	1132.3
	11	1027.2	0.0955	0.0670	1.4254	103.552	2438.4	1130.8
	12	1024.5	0.0955	0.0670	1.4254	103.552	3048.0	1128.1
	13	1022.4	0.0955	0.0670	1.4254	103.552	3657.6	1126.0

Reading #	Port #	HGL (mm)	Q (m3/s)	A (m2)	V=Q/A (m/s)	V2/2g (mm)	Cum. Hor. Distance (mm)	EGL HGL+V2/2g (ft)
10	1	1236.0					0.0	1236.0
	2	1239.9					0.0	1239.9
	3	1241.9					0.0	1241.9
	8	1049.1	0.1038	0.0670	1.5493	122.334	609.6	1171.4
	9	1039.3	0.1038	0.0670	1.5493	122.334	1219.2	1161.6
	10	1036.4	0.1038	0.0670	1.5493	122.334	1828.8	1158.7
	11	1034.8	0.1038	0.0670	1.5493	122.334	2438.4	1157.1
	12	1031.2	0.1038	0.0670	1.5493	122.334	3048.0	1153.5
	13	1032.1	0.1038	0.0670	1.5493	122.334	3657.6	1154.4

Reading #	Port #	HGL (mm)	Q (m3/s)	A (m2)	V=Q/A (m/s)	V2/2g (mm)	Cum. Hor. Distance (mm)	EGL HGL+V2/2g (ft)
11	1	1279.9					0.0	1279.9
	2	1281.7					0.0	1281.7
	3	1282.7					0.0	1282.7
	8	1058.2	0.1117	0.0670	1.6672	141.663	609.6	1199.9
	9	1050.0	0.1117	0.0670	1.6672	141.663	1219.2	1191.7
	10	1046.0	0.1117	0.0670	1.6672	141.663	1828.8	1187.7
	11	1046.6	0.1117	0.0670	1.6672	141.663	2438.4	1188.3
	12	1042.2	0.1117	0.0670	1.6672	141.663	3048.0	1183.9
	13	1038.8	0.1117	0.0670	1.6672	141.663	3657.6	1180.5

Reading #	Port #	HGL (mm)	Q (m3/s)	A (m2)	V=Q/A (m/s)	V2/2g (mm)	Cum. Hor. Distance (mm)	EGL HGL+V2/2g (ft)
6	1	1088.6					0.0	1088.6
	2	1090					0.0	1090.0
	3	1090.7					0.0	1090.7
	8	1007.5	0.0680	0.0670	1.0149	52.501	609.6	1060.0
	9	1002.3	0.0680	0.0670	1.0149	52.501	1219.2	1054.8
	10	999.9	0.0680	0.0670	1.0149	52.501	1828.8	1052.4
	11	1000.7	0.0680	0.0670	1.0149	52.501	2438.4	1053.2
	12	998.6	0.0680	0.0670	1.0149	52.501	3048.0	1051.1
	13	997.9	0.0680	0.0670	1.0149	52.501	3657.6	1050.4

Reading #	Port #	HGL (mm)	Q (m3/s)	A (m2)	V=Q/A (m/s)	V2/2g (mm)	Cum. Hor. Distance (mm)	EGL HGL+V2/2g (ft)
7	1	1117.9					0.0	1117.9
	2	1119.4					0.0	1119.4
	3	1120.5					0.0	1120.5
	8	1016.7	0.0764	0.0670	1.1403	66.273	609.6	1083.0
	9	1011.0	0.0764	0.0670	1.1403	66.273	1219.2	1077.3
	10	1009.7	0.0764	0.0670	1.1403	66.273	1828.8	1076.0
	11	1008.5	0.0764	0.0670	1.1403	66.273	2438.4	1074.8
	12	1007.9	0.0764	0.0670	1.1403	66.273	3048.0	1074.2
	13	1006.1	0.0764	0.0670	1.1403	66.273	3657.6	1072.4

		Reading #	Q (cms)	Headbox EGL	Projected EGL	He (mm)	Ke = $2g/V^2$+He	Average He	Average Ke
Date:	12/22/1997								
Run#:	Bm 8								
Data Collected By:	DAB	1*	0.020	961.3	960.0	1.29	0.28		
Inlet Description:	# 13	2*	0.029	980.5	977.5	3.01	0.31	26.01	0.33
		3*	0.037	997.4	992.7	4.68	0.30		
Barrel Slope:	5.00%	4	0.046	1019.2	1012.1	7.02	0.29		
Inlet Diameter:	11.5 inches	5	0.058	1048.1	1036.3	11.85	0.32		
Barrel Length:	12.9 feet	6	0.068	1082.9	1064.8	18.11	0.34		
Barrel Area:	0.067	7	0.077	1113.6	1091.0	22.55	0.34		
Culvert Barrel Dia:	11.5 in. = 292.1 mm	8	0.086	1151.8	1120.6	31.18	0.37		
Reducer # :	Na	9	0.097	1191.2	1159.2	31.92	0.30		
Reducer length :	Na	10	0.104	1227.9	1189.1	38.75	0.31		
		11	0.112	1261.4	1214.6	46.73	0.33		

Note = Readings with a " * " were not included in the average

Reading #	Port #	HGL (mm)	Q (m^3/s)	A (m^2)	V=Q/A (m/s)	$V^2/2g$ (mm)	Cum. Hor. Distance (mm)	EGL $HGL+V^2/2g$ (ft)
1	1	961.4					0.0	961.4
	2	961.3					0.0	961.3
	3	961.2					0.0	961.2
	8	955.0	0.0203	0.067	0.303	4.7	609.6	959.7
	9	954.9	0.0203	0.067	0.303	4.7	1219.2	959.6
	10	954.7	0.0203	0.067	0.303	4.7	1828.8	959.4
	11	953.7	0.0203	0.067	0.303	4.7	2438.4	958.4
	12	953.9	0.0203	0.067	0.303	4.7	3048.0	958.6
	13	953.8	0.0203	0.067	0.303	4.7	3657.6	958.5

Reading #	Port #	HGL (mm)	Q (m^3/s)	A (m^2)	V=Q/A (m/s)	$V^2/2g$ (mm)	Cum. Hor. Distance (mm)	EGL $HGL+V^2/2g$ (ft)
2	1	980.6					0.0	980.6
	2	980.4					0.0	980.4
	3	980.6					0.0	980.6
	8	967.8	0.0294	0.067	0.439	9.8	609.6	977.6
	9	966.5	0.0294	0.067	0.439	9.8	1219.2	976.3
	10	966.2	0.0294	0.067	0.439	9.8	1828.8	976.0
	11	964.3	0.0294	0.067	0.439	9.8	2438.4	974.1
	12	965.2	0.0294	0.067	0.439	9.8	3048.0	975.0
	13	965.3	0.0294	0.067	0.439	9.8	3657.6	975.1

Reading #	Port #	HGL (mm)	Q (m^3/s)	A (m^2)	V=Q/A (m/s)	$V^2/2g$ (mm)	Cum. Hor. Distance (mm)	EGL $HGL+V^2/2g$ (ft)
3	1	997.7					0.0	997.7
	2	997.2					0.0	997.2
	3	997.3					0.0	997.3
	8	977.0	0.0372	0.067	0.555	15.7	609.6	992.7
	9	975.2	0.0372	0.067	0.555	15.7	1219.2	990.9
	10	975.0	0.0372	0.067	0.555	15.7	1828.8	990.7
	11	973.5	0.0372	0.067	0.555	15.7	2438.4	989.2
	12	974.4	0.0372	0.067	0.555	15.7	3048.0	990.1
	13	973.2	0.0372	0.067	0.555	15.7	3657.6	988.9

Reading #	Port #	HGL (mm)	Q (m^3/s)	A (m^2)	V=Q/A (m/s)	$V^2/2g$ (mm)	Cum. Hor. Distance (mm)	EGL $HGL+V^2/2g$ (ft)
4	1	1018.6					0.0	1018.6
	2	1019.9					0.0	1019.9
	3	1019.0					0.0	1019.0
	8	987.6	0.0462	0.067	0.690	24.2	609.6	1011.8
	9	985.1	0.0462	0.067	0.690	24.2	1219.2	1009.3
	10	985.1	0.0462	0.067	0.690	24.2	1828.8	1009.3
	11	982.7	0.0462	0.067	0.690	24.2	2438.4	1006.9
	12	983.3	0.0462	0.067	0.690	24.2	3048.0	1007.5
	13	981.9	0.0462	0.067	0.690	24.2	3657.6	1006.1

Reading #	Port #	HGL (mm)	Q (m^3/s)	A (m^2)	V=Q/A (m/s)	$V^2/2g$ (mm)	Cum. Hor. Distance (mm)	EGL $HGL+V^2/2g$ (ft)
5	1	1047.8					0.0	1047.8
	2	1047.1					0.0	1047.1
	3	1049.5					0.0	1049.5
	8	999.0	0.0575	0.067	0.858	37.5	609.6	1036.5
	9	995.6	0.0575	0.067	0.858	37.5	1219.2	1033.1
	10	995.1	0.0575	0.067	0.858	37.5	1828.8	1032.6
	11	991.9	0.0575	0.067	0.858	37.5	2438.4	1029.4
	12	993.4	0.0575	0.067	0.858	37.5	3048.0	1030.9
	13	992.7	0.0575	0.067	0.858	37.5	3657.6	1030.2

Reading #	Port #	HGL (mm)	Q (m^3/s)	A (m^2)	V=Q/A (m/s)	$V^2/2g$ (mm)	Cum. Hor. Distance (mm)	EGL $HGL+V^2/2g$ (ft)
6	1	1082.6					0.0	1082.6
	2	1083.8					0.0	1083.8
	3	1082.4					0.0	1082.4
	8	1013.6	0.0680	0.067	1.015	52.5	609.6	1066.1
	9	1007.0	0.0680	0.067	1.015	52.5	1219.2	1059.5
	10	1007.3	0.0680	0.067	1.015	52.5	1828.8	1059.8
	11	1003.3	0.0680	0.067	1.015	52.5	2438.4	1055.8
	12	1004.8	0.0680	0.067	1.015	52.5	3048.0	1057.3
	13	1004.6	0.0680	0.067	1.015	52.5	3657.6	1057.1

Reading #	Port #	HGL (mm)	Q (m^3/s)	A (m^2)	V=Q/A (m/s)	$V^2/2g$ (mm)	Cum. Hor. Distance (mm)	EGL $HGL+V^2/2g$ (ft)
7	1	1112.6					0.0	1112.6
	2	1112.5					0.0	1112.5
	3	1115.7					0.0	1115.7
	8	1025.6	0.0766	0.067	1.143	66.6	609.6	1092.2
	9	1016.4	0.0766	0.067	1.143	66.6	1219.2	1083.0
	10	1019.1	0.0766	0.067	1.143	66.6	1828.8	1085.7
	11	1013.2	0.0766	0.067	1.143	66.6	2438.4	1079.8
	12	1013.5	0.0766	0.067	1.143	66.6	3048.0	1080.1
	13	1013.4	0.0766	0.067	1.143	66.6	3657.6	1080.0

Reading #	Port #	HGL (mm)	Q (m^3/s)	A (m^2)	V=Q/A (m/s)	$V^2/2g$ (mm)	Cum. Hor. Distance (mm)	EGL $HGL+V^2/2g$ (ft)
8	1	1150.1					0.0	1150.1
	2	1151.7					0.0	1151.7
	3	1153.5					0.0	1153.5
	8	1037.1	0.0864	0.067	1.290	84.8	609.6	1121.9
	9	1028.7	0.0864	0.067	1.290	84.8	1219.2	1113.5
	10	1027.9	0.0864	0.067	1.290	84.8	1828.8	1112.7
	11	1023.4	0.0864	0.067	1.290	84.8	2438.4	1108.2
	12	1024.2	0.0864	0.067	1.290	84.8	3048.0	1109.0
	13	1024.2	0.0864	0.067	1.290	84.8	3657.6	1109.0

Reading #	Port #	HGL (mm)	Q (m^3/s)	A (m^2)	V=Q/A (m/s)	$V^2/2g$ (mm)	Cum. Hor. Distance (mm)	EGL $HGL+V^2/2g$ (ft)
9	1	1189.3					0.0	1189.3
	2	1192.7					0.0	1192.7
	3	1191.5					0.0	1191.5
	8	1053.4	0.0966	0.067	1.442	106.0	609.6	1159.4
	9	1043.0	0.0966	0.067	1.442	106.0	1219.2	1149.0
	10	1040.5	0.0966	0.067	1.442	106.0	1828.8	1146.5
	11	1030.8	0.0966	0.067	1.442	106.0	2438.4	1136.8
	12	1033.2	0.0966	0.067	1.442	106.0	3048.0	1139.2
	13	1032.4	0.0966	0.067	1.442	106.0	3657.6	1138.4

Reading #	Port #	HGL (mm)	Q (m^3/s)	A (m^2)	V=Q/A (m/s)	$V^2/2g$ (mm)	Cum. Hor. Distance (mm)	EGL $HGL+V^2/2g$ (ft)
10	1	1224.2					0.0	1224.2
	2	1230.1					0.0	1230.1
	3	1229.4					0.0	1229.4
	8	1068.1	0.1042	0.067	1.555	123.3	609.6	1191.4
	9	1051.5	0.1042	0.067	1.555	123.3	1219.2	1174.8
	10	1047.6	0.1042	0.067	1.555	123.3	1828.8	1170.9
	11	1037.8	0.1042	0.067	1.555	123.3	2438.4	1161.1
	12	1039.1	0.1042	0.067	1.555	123.3	3048.0	1162.4
	13	1040.7	0.1042	0.067	1.555	123.3	3657.6	1164.0

Reading #	Port #	HGL (mm)	Q (m^3/s)	A (m^2)	V=Q/A (m/s)	$V^2/2g$ (mm)	Cum. Hor. Distance (mm)	EGL $HGL+V^2/2g$ (ft)
11	1	1255.8					0.0	1255.8
	2	1262.5					0.0	1262.5
	3	1265.8					0.0	1265.8
	8	1072.8	0.1118	0.067	1.669	141.9	609.6	1214.7
	9	1061.6	0.1118	0.067	1.669	141.9	1219.2	1203.5
	10	1054.5	0.1118	0.067	1.669	141.9	1828.8	1196.4
	11	1047.6	0.1118	0.067	1.669	141.9	2438.4	1189.5
	12	1050.0	0.1118	0.067	1.669	141.9	3048.0	1191.9
	13	1046.8	0.1118	0.067	1.669	141.9	3657.6	1188.7

		Reading #	Q (cms)	Headbox EGL	Projected EGL	He (mm)	Ke = $2g/V^2$+He	Average He	Average Ke
Date:	12/29/1997								
Run#:	Bm 7								
Data Collected By:	DAB	1*	0.020	953.4	951.9	1.50	0.34		
Inlet Description:	# 13	2*	0.033	970.9	972.1	-1.20	-0.10	24.35	0.31
		3*	0.037	990.3	986.2	4.10	0.27		
Barrel Slope:	3.50%	4	0.045	1011.9	1005.3	6.65	0.29		
Inlet Diameter:	11.5 inches	5	0.056	1041.9	1030.6	11.22	0.32		
Barrel Length:	12.9 feet	6	0.067	1076.3	1060.4	15.90	0.31		
Barrel Area:	0.067	7	0.076	1106.8	1085.3	21.54	0.33		
Culvert Barrel Dia:	11.5 in. = 292.1 mm	8	0.086	1143.3	1115.7	27.61	0.33		
Reducer # :	Na	9	0.095	1182.7	1152.1	30.58	0.30		
Reducer length :	Na	10	0.103	1217.1	1180.0	37.10	0.31		
		11	0.111	1251.9	1207.7	44.24	0.32		

Note = Readings with a " * " were not included in the average

Reading #	Port #	HGL (mm)	Q (m^3/s)	A (m^2)	V=Q/A (m/s)	V^2/2g (mm)	Cum. Hor. Distance (mm)	EGL HGL+V^2/2g (ft)
1	1	953.3					0.0	953.3
	2	953.3					0.0	953.3
	3	953.5					0.0	953.5
	8	947.8	0.0196	0.067	0.293	4.4	609.6	952.2
	9	946.7	0.0196	0.067	0.293	4.4	1219.2	951.1
	10	946.1	0.0196	0.067	0.293	4.4	1828.8	950.5
	11	946.1	0.0196	0.067	0.293	4.4	2438.4	950.5
	12	945.9	0.0196	0.067	0.293	4.4	3048.0	950.3
	13	946.2	0.0196	0.067	0.293	4.4	3657.6	950.6

Reading #	Port #	HGL (mm)	Q (m^3/s)	A (m^2)	V=Q/A (m/s)	V^2/2g (mm)	Cum. Hor. Distance (mm)	EGL HGL+V^2/2g (ft)
2	1	970.7					0.0	970.7
	2	971.3					0.0	971.3
	3	970.6					0.0	970.6
	8	959.8	0.0328	0.067	0.490	12.2	609.6	972.0
	9	959.0	0.0328	0.067	0.490	12.2	1219.2	971.2
	10	958.2	0.0328	0.067	0.490	12.2	1828.8	970.4
	11	957.5	0.0328	0.067	0.490	12.2	2438.4	969.7
	12	957.5	0.0328	0.067	0.490	12.2	3048.0	969.7
	13	957.7	0.0328	0.067	0.490	12.2	3657.6	969.9

Reading #	Port #	HGL (mm)	Q (m^3/s)	A (m^2)	V=Q/A (m/s)	V^2/2g (mm)	Cum. Hor. Distance (mm)	EGL HGL+V^2/2g (ft)
3	1	990.0					0.0	990.0
	2	991.0					0.0	991.0
	3	990.0					0.0	990.0
	8	971.1	0.0366	0.067	0.546	15.2	609.6	986.3
	9	969.4	0.0366	0.067	0.546	15.2	1219.2	984.6
	10	969.1	0.0366	0.067	0.546	15.2	1828.8	984.3
	11	967.7	0.0366	0.067	0.546	15.2	2438.4	982.9
	12	967.8	0.0366	0.067	0.546	15.2	3048.0	983.0
	13	968.0	0.0366	0.067	0.546	15.2	3657.6	983.2

Reading #	Port #	HGL (mm)	Q (m^3/s)	A (m^2)	V=Q/A (m/s)	V^2/2g (mm)	Cum. Hor. Distance (mm)	EGL HGL+V^2/2g (ft)
4	1	1011.6					0.0	1011.6
	2	1012.3					0.0	1012.3
	3	1011.9					0.0	1011.9
	8	982.0	0.0450	0.067	0.672	23.0	609.6	1005.0
	9	980.1	0.0450	0.067	0.672	23.0	1219.2	1003.1
	10	979.2	0.0450	0.067	0.672	23.0	1828.8	1002.2
	11	978.5	0.0450	0.067	0.672	23.0	2438.4	1001.5
	12	978.3	0.0450	0.067	0.672	23.0	3048.0	1001.3
	13	977.0	0.0450	0.067	0.672	23.0	3657.6	1000.0

Reading #	Port #	HGL (mm)	Q (m^3/s)	A (m^2)	V=Q/A (m/s)	V^2/2g (mm)	Cum. Hor. Distance (mm)	EGL HGL+V^2/2g (ft)
5	1	1041.0					0.0	1041.0
	2	1042.4					0.0	1042.4
	3	1042.2					0.0	1042.2
	8	996.0	0.0557	0.067	0.831	35.2	609.6	1031.2
	9	991.7	0.0557	0.067	0.831	35.2	1219.2	1026.9
	10	991.3	0.0557	0.067	0.831	35.2	1828.8	1026.5
	11	990.8	0.0557	0.067	0.831	35.2	2438.4	1026.0
	12	989.8	0.0557	0.067	0.831	35.2	3048.0	1025.0
	13	989.4	0.0557	0.067	0.831	35.2	3657.6	1024.6

Reading #	Port #	HGL (mm)	Q (m^3/s)	A (m^2)	V=Q/A (m/s)	V^2/2g (mm)	Cum. Hor. Distance (mm)	EGL HGL+V^2/2g (ft)
8	1	1141.2					0.0	1141.2
	2	1143.3					0.0	1143.3
	3	1145.5					0.0	1145.5
	8	1033.5	0.0856	0.067	1.278	83.2	609.6	1116.7
	9	1024.7	0.0856	0.067	1.278	83.2	1219.2	1107.9
	10	1025.2	0.0856	0.067	1.278	83.2	1828.8	1108.4
	11	1023.7	0.0856	0.067	1.278	83.2	2438.4	1106.9
	12	1020.5	0.0856	0.067	1.278	83.2	3048.0	1103.7
	13	1020.7	0.0856	0.067	1.278	83.2	3657.6	1103.9

Reading #	Port #	HGL (mm)	Q (m^3/s)	A (m^2)	V=Q/A (m/s)	V^2/2g (mm)	Cum. Hor. Distance (mm)	EGL HGL+V^2/2g (ft)
9	1	1180.6					0.0	1180.6
	2	1183.1					0.0	1183.1
	3	1184.3					0.0	1184.3
	8	1051.7	0.0950	0.067	1.418	102.5	609.6	1154.2
	9	1037.5	0.0950	0.067	1.418	102.5	1219.2	1140.0
	10	1033.7	0.0950	0.067	1.418	102.5	1828.8	1136.2
	11	1031.7	0.0950	0.067	1.418	102.5	2438.4	1134.2
	12	1029.4	0.0950	0.067	1.418	102.5	3048.0	1131.9
	13	1028.6	0.0950	0.067	1.418	102.5	3657.6	1131.1

Reading #	Port #	HGL (mm)	Q (m^3/s)	A (m^2)	V=Q/A (m/s)	V^2/2g (mm)	Cum. Hor. Distance (mm)	EGL HGL+V^2/2g (ft)
10	1	1213.4					0.0	1213.4
	2	1219.4					0.0	1219.4
	3	1218.4					0.0	1218.4
	8	1061.3	0.1031	0.067	1.539	120.7	609.6	1182.0
	9	1045.2	0.1031	0.067	1.539	120.7	1219.2	1165.9
	10	1041.7	0.1031	0.067	1.539	120.7	1828.8	1162.4
	11	1039.7	0.1031	0.067	1.539	120.7	2438.4	1160.4
	12	1037.4	0.1031	0.067	1.539	120.7	3048.0	1158.1
	13	1034.4	0.1031	0.067	1.539	120.7	3657.6	1155.1

Reading #	Port #	HGL (mm)	Q (m^3/s)	A (m^2)	V=Q/A (m/s)	V^2/2g (mm)	Cum. Hor. Distance (mm)	EGL HGL+V^2/2g (ft)
11	1	1247.9					0.0	1247.9
	2	1253.7					0.0	1253.7
	3	1254.1					0.0	1254.1
	8	1068.0	0.1112	0.067	1.660	140.4	609.6	1208.4
	9	1053.6	0.1112	0.067	1.660	140.4	1219.2	1194.0
	10	1052.0	0.1112	0.067	1.660	140.4	1828.8	1192.4
	11	1046.3	0.1112	0.067	1.660	140.4	2438.4	1186.7
	12	1043.5	0.1112	0.067	1.660	140.4	3048.0	1183.9
	13	1042.7	0.1112	0.067	1.660	140.4	3657.6	1183.1

Reading #	Port #	HGL (mm)	Q (m^3/s)	A (m^2)	V=Q/A (m/s)	$V^2/2g$ (mm)	Cum. Hor. Distance (mm)	EGL $HGL+V^2/2g$ (ft)
6	1	1075.7					0.0	1075.7
	2	1077.0					0.0	1077.0
	3	1076.2					0.0	1076.2
	8	1010.0	0.0669	0.067	0.999	50.8	609.6	1060.8
	9	1004.8	0.0669	0.067	0.999	50.8	1219.2	1055.6
	10	1003.9	0.0669	0.067	0.999	50.8	1828.8	1054.7
	11	1003.1	0.0669	0.067	0.999	50.8	2438.4	1053.9
	12	1000.5	0.0669	0.067	0.999	50.8	3048.0	1051.3
	13	1001.5	0.0669	0.067	0.999	50.8	3657.6	1052.3

Reading #	Port #	HGL (mm)	Q (m^3/s)	A (m^2)	V=Q/A (m/s)	$V^2/2g$ (mm)	Cum. Hor. Distance (mm)	EGL $HGL+V^2/2g$ (ft)
7	1	1106.3					0.0	1106.3
	2	1107.0					0.0	1107.0
	3	1107.2					0.0	1107.2
	8	1021.2	0.0760	0.067	1.134	65.6	609.6	1086.8
	9	1012.6	0.0760	0.067	1.134	65.6	1219.2	1078.2
	10	1012.3	0.0760	0.067	1.134	65.6	1828.8	1077.9
	11	1013.0	0.0760	0.067	1.134	65.6	2438.4	1078.6
	12	1011.1	0.0760	0.067	1.134	65.6	3048.0	1076.7
	13	1008.9	0.0760	0.067	1.134	65.6	3657.6	1074.5

		Reading #	Q (cms)	Headbox EGL	Projected EGL	He (mm)	Ke = $2g/V^2$+He	Average He	Average Ke
Date:	12/19/1997								
Run#:	Bm 6								
Data Collected By:	DAB	1*	0.022	939.7	939.3	0.40	0.07		
Inlet Description:	# 12	2*	0.031	958.4	955.1	3.28	0.30	28.53	0.36
		3*	0.039	976.8	971.8	5.04	0.30		
Barrel Slope:	0.05	4	0.047	1000.5	991.6	8.94	0.35		
Inlet Diameter:	11.5 inches	5	0.055	1022.9	1010.9	12.04	0.35		
Barrel Length:	12.9 feet	6	0.062	1045.2	1029.9	15.33	0.35		
Barrel Area:	0.067	7	0.070	1072.6	1052.0	20.53	0.37		
Culvert Barrel Dia:	11.5 in. = 292.1 mm	8	0.078	1099.2	1073.9	25.29	0.37		
Reducer # :	Na	9	0.084	1123.8	1095.7	28.07	0.35		
Reducer length :	Na	10	0.092	1155.2	1120.1	35.09	0.37		
		11	0.097	1177.2	1139.3	37.96	0.36		
		12	0.105	1211.9	1165.1	46.77	0.38		
		13	0.113	1250.5	1195.2	55.27	0.38		

Note = Readings with a " * " were not included in the average

Reading #	Port #	HGL (mm)	Q (m^3/s)	A (m^2)	V=Q/A (m/s)	$V^2/2g$ (mm)	Cum. Hor. Distance (mm)	EGL HGL+$V^2/2g$ (ft)
1	1	939.5					0.0	939.5
	2	939.8					0.0	939.8
	3	939.8					0.0	939.8
	8	932.4	0.0221	0.067	0.330	5.5	609.6	937.9
	9	931.9	0.0221	0.067	0.330	5.5	1219.2	937.4
	10	931.9	0.0221	0.067	0.330	5.5	1828.8	937.4
	11	928.4	0.0221	0.067	0.330	5.5	2438.4	933.9
	12	928.5	0.0221	0.067	0.330	5.5	3048.0	934.0
	13	928.0	0.0221	0.067	0.330	5.5	3657.6	933.5

Reading #	Port #	HGL (mm)	Q (m^3/s)	A (m^2)	V=Q/A (m/s)	$V^2/2g$ (mm)	Cum. Hor. Distance (mm)	EGL HGL+$V^2/2g$ (ft)
2	1	958.6					0.0	958.6
	2	958.3					0.0	958.3
	3	958.2					0.0	958.2
	8	944.1	0.0312	0.067	0.466	11.1	609.6	955.2
	9	943.1	0.0312	0.067	0.466	11.1	1219.2	954.2
	10	942.6	0.0312	0.067	0.466	11.1	1828.8	953.7
	11	942.3	0.0312	0.067	0.466	11.1	2438.4	953.4
	12	942.7	0.0312	0.067	0.466	11.1	3048.0	953.8
	13	941.9	0.0312	0.067	0.466	11.1	3657.6	953.0

Reading #	Port #	HGL (mm)	Q (m^3/s)	A (m^2)	V=Q/A (m/s)	$V^2/2g$ (mm)	Cum. Hor. Distance (mm)	EGL HGL+$V^2/2g$ (ft)
3	1	976.5					0.0	976.5
	2	977.1					0.0	977.1
	3	976.8					0.0	976.8
	8	955.2	0.0385	0.067	0.575	16.8	609.6	972.0
	9	953.2	0.0385	0.067	0.575	16.8	1219.2	970.0
	10	953.0	0.0385	0.067	0.575	16.8	1828.8	969.8
	11	951.8	0.0385	0.067	0.575	16.8	2438.4	968.6
	12	952.4	0.0385	0.067	0.575	16.8	3048.0	969.2
	13	951.9	0.0385	0.067	0.575	16.8	3657.6	968.7

Reading #	Port #	HGL (mm)	Q (m^3/s)	A (m^2)	V=Q/A (m/s)	$V^2/2g$ (mm)	Cum. Hor. Distance (mm)	EGL HGL+$V^2/2g$ (ft)
4	1	999.7					0.0	999.7
	2	1000.9					0.0	1000.9
	3	1001.0					0.0	1001.0
	8	966.5	0.0474	0.067	0.707	25.5	609.6	992.0
	9	963.9	0.0474	0.067	0.707	25.5	1219.2	989.4
	10	964.2	0.0474	0.067	0.707	25.5	1828.8	989.7
	11	962.3	0.0474	0.067	0.707	25.5	2438.4	987.8
	12	963.1	0.0474	0.067	0.707	25.5	3048.0	988.6
	13	962.8	0.0474	0.067	0.707	25.5	3657.6	988.3

Reading #	Port #	HGL (mm)	Q (m^3/s)	A (m^2)	V=Q/A (m/s)	$V^2/2g$ (mm)	Cum. Hor. Distance (mm)	EGL HGL+$V^2/2g$ (ft)
5	1	1022.4					0.0	1022.4
	2	1022.9					0.0	1022.9
	3	1023.4					0.0	1023.4
	8	976.6	0.0551	0.067	0.822	34.5	609.6	1011.1
	9	973.3	0.0551	0.067	0.822	34.5	1219.2	1007.8
	10	973.6	0.0551	0.067	0.822	34.5	1828.8	1008.1
	11	971.4	0.0551	0.067	0.822	34.5	2438.4	1005.9
	12	971.5	0.0551	0.067	0.822	34.5	3048.0	1006.0
	13	971.2	0.0551	0.067	0.822	34.5	3657.6	1005.7

Reading #	Port #	HGL (mm)	Q (m^3/s)	A (m^2)	V=Q/A (m/s)	$V^2/2g$ (mm)	Cum. Hor. Distance (mm)	EGL HGL+$V^2/2g$ (ft)
6	1	1045.2					0.0	1045.2
	2	1045.4					0.0	1045.4
	3	1045.1					0.0	1045.1
	8	986.6	0.0624	0.067	0.931	44.2	609.6	1030.8
	9	981.7	0.0624	0.067	0.931	44.2	1219.2	1025.9
	10	981.9	0.0624	0.067	0.931	44.2	1828.8	1026.1
	11	979.2	0.0624	0.067	0.931	44.2	2438.4	1023.4
	12	980.4	0.0624	0.067	0.931	44.2	3048.0	1024.6
	13	979.7	0.0624	0.067	0.931	44.2	3657.6	1023.9

Reading #	Port #	HGL (mm)	Q (m^3/s)	A (m^2)	V=Q/A (m/s)	$V^2/2g$ (mm)	Cum. Hor. Distance (mm)	EGL HGL+$V^2/2g$ (ft)
8	1	1098.2					0.0	1098.2
	2	1099.0					0.0	1099.0
	3	1100.4					0.0	1100.4
	8	1005.8	0.0778	0.067	1.161	68.7	609.6	1074.5
	9	999.6	0.0778	0.067	1.161	68.7	1219.2	1068.3
	10	999.1	0.0778	0.067	1.161	68.7	1828.8	1067.8
	11	994.0	0.0778	0.067	1.161	68.7	2438.4	1062.7
	12	996.9	0.0778	0.067	1.161	68.7	3048.0	1065.6
	13	994.8	0.0778	0.067	1.161	68.7	3657.6	1063.5

Reading #	Port #	HGL (mm)	Q (m^3/s)	A (m^2)	V=Q/A (m/s)	$V^2/2g$ (mm)	Cum. Hor. Distance (mm)	EGL HGL+$V^2/2g$ (ft)
9	1	1122.7					0.0	1122.7
	2	1124.2					0.0	1124.2
	3	1124.4					0.0	1124.4
	8	1016.7	0.0841	0.067	1.255	80.3	609.6	1097.0
	9	1007.4	0.0841	0.067	1.255	80.3	1219.2	1087.7
	10	1006.4	0.0841	0.067	1.255	80.3	1828.8	1086.7
	11	1000.7	0.0841	0.067	1.255	80.3	2438.4	1081.0
	12	1003.1	0.0841	0.067	1.255	80.3	3048.0	1083.4
	13	1001.6	0.0841	0.067	1.255	80.3	3657.6	1081.9

Reading #	Port #	HGL (mm)	Q (m^3/s)	A (m^2)	V=Q/A (m/s)	$V^2/2g$ (mm)	Cum. Hor. Distance (mm)	EGL HGL+$V^2/2g$ (ft)
10	1	1153.1					0.0	1153.1
	2	1155.4					0.0	1155.4
	3	1157.1					0.0	1157.1
	8	1027.5	0.0915	0.067	1.366	95.1	609.6	1122.6
	9	1016.0	0.0915	0.067	1.366	95.1	1219.2	1111.1
	10	1012.9	0.0915	0.067	1.366	95.1	1828.8	1108.0
	11	1009.2	0.0915	0.067	1.366	95.1	2438.4	1104.3
	12	1011.5	0.0915	0.067	1.366	95.1	3048.0	1106.6
	13	1009.8	0.0915	0.067	1.366	95.1	3657.6	1104.9

Reading #	Port #	HGL (mm)	Q (m^3/s)	A (m^2)	V=Q/A (m/s)	$V^2/2g$ (mm)	Cum. Hor. Distance (mm)	EGL HGL+$V^2/2g$ (ft)
11	1	1175.0					0.0	1175.0
	2	1178.0					0.0	1178.0
	3	1178.7					0.0	1178.7
	8	1034.6	0.0968	0.067	1.445	106.4	609.6	1141.0
	9	1021.3	0.0968	0.067	1.445	106.4	1219.2	1127.7
	10	1019.3	0.0968	0.067	1.445	106.4	1828.8	1125.7
	11	1014.3	0.0968	0.067	1.445	106.4	2438.4	1120.7
	12	1013.9	0.0968	0.067	1.445	106.4	3048.0	1120.3
	13	1013.1	0.0968	0.067	1.445	106.4	3657.6	1119.5

Reading #	Port #	HGL (mm)	Q (m^3/s)	A (m^2)	V=Q/A (m/s)	$V^2/2g$ (mm)	Cum. Hor. Distance (mm)	EGL HGL+$V^2/2g$ (ft)
12	1	1208.8					0.0	1208.8
	2	1212.9					0.0	1212.9
	3	1214.0					0.0	1214.0
	8	1042.5	0.1046	0.067	1.561	124.2	609.6	1166.7
	9	1030.3	0.1046	0.067	1.561	124.2	1219.2	1154.5
	10	1024.9	0.1046	0.067	1.561	124.2	1828.8	1149.1
	11	1017.2	0.1046	0.067	1.561	124.2	2438.4	1141.4
	12	1021.2	0.1046	0.067	1.561	124.2	3048.0	1145.4
	13	1019.6	0.1046	0.067	1.561	124.2	3657.6	1143.8

Reading #	Port #	HGL (mm)	Q (m^3/s)	A (m^2)	V=Q/A (m/s)	$V^2/2g$ (mm)	Cum. Hor. Distance (mm)	EGL HGL+$V^2/2g$ (ft)
13	1	1245.3					0.0	1245.3
	2	1252.5					0.0	1252.5
	3	1253.7					0.0	1253.7
	8	1053.1	0.1127	0.067	1.682	144.2	609.6	1197.3
	9	1038.9	0.1127	0.067	1.682	144.2	1219.2	1183.1
	10	1034.7	0.1127	0.067	1.682	144.2	1828.8	1178.9
	11	1025.8	0.1127	0.067	1.682	144.2	2438.4	1170.0
	12	1030.3	0.1127	0.067	1.682	144.2	3048.0	1174.5
	13	1028.4	0.1127	0.067	1.682	144.2	3657.6	1172.6

Reading #	Port #	HGL (mm)	Q (m^3/s)	A (m^2)	V=Q/A (m/s)	$V^2/2g$ (mm)	Cum. Hor. Distance (mm)	EGL $HGL+V^2/2g$ (ft)
7	1	1071.0					0.0	1071.0
	2	1072.5					0.0	1072.5
	3	1074.2					0.0	1074.2
	8	997.5	0.0702	0.067	1.048	56.0	609.6	1053.5
	9	990.6	0.0702	0.067	1.048	56.0	1219.2	1046.6
	10	991.0	0.0702	0.067	1.048	56.0	1828.8	1047.0
	11	986.6	0.0702	0.067	1.048	56.0	2438.4	1042.6
	12	989.0	0.0702	0.067	1.048	56.0	3048.0	1045.0
	13	988.1	0.0702	0.067	1.048	56.0	3657.6	1044.1

Date:	12/18/1997
Run#:	Bm 5
Data Collected By:	DAB
Inlet Description:	# 12
Barrel Slope:	0.035
Inlet Diameter:	11.5 inches
Barrel Length:	12.9 feet
Barrel Area:	0.067
Culvert Barrel Dia:	11.5 in. = 292.1 mm
Reducer # :	Na
Reducer length :	Na

Reading #	Q (cms)	Headbox EGL	Projected EGL	He (mm)	Ke = $2g/V^2$+He	Average He	Average Ke
1*	0.019	935.2	933.3	1.87	0.45		
2*	0.029	957.5	954.9	2.58	0.27	29.98	0.38
3*	0.037	976.5	972.8	3.72	0.24		
4	0.045	999.1	991.5	7.58	0.33		
5	0.056	1031.5	1018.9	12.62	0.36		
6	0.067	1066.0	1047.2	18.79	0.37		
7	0.076	1100.2	1075.4	24.75	0.37		
8	0.085	1137.6	1105.1	32.47	0.39		
9	0.095	1179.1	1137.9	41.20	0.40		
10	0.104	1214.9	1169.6	45.36	0.37		
11	0.111	1253.6	1196.6	57.07	0.41		

Note = Readings with a " * " were not included in the average

Reading #	Port #	HGL (mm)	Q (m^3/s)	A (m^2)	V=Q/A (m/s)	V^2/2g (mm)	Cum. Hor. Distance (mm)	EGL HGL+V^2/2g (ft)
1	1	936.2					0.0	936.2
	2	934.9					0.0	934.9
	3	934.5					0.0	934.5
	8	929.1	0.0192	0.067	0.287	4.2	609.6	933.3
	9	928.8	0.0192	0.067	0.287	4.2	1219.2	933.0
	10	928.2	0.0192	0.067	0.287	4.2	1828.8	932.4
	11	926.1	0.0192	0.067	0.287	4.2	2438.4	930.3
	12	927.7	0.0192	0.067	0.287	4.2	3048.0	931.9
	13	927.8	0.0192	0.067	0.287	4.2	3657.6	932.0

Reading #	Port #	HGL (mm)	Q (m^3/s)	A (m^2)	V=Q/A (m/s)	V^2/2g (mm)	Cum. Hor. Distance (mm)	EGL HGL+V^2/2g (ft)
2	1	957.3					0.0	957.3
	2	957.3					0.0	957.3
	3	957.9					0.0	957.9
	8	945.1	0.0291	0.067	0.434	9.6	609.6	954.7
	9	944.8	0.0291	0.067	0.434	9.6	1219.2	954.4
	10	944.3	0.0291	0.067	0.434	9.6	1828.8	953.9
	11	943.7	0.0291	0.067	0.434	9.6	2438.4	953.3
	12	943.7	0.0291	0.067	0.434	9.6	3048.0	953.3
	13	943.7	0.0291	0.067	0.434	9.6	3657.6	953.3

Reading #	Port #	HGL (mm)	Q (m^3/s)	A (m^2)	V=Q/A (m/s)	V^2/2g (mm)	Cum. Hor. Distance (mm)	EGL HGL+V^2/2g (ft)
3	1	976.6					0.0	976.6
	2	976.4					0.0	976.4
	3	976.5					0.0	976.5
	8	957.1	0.0370	0.067	0.552	15.5	609.6	972.6
	9	956.1	0.0370	0.067	0.552	15.5	1219.2	971.6
	10	955.7	0.0370	0.067	0.552	15.5	1828.8	971.2
	11	953.6	0.0370	0.067	0.552	15.5	2438.4	969.1
	12	954.3	0.0370	0.067	0.552	15.5	3048.0	969.8
	13	954.6	0.0370	0.067	0.552	15.5	3657.6	970.1

Reading #	Port #	HGL (mm)	Q (m^3/s)	A (m^2)	V=Q/A (m/s)	V^2/2g (mm)	Cum. Hor. Distance (mm)	EGL HGL+V^2/2g (ft)
4	1	998.3					0.0	998.3
	2	999.6					0.0	999.6
	3	999.3					0.0	999.3
	8	968.7	0.0452	0.067	0.675	23.2	609.6	991.9
	9	966.3	0.0452	0.067	0.675	23.2	1219.2	989.5
	10	966.5	0.0452	0.067	0.675	23.2	1828.8	989.7
	11	964.6	0.0452	0.067	0.675	23.2	2438.4	987.8
	12	965.4	0.0452	0.067	0.675	23.2	3048.0	988.6
	13	965.3	0.0452	0.067	0.675	23.2	3657.6	988.5

Reading #	Port #	HGL (mm)	Q (m^3/s)	A (m^2)	V=Q/A (m/s)	V^2/2g (mm)	Cum. Hor. Distance (mm)	EGL HGL+V^2/2g (ft)
5	1	1030.8					0.0	1030.8
	2	1031.6					0.0	1031.6
	3	1032.2					0.0	1032.2
	8	984.0	0.0558	0.067	0.833	35.4	609.6	1019.4
	9	980.5	0.0558	0.067	0.833	35.4	1219.2	1015.9
	10	979.9	0.0558	0.067	0.833	35.4	1828.8	1015.3
	11	977.9	0.0558	0.067	0.833	35.4	2438.4	1013.3
	12	978.8	0.0558	0.067	0.833	35.4	3048.0	1014.2
	13	978.0	0.0558	0.067	0.833	35.4	3657.6	1013.4

Reading #	Port #	HGL (mm)	Q (m^3/s)	A (m^2)	V=Q/A (m/s)	V^2/2g (mm)	Cum. Hor. Distance (mm)	EGL HGL+V^2/2g (ft)
8	1	1134.9					0.0	1134.9
	2	1137.9					0.0	1137.9
	3	1139.9					0.0	1139.9
	8	1023.1	0.0852	0.067	1.272	82.4	609.6	1105.5
	9	1014.9	0.0852	0.067	1.272	82.4	1219.2	1097.3
	10	1016.4	0.0852	0.067	1.272	82.4	1828.8	1098.8
	11	1007.7	0.0852	0.067	1.272	82.4	2438.4	1090.1
	12	1009.2	0.0852	0.067	1.272	82.4	3048.0	1091.6
	13	1010.0	0.0852	0.067	1.272	82.4	3657.6	1092.4

Reading #	Port #	HGL (mm)	Q (m^3/s)	A (m^2)	V=Q/A (m/s)	V^2/2g (mm)	Cum. Hor. Distance (mm)	EGL HGL+V^2/2g (ft)
9	1	1177.5					0.0	1177.5
	2	1180.3					0.0	1180.3
	3	1179.5					0.0	1179.5
	8	1037.6	0.0950	0.067	1.418	102.5	609.6	1140.1
	9	1026.5	0.0950	0.067	1.418	102.5	1219.2	1129.0
	10	1026.4	0.0950	0.067	1.418	102.5	1828.8	1128.9
	11	1021.0	0.0950	0.067	1.418	102.5	2438.4	1123.5
	12	1023.1	0.0950	0.067	1.418	102.5	3048.0	1125.6
	13	1022.1	0.0950	0.067	1.418	102.5	3657.6	1124.6

Reading #	Port #	HGL (mm)	Q (m^3/s)	A (m^2)	V=Q/A (m/s)	V^2/2g (mm)	Cum. Hor. Distance (mm)	EGL HGL+V^2/2g (ft)
10	1	1211.4					0.0	1211.4
	2	1216.8					0.0	1216.8
	3	1216.6					0.0	1216.6
	8	1049.1	0.1039	0.0670	1.5507	122.570	609.6	1171.7
	9	1035.9	0.1039	0.0670	1.5507	122.570	1219.2	1158.5
	10	1034.1	0.1039	0.0670	1.5507	122.570	1828.8	1156.7
	11	1026.7	0.1039	0.0670	1.5507	122.570	2438.4	1149.3
	12	1028.7	0.1039	0.0670	1.5507	122.570	3048.0	1151.3
	13	1028.6	0.1039	0.0670	1.5507	122.570	3657.6	1151.2

Reading #	Port #	HGL (mm)	Q (m^3/s)	A (m^2)	V=Q/A (m/s)	V^2/2g (mm)	Cum. Hor. Distance (mm)	EGL HGL+V^2/2g (ft)
11	1	1249.6					0.0	1249.6
	2	1255					0.0	1255.0
	3	1256.3					0.0	1256.3
	8	1057.8	0.1114	0.0670	1.6627	140.903	609.6	1198.7
	9	1046.4	0.1114	0.0670	1.6627	140.903	1219.2	1187.3
	10	1038.5	0.1114	0.0670	1.6627	140.903	1828.8	1179.4
	11	1033.2	0.1114	0.0670	1.6627	140.903	2438.4	1174.1
	12	1038.3	0.1114	0.0670	1.6627	140.903	3048.0	1179.2
	13	1035.7	0.1114	0.0670	1.6627	140.903	3657.6	1176.6

Reading #	Port #	HGL (mm)	Q (m^3/s)	A (m^2)	V=Q/A (m/s)	$V^2/2g$ (mm)	Cum. Hor. Distance (mm)	EGL $HGL+V^2/2g$ (ft)
6	1	1065.2					0.0	1065.2
	2	1066.2					0.0	1066.2
	3	1066.7					0.0	1066.7
	8	998.0	0.0665	0.067	0.993	50.2	609.6	1048.2
	9	992.4	0.0665	0.067	0.993	50.2	1219.2	1042.6
	10	993.8	0.0665	0.067	0.993	50.2	1828.8	1044.0
	11	990.0	0.0665	0.067	0.993	50.2	2438.4	1040.2
	12	992.0	0.0665	0.067	0.993	50.2	3048.0	1042.2
	13	990.5	0.0665	0.067	0.993	50.2	3657.6	1040.7

Reading #	Port #	HGL (mm)	Q (m^3/s)	A (m^2)	V=Q/A (m/s)	$V^2/2g$ (mm)	Cum. Hor. Distance (mm)	EGL $HGL+V^2/2g$ (ft)
7	1	1099.5					0.0	1099.5
	2	1101.4					0.0	1101.4
	3	1099.6					0.0	1099.6
	8	1009.9	0.0764	0.067	1.140	66.3	609.6	1076.2
	9	1004.5	0.0764	0.067	1.140	66.3	1219.2	1070.8
	10	1003.6	0.0764	0.067	1.140	66.3	1828.8	1069.9
	11	999.6	0.0764	0.067	1.140	66.3	2438.4	1065.9
	12	1002.9	0.0764	0.067	1.140	66.3	3048.0	1069.2
	13	1000.3	0.0764	0.067	1.140	66.3	3657.6	1066.6

Date:	7/21/1997	**Reading #**	**Q**	**Headbox**	**Projected**	**He**	**Ke =**	**Average**	**Average**
Run#:	35		**(cms)**	**EGL**	**EGL**	**(mm)**	**$2g/V^2$+He**	**He**	**Ke**
Data Collected By:	ERU/JKL	1*	0.020	1036.6	1034.9	1.77	0.18		
Inlet Description:	# 12	2*	0.033	1061.2	1067.6	-6.32	-0.24	6.12	0.10
		3	0.038	1094.2	1090.7	3.52	0.10		
Barrel Slope:	0.50%	4	0.046	1125.4	1121.8	3.60	0.07		
Inlet Diameter:	11.5 inches	5	0.055	1166.5	1158.6	7.96	0.11		
Barrel Length:	12 feet	6	0.062	1197.9	1188.5	9.42	0.10		
Barrel Area:	0.04573								
Culvert Barrel Dia:	241.3 mm = 9.5"	Note = Readings with a " * " were not included in the average							
Reducer # :	5								
Reducer length :	14.8125 inches								

Reading #	Port #	HGL (mm)	Q (m^3/s)	A (m^2)	V=Q/A (m/s)	V^2/2g (mm)	Cum. Hor. Distance (mm)	Cum. Hor. Dist. w/out elbow + red (mm)	EGL HGL+V^2/2g (ft)
1	1	1036.5					0.0		1036.5
	2	1036.9					0.0		1036.9
	3	1036.5					0.0		1036.5
	3.5	1029.6	0.0202	0.067	0.301	4.6	63.4		1034.2
	4	1029.8	0.0202	0.067	0.301	4.6	149.4		1034.4
	5	1031.1	0.0202	0.067	0.301	4.6	292.6		1035.7
	6	1031.6	0.0202	0.067	0.301	4.6	433.4		1036.2
	7	1029.3	0.0202	0.061	0.332	5.6	623.9		1034.9
	8	1026.6	0.0202	0.051	0.394	7.9	782.7		1034.5
	9	1024.4	0.0202	0.046	0.442	10.0	1492.3	609.6	1034.4
	10	1023.8	0.0202	0.046	0.442	10.0	2101.9	1219.2	1033.8
	11	1023.3	0.0202	0.046	0.442	10.0	2635.3	1752.6	1033.3
	12	1022.4	0.0202	0.046	0.442	10.0	3321.1	2438.4	1032.4
	13	1022.3	0.0202	0.046	0.442	10.0	3930.7	3048.0	1032.3

Reading #	Port #	HGL (mm)	Q (m^3/s)	A (m^2)	V=Q/A (m/s)	V^2/2g (mm)	Cum. Hor. Distance (mm)	Cum. Hor. Dist. w/out elbow + red (mm)	EGL HGL+V^2/2g (ft)
4	1	1124.7					0.0		1124.7
	2	1126.2					0.0		1126.2
	3	1125.4					0.0		1125.4
	3.5	1090.6	0.0459	0.067	0.685	23.9	63.4		1114.5
	4	1090.0	0.0459	0.067	0.685	23.9	149.4		1113.9
	5	1100.9	0.0459	0.067	0.685	23.9	292.6		1124.8
	6	1101.4	0.0459	0.067	0.685	23.9	433.4		1125.3
	7	1087.5	0.0459	0.061	0.755	29.0	623.9		1116.5
	8	1075.2	0.0459	0.051	0.895	40.8	782.7		1116.0
	9	1068.7	0.0459	0.046	1.004	51.4	1492.3	609.6	1120.1
	10	1065.0	0.0459	0.046	1.004	51.4	2101.9	1219.2	1116.4
	11	1063.2	0.0459	0.046	1.004	51.4	2635.3	1752.6	1114.6
	12	1060.1	0.0459	0.046	1.004	51.4	3321.1	2438.4	1111.5
	13	1059.0	0.0459	0.046	1.004	51.4	3930.7	3048.0	1110.4

Reading #	Port #	HGL (mm)	Q (m^3/s)	A (m^2)	V=Q/A (m/s)	V^2/2g (mm)	Cum. Hor. Distance (mm)	Cum. Hor. Dist. w/out elbow + red (mm)	EGL HGL+V^2/2g (ft)
2	1	1061.1					0.0		1061.1
	2	1061.1					0.0		1061.1
	3	1061.5					0.0		1061.5
	3.5	1049.0	0.0329	0.067	0.491	12.3	63.4		1061.3
	4	1049.2	0.0329	0.067	0.491	12.3	149.4		1061.5
	5	1052.3	0.0329	0.067	0.491	12.3	292.6		1064.6
	6	1052.7	0.0329	0.067	0.491	12.3	433.4		1065.0
	7	1047.9	0.0329	0.061	0.541	14.9	623.9		1062.8
	8	1042.4	0.0329	0.051	0.641	21.0	782.7		1063.4
	9	1040.4	0.0329	0.046	0.720	26.4	1492.3	609.6	1066.8
	10	1038.9	0.0329	0.046	0.720	26.4	2101.9	1219.2	1065.3
	11	1038.3	0.0329	0.046	0.720	26.4	2635.3	1752.6	1064.7
	12	1037.1	0.0329	0.046	0.720	26.4	3321.1	2438.4	1063.5
	13	1036.4	0.0329	0.046	0.720	26.4	3930.7	3048.0	1062.8

Reading #	Port #	HGL (mm)	Q (m^3/s)	A (m^2)	V=Q/A (m/s)	V^2/2g (mm)	Cum. Hor. Distance (mm)	Cum. Hor. Dist. w/out elbow + red (mm)	EGL HGL+V^2/2g (ft)
5	1	1165.3					0.0		1165.3
	2	1166.8					0.0		1166.8
	3	1167.5					0.0		1167.5
	3.5	1117.4	0.0545	0.067	0.813	33.7	63.4		1151.1
	4	1118.8	0.0545	0.067	0.813	33.7	149.4		1152.5
	5	1130.4	0.0545	0.067	0.813	33.7	292.6		1164.1
	6	1131.3	0.0545	0.067	0.813	33.7	433.4		1165.0
	7	1109.2	0.0545	0.061	0.896	41.0	623.9		1150.2
	8	1091.3	0.0545	0.051	1.062	57.5	782.7		1148.8
	9	1083.1	0.0545	0.046	1.193	72.5	1492.3	609.6	1155.6
	10	1077.1	0.0545	0.046	1.193	72.5	2101.9	1219.2	1149.6
	11	1075.7	0.0545	0.046	1.193	72.5	2635.3	1752.6	1148.2
	12	1070.5	0.0545	0.046	1.193	72.5	3321.1	2438.4	1143.0
	13	1067.4	0.0545	0.046	1.193	72.5	3930.7	3048.0	1139.9

Reading #	Port #	HGL (mm)	Q (m^3/s)	A (m^2)	V=Q/A (m/s)	V^2/2g (mm)	Cum. Hor. Distance (mm)	Cum. Hor. Dist. w/out elbow + red (mm)	EGL HGL+V^2/2g (ft)
3	1	1093.8					0.0		1093.8
	2	1094.1					0.0		1094.1
	3	1094.8					0.0		1094.8
	3.5	1072.4	0.0377	0.067	0.563	16.1	63.4		1088.5
	4	1072.0	0.0377	0.067	0.563	16.1	149.4		1088.1
	5	1078.9	0.0377	0.067	0.563	16.1	292.6		1095.0
	6	1079.4	0.0377	0.067	0.563	16.1	433.4		1095.5
	7	1069.0	0.0377	0.061	0.620	19.6	623.9		1088.6
	8	1059.7	0.0377	0.051	0.735	27.5	782.7		1087.2
	9	1055.2	0.0377	0.046	0.825	34.7	1492.3	609.6	1089.9
	10	1052.7	0.0377	0.046	0.825	34.7	2101.9	1219.2	1087.4
	11	1052.6	0.0377	0.046	0.825	34.7	2635.3	1752.6	1087.3
	12	1052.5	0.0377	0.046	0.825	34.7	3321.1	2438.4	1087.2
	13	1049.3	0.0377	0.046	0.825	34.7	3930.7	3048.0	1084.0

Reading #	Port #	HGL (mm)	Q (m^3/s)	A (m^2)	V=Q/A (m/s)	V^2/2g (mm)	Cum. Hor. Distance (mm)	Cum. Hor. Dist. w/out elbow + red (mm)	EGL HGL+V^2/2g (mm)
6	1	1195.3					0.0		1195.3
	2	1199.4					0.0		1199.4
	3	1199.1					0.0		1199.1
	3.5	1131	0.0621	0.067	0.927	43.8	63.4		1174.8
	4	1128.0	0.0621	0.067	0.927	43.8	149.4		1171.8
	5	1149.6	0.0621	0.067	0.927	43.8	292.6		1193.4
	6	1150.4	0.0621	0.067	0.927	43.8	433.4		1194.2
	7	1123.7	0.0621	0.061	1.021	53.2	623.9		1176.9
	8	1101.1	0.0621	0.051	1.211	74.7	782.7		1175.8
	9	1090.0	0.0621	0.046	1.359	94.1	1492.3	609.6	1184.1
	10	1085.6	0.0621	0.046	1.359	94.1	2101.9	1219.2	1179.7
	11	1083.1	0.0621	0.046	1.359	94.1	2635.3	1752.6	1177.2
	12	1075.2	0.0621	0.046	1.359	94.1	3321.1	2438.4	1169.3
	13	1073.6	0.0621	0.046	1.359	94.1	3930.7	3048.0	1167.7

Date:	11/5/1997
Run#:	34
Data Collected By:	CRW
Inlet Description:	# 13
Barrel Slope:	0.02
Inlet Diameter:	11.5 inches
Barrel Length:	12 feet
Barrel Area:	0.0507
Culvert Barrel Dia:	254 mm = 10.0 in.
Reducer # :	11
Reducer length :	11.5 inches

Reading #	Q (cms)	Headbox EGL	Projected EGL	He (mm)	Ke = $2g/V^2$+He	Average He	Average Ke
1*	0.008	919.7	918.9	0.79	0.57		
2*	0.019	944.4	943.4	0.99	0.14	22.31	0.25
3*	0.031	971.2	970.9	0.32	0.02		
4	0.037	998.2	991.4	6.87	0.26	**Average He (no f)**	**Average Ke**
5	0.045	1026.4	1016.6	9.77	0.25		
6	0.055	1067.9	1052.3	15.54	0.26		
7	0.066	1113.2	1091.6	21.55	0.25	20.19	0.23
8	0.075	1159.2	1132.3	26.91	0.24		
9	0.085	1212.9	1180.0	32.95	0.23		
10	0.094	1268.7	1226.1	42.57	0.24		
11*	0.103	1316.8	1272.9	43.87	0.21		

Note = Readings with a " * " were not included in the average

Reading #	Q (cms)	He total (mm)	Hf elbow (mm)	Hf reducer (mm)	He (no f) (mm)	Ke (no f)= $2g/V^2$He
4	0.037	6.87	0.29	0.22	6.36	0.24
5	0.045	9.77	0.48	0.37	8.92	0.23
6	0.055	15.54	0.73	0.57	14.23	0.24
7	0.066	21.55	1.08	0.84	19.63	0.23
8	0.075	26.91	1.54	1.20	24.17	0.22
9	0.085	32.95	2.04	1.58	29.32	0.21
10	0.094	42.57	2.18	1.69	38.70	0.22

Reading #	Port #	HGL (mm)	Q (m^3/s)	A (m^2)	V=Q/A (m/s)	V^2/2g (mm)	Cum. Hor. Distance (mm)	Cum. Hor. Dist. w/out elbow + red (mm)	EGL HGL+V^2/2g (ft)
1	1	919.6					0.0		919.6
	2	919.7					0.0		919.7
	3	919.9					0.0		919.9
	3.5	918.2	0.0084	0.067	0.125	0.8	63.4		919.0
	4	918	0.0084	0.067	0.125	0.8	149.4		918.8
	5	918.8	0.0084	0.067	0.125	0.8	292.6		919.6
	6	919.1	0.0084	0.067	0.125	0.8	433.4		919.9
	7	918.4	0.0084	0.061	0.137	1.0	624.0		919.4
	8	917.7	0.0084	0.056	0.150	1.2	728.7		918.9
	9	917.4	0.0084	0.051	0.166	1.4	1424.0	609.6	918.8
	10	917.3	0.0084	0.051	0.166	1.4	2033.6	1219.2	918.7
	11	917.4	0.0084	0.051	0.166	1.4	2592.4	1778.0	918.8
	12	917.1	0.0084	0.051	0.166	1.4	3252.8	2438.4	918.5
	13	917.0	0.0084	0.051	0.166	1.4	3862.4	3048.0	918.4

Reading #	Port #	HGL (mm)	Q (m^3/s)	A (m^2)	V=Q/A (m/s)	V^2/2g (mm)	Cum. Hor. Distance (mm)	Cum. Hor. Dist. w/out elbow + red (mm)	EGL HGL+V^2/2g (mm)
7	1	1111.3					0.0		1111.3
	2	1114.2					0.0		1114.2
	3	1114.1					0.0		1114.1
	3.5	1034.3	0.0655	0.067	0.978	48.7	63.4		1083.0
	4	1038.2	0.0655	0.067	0.978	48.7	149.4		1086.9
	5	1062.4	0.0655	0.067	0.978	48.7	292.6		1111.1
	6	1064.8	0.0655	0.067	0.978	48.7	433.4		1113.5
	7	1032.4	0.0655	0.061	1.072	58.6	624.0		1091.0
	8	1023.9	0.0655	0.056	1.172	70.0	728.7		1093.9
	9	1004.6	0.0655	0.051	1.292	85.1	1424.0	609.6	1089.7
	10	1000.2	0.0655	0.051	1.292	85.1	2033.6	1219.2	1085.3
	11	1000.3	0.0655	0.051	1.292	85.1	2592.4	1778.0	1085.4
	12	994.9	0.0655	0.051	1.292	85.1	3252.8	2438.4	1080.0
	13	994.4	0.0655	0.051	1.292	85.1	3862.4	3048.0	1079.5

Reading #	Port #	HGL (mm)	Q (m^3/s)	A (m^2)	V=Q/A (m/s)	V^2/2g (mm)	Cum. Hor. Distance (mm)	Cum. Hor. Dist. w/out elbow + red (mm)	EGL HGL+V^2/2g (ft)
2	1	944.6					0.0		944.6
	2	944					0.0		944.0
	3	944.6					0.0		944.6
	3.5	938.7	0.0191	0.067	0.285	4.1	63.4		942.8
	4	938.3	0.0191	0.067	0.285	4.1	149.4		942.4
	5	940.5	0.0191	0.067	0.285	4.1	292.6		944.6
	6	940.6	0.0191	0.067	0.285	4.1	433.4		944.7
	7	939.1	0.0191	0.061	0.313	5.0	624.0		944.1
	8	937.8	0.0191	0.056	0.342	6.0	728.7		943.8
	9	935.8	0.0191	0.051	0.377	7.2	1424.0	609.6	943.0
	10	935.5	0.0191	0.051	0.377	7.2	2033.6	1219.2	942.7
	11	935.8	0.0191	0.051	0.377	7.2	2592.4	1778.0	943.0
	12	935.0	0.0191	0.051	0.377	7.2	3252.8	2438.4	942.2
	13	934.7	0.0191	0.051	0.377	7.2	3862.4	3048.0	941.9

Reading #	Port #	HGL (mm)	Q (m^3/s)	A (m^2)	V=Q/A (m/s)	V^2/2g (mm)	Cum. Hor. Distance (mm)	Cum. Hor. Dist. w/out elbow + red (mm)	EGL HGL+V^2/2g (mm)
8	1	1156.3					0.0		1156.3
	2	1161					0.0		1161.0
	3	1160.3					0.0		1160.3
	3.5	1066.7	0.0747	0.067	1.115	63.4	63.4		1130.1
	4	1066.7	0.0747	0.067	1.115	63.4	149.4		1130.1
	5	1094.9	0.0747	0.067	1.115	63.4	292.6		1158.3
	6	1091.1	0.0747	0.067	1.115	63.4	433.4		1154.5
	7	1058.1	0.0747	0.061	1.223	76.2	624.0		1134.3
	8	1045.9	0.0747	0.056	1.336	91.0	728.7		1136.9
	9	1017.6	0.0747	0.051	1.473	110.6	1424.0	609.6	1128.2
	10	1013.6	0.0747	0.051	1.473	110.6	2033.6	1219.2	1124.2
	11	1013.4	0.0747	0.051	1.473	110.6	2592.4	1778.0	1124.0
	12	1005.5	0.0747	0.051	1.473	110.6	3252.8	2438.4	1116.1
	13	1003.4	0.0747	0.051	1.473	110.6	3862.4	3048.0	1114.0

Reading #	Port #	HGL (mm)	Q (m^3/s)	A (m^2)	V=Q/A (m/s)	V^2/2g (mm)	Cum. Hor. Distance (mm)	Cum. Hor. Dist. w/out elbow + red (mm)	EGL HGL+V^2/2g (ft)
3	1	971.8					0.0		971.8
	2	970.7					0.0		970.7
	3	971.2					0.0		971.2
	3.5	957.2	0.0305	0.067	0.455	10.6	63.4		967.8
	4	956.6	0.0305	0.067	0.455	10.6	149.4		967.2
	5	962.1	0.0305	0.067	0.455	10.6	292.6		972.7
	6	962.3	0.0305	0.067	0.455	10.6	433.4		972.9
	7	957.4	0.0305	0.061	0.499	12.7	624.0		970.1
	8	955.4	0.0305	0.056	0.546	15.2	728.7		970.6
	9	952.0	0.0305	0.051	0.602	18.4	1424.0	609.6	970.4
	10	950.7	0.0305	0.051	0.602	18.4	2033.6	1219.2	969.1
	11	950.8	0.0305	0.051	0.602	18.4	2592.4	1778.0	969.2
	12	950.0	0.0305	0.051	0.602	18.4	3252.8	2438.4	968.4
	13	949.1	0.0305	0.051	0.602	18.4	3862.4	3048.0	967.5

Reading #	Port #	HGL (mm)	Q (m^3/s)	A (m^2)	V=Q/A (m/s)	V^2/2g (mm)	Cum. Hor. Distance (mm)	Cum. Hor. Dist. w/out elbow + red (mm)	EGL HGL+V^2/2g (mm)
9	1	1210.7					0.0		1210.7
	2	1213.4					0.0		1213.4
	3	1214.6					0.0		1214.6
	3.5	1086.2	0.0847	0.067	1.264	81.5	63.4		1167.7
	4	1090	0.0847	0.067	1.264	81.5	149.4		1171.5
	5	1127.9	0.0847	0.067	1.264	81.5	292.6		1209.4
	6	1131.6	0.0847	0.067	1.264	81.5	433.4		1213.1
	7	1083.4	0.0847	0.061	1.386	97.9	624.0		1181.3
	8	1066.2	0.0847	0.056	1.515	117.0	728.7		1183.2
	9	1034.4	0.0847	0.051	1.671	142.2	1424.0	609.6	1176.6
	10	1025.2	0.0847	0.051	1.671	142.2	2033.6	1219.2	1167.4
	11	1024.4	0.0847	0.051	1.671	142.2	2592.4	1778.0	1166.6
	12	1018.4	0.0847	0.051	1.671	142.2	3252.8	2438.4	1160.6
	13	1013.5	0.0847	0.051	1.671	142.2	3862.4	3048.0	1155.7

Reading #	Port #	HGL (mm)	Q (m^3/s)	A (m^2)	V=Q/A (m/s)	V^2/2g (mm)	Cum. Hor. Distance (mm)	Cum. Hor. Dist. w/out elbow + red (mm)	EGL HGL+V^2/2g (ft)
4	1	997.5					0.0		997.5
	2	998.2					0.0		998.2
	3	999					0.0		999.0
	3.5	975.7	0.0365	0.067	0.545	15.1	63.4		990.8
	4	975.7	0.0365	0.067	0.545	15.1	149.4		990.8
	5	983.0	0.0365	0.067	0.545	15.1	292.6		998.1
	6	983.7	0.0365	0.067	0.545	15.1	433.4		998.8
	7	974.7	0.0365	0.061	0.597	18.2	624.0		992.9
	8	970.4	0.0365	0.056	0.653	21.7	728.7		992.1
	9	964.6	0.0365	0.051	0.720	26.4	1424.0	609.6	991.0
	10	963.0	0.0365	0.051	0.720	26.4	2033.6	1219.2	989.4
	11	963.1	0.0365	0.051	0.720	26.4	2592.4	1778.0	989.5
	12	962.4	0.0365	0.051	0.720	26.4	3252.8	2438.4	988.8
	13	961.5	0.0365	0.051	0.720	26.4	3862.4	3048.0	987.9

Reading #	Port #	HGL (mm)	Q (m^3/s)	A (m^2)	V=Q/A (m/s)	V^2/2g (mm)	Cum. Hor. Distance (mm)	Cum. Hor. Dist. w/out elbow + red (mm)	EGL HGL+V^2/2g (mm)
10	1	1267.2					0.0		1267.2
	2	1269.1					0.0		1269.1
	3	1269.8					0.0		1269.8
	3.5	1118.2	0.0944	0.067	1.409	101.2	63.4		1219.4
	4	1116.1	0.0944	0.067	1.409	101.2	149.4		1217.3
	5	1163.5	0.0944	0.067	1.409	101.2	292.6		1264.7
	6	1169.7	0.0944	0.067	1.409	101.2	433.4		1270.9
	7	1110.1	0.0944	0.061	1.545	121.7	624.0		1231.8
	8	1087.1	0.0944	0.056	1.689	145.4	728.7		1232.5
	9	1044.5	0.0944	0.051	1.862	176.7	1424.0	609.6	1221.2
	10	1036.4	0.0944	0.051	1.862	176.7	2033.6	1219.2	1213.1
	11	1038.1	0.0944	0.051	1.862	176.7	2592.4	1778.0	1214.8
	12	1027.6	0.0944	0.051	1.862	176.7	3252.8	2438.4	1204.3
	13	1023.1	0.0944	0.051	1.862	176.7	3862.4	3048.0	1199.8

Reading #	Port #	HGL (mm)	Q (m^3/s)	A (m^2)	V=Q/A (m/s)	$V^2/2g$ (mm)	Cum. Hor. Distance (mm)	Cum. Hor. Dist. w/out elbow + red (mm)	EGL HGL+$V^2/2g$ (ft)
5	1	1026.2					0.0		1026.2
	2	1026.5					0.0		1026.5
	3	1026.5					0.0		1026.5
	3.5	991	0.0447	0.067	0.667	22.7	63.4		1013.7
	4	992.3	0.0447	0.067	0.667	22.7	149.4		1015.0
	5	1002.7	0.0447	0.067	0.667	22.7	292.6		1025.4
	6	1007.6	0.0447	0.067	0.667	22.7	433.4		1030.3
	7	989.6	0.0447	0.061	0.732	27.3	624.0		1016.9
	8	984.2	0.0447	0.056	0.800	32.6	728.7		1016.8
	9	975.4	0.0447	0.051	0.882	39.6	1424.0	609.6	1015.0
	10	974.8	0.0447	0.051	0.882	39.6	2033.6	1219.2	1014.4
	11	974.5	0.0447	0.051	0.882	39.6	2592.4	1778.0	1014.1
	12	972.5	0.0447	0.051	0.882	39.6	3252.8	2438.4	1012.1
	13	970.9	0.0447	0.051	0.882	39.6	3862.4	3048.0	1010.5

Reading #	Port #	HGL (mm)	Q (m^3/s)	A (m^2)	V=Q/A (m/s)	$V^2/2g$ (mm)	Cum. Hor. Distance (mm)	Cum. Hor. Dist. w/out elbow + red (mm)	EGL HGL+$V^2/2g$ (mm)
11	1	1312.9					0.0		1312.9
	2	1317.5					0.0		1317.5
	3	1320					0.0		1320.0
	3.5	1135.5	0.1026	0.067	1.531	119.5	63.4		1255.0
	4	1146.3	0.1026	0.067	1.531	119.5	149.4		1265.8
	5	1199.1	0.1026	0.067	1.531	119.5	292.6		1318.6
	6	1202.8	0.1026	0.067	1.531	119.5	433.4		1322.3
	7	1130.4	0.1026	0.061	1.679	143.7	624.0		1274.1
	8	1107.9	0.1026	0.056	1.835	171.7	728.7		1279.6
	9	1058.3	0.1026	0.051	2.024	208.7	1424.0	609.6	1267.0
	10	1047.2	0.1026	0.051	2.024	208.7	2033.6	1219.2	1255.9
	11	1049.2	0.1026	0.051	2.024	208.7	2592.4	1778.0	1257.9
	12	1036.8	0.1026	0.051	2.024	208.7	3252.8	2438.4	1245.5
	13	1030.5	0.1026	0.051	2.024	208.7	3862.4	3048.0	1239.2

Reading #	Port #	HGL (mm)	Q (m^3/s)	A (m^2)	V=Q/A (m/s)	$V^2/2g$ (mm)	Cum. Hor. Distance (mm)	Cum. Hor. Dist. w/out elbow + red (mm)	EGL HGL+$V^2/2g$ (mm)
6	1	1066.8					0.0		1066.8
	2	1067.4					0.0		1067.4
	3	1069.4					0.0		1069.4
	3.5	1012.8	0.0551	0.067	0.822	34.5	63.4		1047.3
	4	1014	0.0551	0.067	0.822	34.5	149.4		1048.5
	5	1031.9	0.0551	0.067	0.822	34.5	292.6		1066.4
	6	1032.9	0.0551	0.067	0.822	34.5	433.4		1067.4
	7	1011.7	0.0551	0.061	0.902	41.4	624.0		1053.1
	8	1003.6	0.0551	0.056	0.986	49.5	728.7		1053.1
	9	990.1	0.0551	0.051	1.087	60.2	1424.0	609.6	1050.3
	10	987.5	0.0551	0.051	1.087	60.2	2033.6	1219.2	1047.7
	11	989.1	0.0551	0.051	1.087	60.2	2592.4	1778.0	1049.3
	12	985.4	0.0551	0.051	1.087	60.2	3252.8	2438.4	1045.6
	13	982.5	0.0551	0.051	1.087	60.2	3862.4	3048.0	1042.7

		Reading #	Q (cms)	Headbox EGL	Projected EGL	He (mm)	Ke = $2g/V^2$+He	Average He	Average Ke
Date:	11/7/1997								
Run#:	33								
Data Collected By:	CRW	1*	0.009	920.9	921.0	-0.02	-0.01		
Inlet Description:	# 13	2*	0.017	939.2	938.2	0.94	0.17	32.76	0.26
		3*	0.028	969.0	966.8	2.28	0.15		
Barrel Slope:	0.02	4*	0.038	998.2	994.9	3.35	0.12	Average He (no f)	Average Ke
Inlet Diameter:	11.5 inches	5*	0.044	1025.8	1017.1	8.67	0.23		
Barrel Length:	12 feet	6	0.055	1070.4	1055.1	15.35	0.26		
Barrel Area:	0.0507	7	0.065	1115.0	1093.7	21.31	0.26	28.76	0.22
Culvert Barrel Dia:	254 mm = 10.0 in.	8	0.075	1165.8	1137.0	28.81	0.26		
Reducer # :	10	9	0.084	1220.0	1182.4	37.67	0.27		
Reducer length :	23.0 inches	10	0.094	1275.3	1233.4	41.90	0.24		
		11	0.102	1333.5	1282.0	51.50	0.25		

Note = Readings with a " * " were not included in the average

Reading #	Q (cms)	He total (mm)	Hf elbow (mm)	Hf reducer (mm)	He (no f) (mm)	Ke (no f)= $2g/V^2$He
6	0.055	15.35	0.78	1.21	13.37	0.23
7	0.065	21.31	1.06	1.64	18.61	0.23
8	0.075	28.81	1.34	2.08	25.39	0.23
9	0.084	37.67	1.63	2.53	33.51	0.24
10	0.094	41.90	2.06	3.20	36.64	0.21
11	0.102	51.50	2.54	3.94	45.03	0.22

Reading #	Port #	HGL (mm)	Q (m^3/s)	A (m^2)	V=Q/A (m/s)	V^2/2g (mm)	Cum. Hor. Distance (mm)	Cum. Hor. Dist. w/out elbow + red (mm)	EGL HGL+V^2/2g (ft)
1	1	920.9					0.0		920.9
	2	921.1					0.0		921.1
	3	920.8					0.0		920.8
	3.5	919.5	0.0085	0.067	0.127	0.8	63.4		920.3
	4	919.5	0.0085	0.067	0.127	0.8	149.4		920.3
	5	920.0	0.0085	0.067	0.127	0.8	292.6		920.8
	6	920.1	0.0085	0.067	0.127	0.8	433.4		920.9
	7	919.4	0.0085	0.063	0.134	0.9	649.4		920.3
	7.5	919.4	0.0085	0.059	0.145	1.1	814.5		920.5
	8	919	0.0085	0.054	0.157	1.3	979.6		920.3
	9	919.3	0.0085	0.051	0.168	1.4	1716.1	609.6	920.7
	10	918.7	0.0085	0.051	0.168	1.4	2325.7	1219.2	920.1
	11	918.9	0.0085	0.051	0.168	1.4	2884.5	1778.0	920.3
	12	918.1	0.0085	0.051	0.168	1.4	3544.9	2438.4	919.5
	13	918.1	0.0085	0.051	0.168	1.4	4154.5	3048.0	919.5

Reading #	Port #	HGL (mm)	Q (m^3/s)	A (m^2)	V=Q/A (m/s)	V^2/2g (mm)	Cum. Hor. Distance (mm)	Cum. Hor. Dist. w/out elbow + red (mm)	EGL HGL+V^2/2g (mm)
7	1	1113.9					0.0		1113.9
	2	1115.8					0.0		1115.8
	3	1115.2					0.0		1115.2
	3.5	1039.8	0.0645	0.067	0.963	47.2	63.4		1087.0
	4	1042.3	0.0645	0.067	0.963	47.2	149.4		1089.5
	5	1065.8	0.0645	0.067	0.963	47.2	292.6		1113.0
	6	1068.8	0.0645	0.067	0.963	47.2	433.4		1116.0
	7	1041.6	0.0645	0.063	1.019	52.9	649.4		1094.5
	7.5	1035.4	0.0645	0.059	1.101	61.7	814.5		1097.1
	8	1026.2	0.0645	0.054	1.194	72.7	979.6		1098.9
	9	1009.1	0.0645	0.051	1.272	82.5	1716.1	609.6	1091.6
	10	1004.4	0.0645	0.051	1.272	82.5	2325.7	1219.2	1086.9
	11	1005.8	0.0645	0.051	1.272	82.5	2884.5	1778.0	1088.3
	12	1000.4	0.0645	0.051	1.272	82.5	3544.9	2438.4	1082.9
	13	998.6	0.0645	0.051	1.272	82.5	4154.5	3048.0	1081.1

Reading #	Port #	HGL (mm)	Q (m^3/s)	A (m^2)	V=Q/A (m/s)	V^2/2g (mm)	Cum. Hor. Distance (mm)	Cum. Hor. Dist. w/out elbow + red (mm)	EGL HGL+V^2/2g (ft)
2	1	938.8					0.0		938.8
	2	939.4					0.0		939.4
	3	939.3					0.0		939.3
	3.5	935.0	0.0170	0.067	0.254	3.3	63.4		938.3
	4	935	0.0168	0.067	0.251	3.2	149.4		938.2
	5	936.1	0.0168	0.067	0.251	3.2	292.6		939.3
	6	936.4	0.0168	0.067	0.251	3.2	433.4		939.6
	7	935.2	0.0168	0.063	0.265	3.6	649.4		938.8
	7.5	934.9	0.0168	0.059	0.287	4.2	814.5		939.1
	8	934.1	0.0168	0.054	0.311	4.9	979.6		939.0
	9	932.4	0.0168	0.051	0.331	5.6	1716.1	609.6	938.0
	10	932.1	0.0168	0.051	0.331	5.6	2325.7	1219.2	937.7
	11	932.1	0.0168	0.051	0.331	5.6	2884.5	1778.0	937.7
	12	931.6	0.0168	0.051	0.331	5.6	3544.9	2438.4	937.2
	13	931.5	0.0168	0.051	0.331	5.6	4154.5	3048.0	937.1

Reading #	Port #	HGL (mm)	Q (m^3/s)	A (m^2)	V=Q/A (m/s)	V^2/2g (mm)	Cum. Hor. Distance (mm)	Cum. Hor. Dist. w/out elbow + red (mm)	EGL HGL+V^2/2g (mm)
8	1	1163.3					0.0		1163.3
	2	1166.4					0.0		1166.4
	3	1167.7					0.0		1167.7
	3.5	1073.2	0.0746	0.067	1.113	63.2	63.4		1136.4
	4	1074.4	0.0746	0.067	1.113	63.2	149.4		1137.6
	5	1101.2	0.0746	0.067	1.113	63.2	292.6		1164.4
	6	1103.3	0.0746	0.067	1.113	63.2	433.4		1166.5
	7	1070.4	0.0746	0.063	1.179	70.8	649.4		1141.2
	7.5	1060.2	0.0746	0.059	1.273	82.6	814.5		1142.8
	8	1047.9	0.0746	0.054	1.381	97.3	979.6		1145.2
	9	1024.5	0.0746	0.051	1.471	110.3	1716.1	609.6	1134.8
	10	1017.0	0.0746	0.051	1.471	110.3	2325.7	1219.2	1127.3
	11	1020.1	0.0746	0.051	1.471	110.3	2884.5	1778.0	1130.4
	12	1013.7	0.0746	0.051	1.471	110.3	3544.9	2438.4	1124.0
	13	1010.3	0.0746	0.051	1.471	110.3	4154.5	3048.0	1120.6

Reading #	Port #	HGL (mm)	Q (m^3/s)	A (m^2)	V=Q/A (m/s)	V^2/2g (mm)	Cum. Hor. Distance (mm)	Cum. Hor. Dist. w/out elbow + red (mm)	EGL HGL+V^2/2g (ft)
3	1	968.6					0.0		968.6
	2	969.3					0.0		969.3
	3	969.2					0.0		969.2
	3.5	957.3	0.0275	0.067	0.410	8.6	63.4		965.9
	4	956.8	0.0275	0.067	0.410	8.6	149.4		965.4
	5	960.8	0.0275	0.067	0.410	8.6	292.6		969.4
	6	961.9	0.0275	0.067	0.410	8.6	433.4		970.5
	7	957.0	0.0275	0.063	0.434	9.6	649.4		966.6
	7.5	956.7	0.0275	0.059	0.469	11.2	814.5		967.9
	8	954.5	0.0275	0.054	0.509	13.2	979.6		967.7
	9	950.9	0.0275	0.051	0.542	15.0	1716.1	609.6	965.9
	10	951.0	0.0275	0.051	0.542	15.0	2325.7	1219.2	966.0
	11	950.2	0.0275	0.051	0.542	15.0	2884.5	1778.0	965.2
	12	949.3	0.0275	0.051	0.542	15.0	3544.9	2438.4	964.3
	13	948.9	0.0275	0.051	0.542	15.0	4154.5	3048.0	963.9

Reading #	Port #	HGL (mm)	Q (m^3/s)	A (m^2)	V=Q/A (m/s)	V^2/2g (mm)	Cum. Hor. Distance (mm)	Cum. Hor. Dist. w/out elbow + red (mm)	EGL HGL+V^2/2g (mm)
9	1	1217.3					0.0		1217.3
	2	1221.4					0.0		1221.4
	3	1221.4					0.0		1221.4
	3.5	1103.6	0.0843	0.067	1.258	80.7	63.4		1184.3
	4	1099.9	0.0843	0.067	1.258	80.7	149.4		1180.6
	5	1137.3	0.0843	0.067	1.258	80.7	292.6		1218.0
	6	1141.2	0.0843	0.067	1.258	80.7	433.4		1221.9
	7	1096.7	0.0843	0.063	1.332	90.4	649.4		1187.1
	7.5	1086.3	0.0843	0.059	1.439	105.5	814.5		1191.8
	8	1068	0.0843	0.054	1.561	124.2	979.6		1192.2
	9	1037.4	0.0843	0.051	1.663	140.9	1716.1	609.6	1178.3
	10	1031.9	0.0843	0.051	1.663	140.9	2325.7	1219.2	1172.8
	11	1033.2	0.0843	0.051	1.663	140.9	2884.5	1778.0	1174.1
	12	1025.5	0.0843	0.051	1.663	140.9	3544.9	2438.4	1166.4
	13	1021.3	0.0843	0.051	1.663	140.9	4154.5	3048.0	1162.2

Reading #	Port #	HGL (mm)	Q (m^3/s)	A (m^2)	V=Q/A (m/s)	V^2/2g (mm)	Cum. Hor. Distance (mm)	Cum. Hor. Dist. w/out elbow + red (mm)	EGL HGL+V^2/2g (ft)
4	1	997.3					0.0		997.3
	2	998.1					0.0		998.1
	3	999.2					0.0		999.2
	3.5	975.7	0.0376	0.067	0.561	16.1	63.4		991.8
	4	976.9	0.0376	0.067	0.561	16.1	149.4		993.0
	5	982.8	0.0376	0.067	0.561	16.1	292.6		998.9
	6	984.3	0.0376	0.067	0.561	16.1	433.4		1000.4
	7	975.6	0.0376	0.063	0.594	18.0	649.4		993.6
	7.5	974.3	0.0376	0.059	0.642	21.0	814.5		995.3
	8	970.4	0.0376	0.054	0.696	24.7	979.6		995.1
	9	965.9	0.0376	0.051	0.742	28.0	1716.1	609.6	993.9
	10	964.4	0.0376	0.051	0.742	28.0	2325.7	1219.2	992.4
	11	964.1	0.0376	0.051	0.742	28.0	2884.5	1778.0	992.1
	12	963.1	0.0376	0.051	0.742	28.0	3544.9	2438.4	991.1
	13	961.5	0.0376	0.051	0.742	28.0	4154.5	3048.0	989.5

Reading #	Port #	HGL (mm)	Q (m^3/s)	A (m^2)	V=Q/A (m/s)	V^2/2g (mm)	Cum. Hor. Distance (mm)	Cum. Hor. Dist. w/out elbow + red (mm)	EGL HGL+V^2/2g (mm)
10	1	1270.2					0.0		1270.2
	2	1278.4					0.0		1278.4
	3	1277.4					0.0		1277.4
	3.5	1129.5	0.0938	0.067	1.400	99.9	63.4		1229.4
	4	1131.3	0.0938	0.067	1.400	99.9	149.4		1231.2
	5	1174.9	0.0938	0.067	1.400	99.9	292.6		1274.8
	6	1179.7	0.0938	0.067	1.400	99.9	433.4		1279.6
	7	1128.6	0.0938	0.063	1.482	111.9	649.4		1240.5
	7.5	1106.5	0.0938	0.059	1.601	130.6	814.5		1237.1
	8	1089.7	0.0938	0.054	1.737	153.8	979.6		1243.5
	9	1053.5	0.0938	0.051	1.850	174.5	1716.1	609.6	1228.0
	10	1046.8	0.0938	0.051	1.850	174.5	2325.7	1219.2	1221.3
	11	1049.2	0.0938	0.051	1.850	174.5	2884.5	1778.0	1223.7
	12	1039.0	0.0938	0.051	1.850	174.5	3544.9	2438.4	1213.5
	13	1033.0	0.0938	0.051	1.850	174.5	4154.5	3048.0	1207.5

Reading #	Port #	HGL (mm)	Q (m^3/s)	A (m^2)	V=Q/A (m/s)	$V^2/2g$ (mm)	Cum. Hor. Distance (mm)	Cum. Hor. Dist. w/out elbow + red (mm)	EGL $HGL+V^2/2g$ (ft)
5	1	1025.5					0.0		1025.5
	2	1025.2					0.0		1025.2
	3	1026.7					0.0		1026.7
	3.5	992.1	0.0439	0.067	0.655	21.9	63.4		1014.0
	4	993.2	0.0439	0.067	0.655	21.9	149.4		1015.1
	5	1003.9	0.0439	0.067	0.655	21.9	292.6		1025.8
	6	1005.2	0.0439	0.067	0.655	21.9	433.4		1027.1
	7	991.4	0.0439	0.063	0.694	24.5	649.4		1015.9
	7.5	989.3	0.0439	0.059	0.749	28.6	814.5		1017.9
	8	984.8	0.0439	0.054	0.813	33.7	979.6		1018.5
	9	977.7	0.0439	0.051	0.866	38.2	1716.1	609.6	1015.9
	10	976.1	0.0439	0.051	0.866	38.2	2325.7	1219.2	1014.3
	11	975.6	0.0439	0.051	0.866	38.2	2884.5	1778.0	1013.8
	12	973.2	0.0439	0.051	0.866	38.2	3544.9	2438.4	1011.4
	13	972.7	0.0439	0.051	0.866	38.2	4154.5	3048.0	1010.9

Reading #	Port #	HGL (mm)	Q (m^3/s)	A (m^2)	V=Q/A (m/s)	$V^2/2g$ (mm)	Cum. Hor. Distance (mm)	Cum. Hor. Dist. w/out elbow + red (mm)	EGL $HGL+V^2/2g$ (mm)
11	1	1332.3					0.0		1332.3
	2	1334.1					0.0		1334.1
	3	1334.2					0.0		1334.2
	3.5	1154.8	0.1023	0.067	1.527	118.8	63.4		1273.6
	4	1158.2	0.1023	0.067	1.527	118.8	149.4		1277.0
	5	1211.5	0.1023	0.067	1.527	118.8	292.6		1330.3
	6	1216.6	0.1023	0.067	1.527	118.8	433.4		1335.4
	7	1154.2	0.1023	0.063	1.616	133.1	649.4		1287.3
	7.5	1132.5	0.1023	0.059	1.746	155.3	814.5		1287.8
	8	1109.7	0.1023	0.054	1.894	182.9	979.6		1292.6
	9	1068.4	0.1023	0.051	2.018	207.5	1716.1	609.6	1275.9
	10	1059.3	0.1023	0.051	2.018	207.5	2325.7	1219.2	1266.8
	11	1062.0	0.1023	0.051	2.018	207.5	2884.5	1778.0	1269.5
	12	1049.5	0.1023	0.051	2.018	207.5	3544.9	2438.4	1257.0
	13	1043.3	0.1023	0.051	2.018	207.5	4154.5	3048.0	1250.8

Reading #	Port #	HGL (mm)	Q (m^3/s)	A (m^2)	V=Q/A (m/s)	$V^2/2g$ (mm)	Cum. Hor. Distance (mm)	Cum. Hor. Dist. w/out elbow + red (mm)	EGL $HGL+V^2/2g$ (mm)
6	1	1069.7					0.0		1069.7
	2	1070.6					0.0		1070.6
	3	1070.9					0.0		1070.9
	3.5	1017.1	0.0547	0.067	0.816	34.0	63.4		1051.1
	4	1017.9	0.0547	0.067	0.816	34.0	149.4		1051.9
	5	1034.4	0.0547	0.067	0.816	34.0	292.6		1068.4
	6	1037.1	0.0547	0.067	0.816	34.0	433.4		1071.1
	7	1016.4	0.0547	0.063	0.864	38.1	649.4		1054.5
	7.5	1012.2	0.0547	0.059	0.933	44.4	814.5		1056.6
	8	1005.4	0.0547	0.054	1.013	52.3	979.6		1057.7
	9	993.7	0.0547	0.051	1.079	59.3	1716.1	609.6	1053.0
	10	991.2	0.0547	0.051	1.079	59.3	2325.7	1219.2	1050.5
	11	991.7	0.0547	0.051	1.079	59.3	2884.5	1778.0	1051.0
	12	988.6	0.0547	0.051	1.079	59.3	3544.9	2438.4	1047.9
	13	985.8	0.0547	0.051	1.079	59.3	4154.5	3048.0	1045.1

		Reading #	Q	Headbox	Projected	He	Ke =	Average	Average
Date:	9/24/1997			EGL	EGL		$2g/V^2$+He	He	Ke
Run#:	32		(cms)			(mm)			
Data Collected By:	CRW	1*	0.007	935.6	933.6	2.06	1.40		
Inlet Description:	# 12	2*	0.018	963.2	962.0	1.12	0.11	25.35	0.19
		3*	0.027	998.5	995.6	2.90	0.11		
Barrel Slope:	0.02	4*	0.037	1038.2	1032.6	5.54	0.12	Average	Average
Inlet Diameter:	11.5 inches	5	0.043	1075.2	1063.3	11.84	0.19	He (no f)	Ke
Barrel Length:	12 feet	6	0.051	1118.0	1100.8	17.21	0.20		
Barrel Area:	0.0388	7	0.059	1169.1	1146.2	22.95	0.20	21.00	0.15
Culvert Barrel Dia:	222.3 mm = 8.75 inches	8	0.073	1274.4	1242.0	32.32	0.18		
Reducer # :	9	9	0.086	1378.1	1335.6	42.45	0.17		
Reducer length :	21.25 inches								

Note = Readings with a " * " were not included in the average

Reading #	Q	He total	Hf elbow	Hf reducer	He (no f)	Ke (no f)=
	(cms)	(mm)	(mm)	(mm)	(mm)	$2g/V^2$+He
5	0.043	11.84	0.66	1.31	9.86	0.16
6	0.051	17.21	1.02	2.02	14.17	0.16
7	0.059	22.95	1.22	2.41	19.33	0.17
8	0.073	32.32	1.94	3.84	26.55	0.15
9	0.086	42.45	2.47	4.88	35.10	0.14

Reading #	Port #	HGL (mm)	Q (m^3/s)	A (m^2)	V=Q/A (m/s)	V^2/2g (mm)	Cum. Hor. Distance (mm)	Cum. Hor. Dist. w/out elbow + red (mm)	EGL HGL+V^2/2g (ft)
1	1	936.4					0.0		936.4
	2	935.2					0.0		935.2
	3	935.3					0.0		935.3
	3.5	934.6	0.0066	0.067	0.099	0.5	63.4		935.1
	4	934.2	0.0066	0.067	0.099	0.5	149.4		934.7
	5	934.2	0.0066	0.067	0.099	0.5	292.6		934.7
	6	933.9	0.0066	0.067	0.099	0.5	433.4		934.4
	7	933.8	0.0066	0.059	0.111	0.6	655.7		934.4
	7.5	933.1	0.0066	0.052	0.127	0.8	789.0		933.9
	8	933	0.0066	0.045	0.148	1.1	935.1		934.1
	9	931.9	0.0066	0.039	0.170	1.5	1671.4	609.6	933.4
	10	931.6	0.0066	0.039	0.170	1.5	2281.3	1219.2	933.1
	11	931.5	0.0066	0.039	0.170	1.5	2814.7	1778.0	933.0
	12	931.2	0.0066	0.039	0.170	1.5	3500.5	2438.4	932.7
	13	931.0	0.0066	0.039	0.170	1.5	4110.1	3048.0	932.5

Reading #	Port #	HGL (mm)	Q (m^3/s)	A (m^2)	V=Q/A (m/s)	V^2/2g (mm)	Cum. Hor. Distance (mm)	Cum. Hor. Dist. w/out elbow + red (mm)	EGL HGL+V^2/2g (mm)
7	1	1167.9					0.0		1167.9
	2	1169.9					0.0		1169.9
	3	1169.6					0.0		1169.6
	3.5	1111.5	0.0587	0.067	0.876	39.1	63.4		1150.6
	4	1090.1	0.0587	0.067	0.876	39.1	149.4		1129.2
	5	1127.5	0.0587	0.067	0.876	39.1	292.6		1166.6
	6	1128.1	0.0587	0.067	0.876	39.1	433.4		1167.2
	7	1107.6	0.0587	0.059	0.990	49.9	655.7		1157.5
	7.5	1091.6	0.0587	0.052	1.127	64.7	789.0		1156.3
	8	1065.1	0.0587	0.045	1.313	87.9	935.1		1153.0
	9	1024.2	0.0587	0.039	1.513	116.7	1671.4	609.6	1140.9
	10	1017.2	0.0587	0.039	1.513	116.7	2281.3	1219.2	1133.9
	11	1013.3	0.0587	0.039	1.513	116.7	2814.7	1778.0	1130.0
	12	1003.0	0.0587	0.039	1.513	116.7	3500.5	2438.4	1119.7
	13	1001.8	0.0587	0.039	1.513	116.7	4110.1	3048.0	1118.5

Reading #	Port #	HGL (mm)	Q (m^3/s)	A (m^2)	V=Q/A (m/s)	V^2/2g (mm)	Cum. Hor. Distance (mm)	Cum. Hor. Dist. w/out elbow + red (mm)	EGL HGL+V^2/2g (ft)
2	1	963.4					0.0		963.4
	2	963					0.0		963.0
	3	963.1					0.0		963.1
	3.5	958.6	0.0177	0.067	0.264	3.6	63.4		962.2
	4	958.4	0.0177	0.067	0.264	3.6	149.4		962.0
	5	959.9	0.0177	0.067	0.264	3.6	292.6		963.5
	6	960.2	0.0177	0.067	0.264	3.6	433.4		963.8
	7	958.5	0.0177	0.059	0.298	4.5	655.7		963.0
	7.5	956.5	0.0177	0.052	0.340	5.9	789.0		962.4
	8	955	0.0177	0.045	0.396	8.0	935.1		963.0
	9	951.1	0.0177	0.039	0.456	10.6	1671.4	609.6	961.7
	10	950.4	0.0177	0.039	0.456	10.6	2281.3	1219.2	961.0
	11	950.0	0.0177	0.039	0.456	10.6	2814.7	1778.0	960.6
	12	949.5	0.0177	0.039	0.456	10.6	3500.5	2438.4	960.1
	13	949.2	0.0177	0.039	0.456	10.6	4110.1	3048.0	959.8

Reading #	Port #	HGL (mm)	Q (m^3/s)	A (m^2)	V=Q/A (m/s)	V^2/2g (mm)	Cum. Hor. Distance (mm)	Cum. Hor. Dist. w/out elbow + red (mm)	EGL HGL+V^2/2g (mm)
8	1	1271.0					0.0		1271.0
	2	1276.5					0.0		1276.5
	3	1275.6					0.0		1275.6
	3.5	1175.2	0.0731	0.067	1.091	60.7	63.4		1235.9
	4	1146.6	0.0731	0.067	1.091	60.7	149.4		1207.3
	5	1207.9	0.0731	0.067	1.091	60.7	292.6		1268.6
	6	1208.2	0.0731	0.067	1.091	60.7	433.4		1268.9
	7	1176.1	0.0731	0.059	1.233	77.5	655.7		1253.6
	7.5	1153.9	0.0731	0.052	1.403	100.3	789.0		1254.2
	8	1113.9	0.0731	0.045	1.635	136.3	935.1		1250.2
	9	1052.3	0.0731	0.039	1.884	180.9	1671.4	609.6	1233.2
	10	1042.1	0.0731	0.039	1.884	180.9	2281.3	1219.2	1223.0
	11	1034.4	0.0731	0.039	1.884	180.9	2814.7	1778.0	1215.3
	12	1020.2	0.0731	0.039	1.884	180.9	3500.5	2438.4	1201.1
	13	1016.2	0.0731	0.039	1.884	180.9	4110.1	3048.0	1197.1

Reading #	Port #	HGL (mm)	Q (m^3/s)	A (m^2)	V=Q/A (m/s)	V^2/2g (mm)	Cum. Hor. Distance (mm)	Cum. Hor. Dist. w/out elbow + red (mm)	EGL HGL+V^2/2g (ft)
3	1	998.6					0.0		998.6
	2	998.5					0.0		998.5
	3	998.4					0.0		998.4
	3.5	985.8	0.0274	0.067	0.409	8.5	63.4		994.3
	4	985.8	0.0274	0.067	0.409	8.5	149.4		994.3
	5	989.7	0.0274	0.067	0.409	8.5	292.6		998.2
	6	990.5	0.0274	0.067	0.409	8.5	433.4		999.0
	7	986.1	0.0274	0.059	0.462	10.9	655.7		997.0
	7.5	981.9	0.0274	0.052	0.526	14.1	789.0		996.0
	8	976.7	0.0274	0.045	0.613	19.2	935.1		995.9
	9	969.2	0.0274	0.039	0.706	25.4	1671.4	609.6	994.6
	10	966.9	0.0274	0.039	0.706	25.4	2281.3	1219.2	992.3
	11	966.0	0.0274	0.039	0.706	25.4	2814.7	1778.0	991.4
	12	964.0	0.0274	0.039	0.706	25.4	3500.5	2438.4	989.4
	13	963.5	0.0274	0.039	0.706	25.4	4110.1	3048.0	988.9

Reading #	Port #	HGL (mm)	Q (m^3/s)	A (m^2)	V=Q/A (m/s)	V^2/2g (mm)	Cum. Hor.	Cum. Hor. Dist. w/out elbow + red (mm)	EGL HGL+V^2/2g (mm)
9	1	1376.3					0.0		1376.3
	2	1378.7					0.0		1378.7
	3	1379.2					0.0		1379.2
	3.5	1239.1	0.0857	0.067	1.279	83.4	63.4		1322.5
	4	1211.9	0.0857	0.067	1.279	83.4	149.4		1295.3
	5	1286.8	0.0857	0.067	1.279	83.4	292.6		1370.2
	6	1290.5	0.0857	0.067	1.279	83.4	433.4		1373.9
	7	1247.7	0.0857	0.059	1.445	106.5	655.7		1354.2
	7.5	1213.9	0.0857	0.052	1.645	137.9	789.0		1351.8
	8	1160.5	0.0857	0.045	1.917	187.3	935.1		1347.8
	9	1076.4	0.0857	0.039	2.209	248.7	1671.4	609.6	1325.1
	10	1062.1	0.0857	0.039	2.209	248.7	2281.3	1219.2	1310.8
	11	1052.9	0.0857	0.039	2.209	248.7	2814.7	1778.0	1301.6
	12	1034.1	0.0857	0.039	2.209	248.7	3500.5	2438.4	1282.8
	13	1030.5	0.0857	0.039	2.209	248.7	4110.1	3048.0	1279.2

Reading #	Port #	HGL (mm)	Q (m^3/s)	A (m^2)	V=Q/A (m/s)	V^2/2g (mm)	Cum. Hor. Distance (mm)	Cum. Hor. Dist. w/out elbow + red (mm)	EGL HGL+V^2/2g (ft)
4	1	1038.0					0.0		1038.0
	2	1038.5					0.0		1038.5
	3	1038					0.0		1038.0
	3.5	1016.3	0.0370	0.067	0.552	15.5	63.4		1031.8
	4	1015.5	0.0370	0.067	0.552	15.5	149.4		1031.0
	5	1023.4	0.0370	0.067	0.552	15.5	292.6		1038.9
	6	1022.9	0.0370	0.067	0.552	15.5	433.4		1038.4
	7	1015.3	0.0370	0.059	0.624	19.8	655.7		1035.1
	7.5	1010	0.0370	0.052	0.710	25.7	789.0		1035.7
	8	998.8	0.0370	0.045	0.828	34.9	935.1		1033.7
	9	984.4	0.0370	0.039	0.954	46.3	1671.4	609.6	1030.7
	10	981.4	0.0370	0.039	0.954	46.3	2281.3	1219.2	1027.7
	11	980.5	0.0370	0.039	0.954	46.3	2814.7	1778.0	1026.8
	12	976.2	0.0370	0.039	0.954	46.3	3500.5	2438.4	1022.5
	13	976.0	0.0370	0.039	0.954	46.3	4110.1	3048.0	1022.3

Reading #	Port #	HGL (mm)	Q (m^3/s)	A (m^2)	V=Q/A (m/s)	$V^2/2g$ (mm)	Cum. Hor. Distance (mm)	Cum. Hor. Dist. w/out elbow + red (mm)	EGL $HGL+V^2/2g$ (ft)
5	1	1074.6					0.0		1074.6
	2	1075.5					0.0		1075.5
	3	1075.4					0.0		1075.4
	3.5	1041.5	0.0432	0.067	0.645	21.2	63.4		1062.7
	4	1037.3	0.0432	0.067	0.645	21.2	149.4		1058.5
	5	1052.5	0.0432	0.067	0.645	21.2	292.6		1073.7
	6	1054.5	0.0432	0.067	0.645	21.2	433.4		1075.7
	7	1042.2	0.0432	0.059	0.728	27.0	655.7		1069.2
	7.5	1033.3	0.0432	0.052	0.829	35.0	789.0		1068.3
	8	1019.2	0.0432	0.045	0.966	47.6	935.1		1066.8
	9	997.4	0.0432	0.039	1.113	63.2	1671.4	609.6	1060.6
	10	993.2	0.0432	0.039	1.113	63.2	2281.3	1219.2	1056.4
	11	991.3	0.0432	0.039	1.113	63.2	2814.7	1778.0	1054.5
	12	985.6	0.0432	0.039	1.113	63.2	3500.5	2438.4	1048.8
	13	985.1	0.0432	0.039	1.113	63.2	4110.1	3048.0	1048.3

Run #	Port #	HGL (mm)	Q (m^3/s)	A (m^2)	V=Q/A (m/s)	$V^2/2g$ (mm)	Cum. Hor. Distance (mm)	Cum. Hor. Dist. w/out elbow + red (mm)	EGL $HGL+V^2/2g$ (mm)
6	1	1116.9					0.0		1116.9
	2	1118.7					0.0		1118.7
	3	1118.5					0.0		1118.5
	3.5	1069.2	0.0505	0.067	0.754	29.0	63.4		1098.2
	4	1062.6	0.0505	0.067	0.754	29.0	149.4		1091.6
	5	1086.6	0.0505	0.067	0.754	29.0	292.6		1115.6
	6	1087.2	0.0505	0.067	0.754	29.0	433.4		1116.2
	7	1071.5	0.0505	0.059	0.852	37.0	655.7		1108.5
	7.5	1059.6	0.0505	0.052	0.969	47.9	789.0		1107.5
	8	1039.7	0.0505	0.045	1.130	65.1	935.1		1104.8
	9	1009.8	0.0505	0.039	1.302	86.3	1671.4	609.6	1096.1
	10	1004.3	0.0505	0.039	1.302	86.3	2281.3	1219.2	1090.6
	11	1001.3	0.0505	0.039	1.302	86.3	2814.7	1778.0	1087.6
	12	991.6	0.0505	0.039	1.302	86.3	3500.5	2438.4	1077.9
	13	991.4	0.0505	0.039	1.302	86.3	4110.1	3048.0	1077.7

		Reading #	Q (cms)	Headbox EGL	Projected EGL	He (mm)	Ke = $2g/V^2$+He	Average He	Average Ke
Date:	8/28/1997								
Run#:	31								
Data Collected By:	ERU	1*	0.008	941.8	941.3	0.50	0.24		
Inlet Description:	# 12	2*	0.017	968.9	964.7	4.23	0.44	36.37	0.19
		3*	0.034	1020.8	1021.4	-0.59	-0.02		
Barrel Slope:	2.00%	4	0.040	1063.6	1053.1	10.45	0.20	**Average He (no f)**	**Average Ke**
Inlet Diameter:	11.5 inches	5	0.046	1098.1	1085.7	12.43	0.18		
Barrel Length:	12 feet	6	0.056	1164.3	1143.2	21.10	0.20		
Barrel Area:	0.0388	7	0.070	1261.8	1227.7	34.15	0.21	31.52	0.16
Culvert Barrel Dia:	222.3 mm = 8.75"	8	0.081	1347.9	1304.7	43.21	0.20		
Reducer # :	8	9	0.105	1097.4	1035.1	62.28	0.17		
Reducer length :	14.1875 inches	10	0.112	1174.5	1103.5	70.94	0.17		

Note = Readings with a " * " were not included in the average

Reading #	Q (cms)	He total (mm)	Hf elbow (mm)	Hf reducer (mm)	He (no f) (mm)	Ke (no f)= $2g/V^2$+He
4	0.040	10.5	0.5	0.7	9.3	0.2
5	0.046	12.4	0.8	1.1	10.5	0.1
6	0.056	21.1	1.1	1.5	18.4	0.2
7	0.070	34.2	1.6	2.2	30.3	0.2
8	0.081	43.2	2.1	2.7	38.4	0.2
9	0.105	62.3	4.0	5.2	53.1	0.1
10	0.112	70.9	4.5	5.9	60.6	0.1

Reading #	Port #	HGL (mm)	Q (m^3/s)	A (m^2)	V=Q/A (m/s)	V^2/2g (mm)	Cum. Hor. Distance (mm)	Cum. Hor. Dist. w/out elbow + red (mm)	EGL HGL+V^2/2g (ft)
1	1	941.8					0.0		941.8
	2	941.9					0.0		941.9
	3	941.8					0.0		941.8
	3.5	940.6	0.0078	0.067	0.116	0.7	63.4		941.3
	4	941.1	0.0078	0.067	0.116	0.7	149.4		941.8
	5	941.3	0.0078	0.067	0.116	0.7	292.6		942.0
	6	941.3	0.0078	0.067	0.116	0.7	433.4		942.0
	7	940.9	0.0078	0.059	0.132	0.9	623.9		941.8
	8	940.2	0.0078	0.045	0.172	1.5	782.7		941.7
	9	939.3	0.0078	0.039	0.201	2.1	1492.3	609.6	941.4
	10	939.1	0.0078	0.039	0.201	2.1	2101.9	1219.2	941.2
	11	939.0	0.0078	0.039	0.201	2.1	2635.3	1778.0	941.1
	12	939.1	0.0078	0.039	0.201	2.1	3321.1	2438.4	941.2
	13	939.0	0.0078	0.039	0.201	2.1	3930.7	3048.0	941.1

Reading #	Port #	HGL (mm)	Q (m^3/s)	A (m^2)	V=Q/A (m/s)	V^2/2g (mm)	Cum. Hor. Distance (mm)	Cum. Hor. Dist. w/out elbow + red (mm)	EGL HGL+V^2/2g (mm)
7	1	1260.4					0.0		1260.4
	2	1262					0.0		1262.0
	3	1263.1					0.0		1263.1
	3.5	1174.9	0.0696	0.067	1.039	55.0	63.4		1229.9
	4	1146.5	0.0696	0.067	1.039	55.0	149.4		1201.5
	5	1202.1	0.0696	0.067	1.039	55.0	292.6		1257.1
	6	1203.0	0.0696	0.067	1.039	55.0	433.4		1258.0
	7	1165.0	0.0696	0.059	1.174	70.2	623.9		1235.2
	8	1118.0	0.0696	0.045	1.533	119.8	782.7		1237.8
	9	1056.8	0.0696	0.039	1.794	164.0	1492.3	609.6	1220.8
	10	1046.8	0.0696	0.039	1.794	164.0	2101.9	1219.2	1210.8
	11	1040.8	0.0696	0.039	1.794	164.0	2635.3	1778.0	1204.8
	12	1029.6	0.0696	0.039	1.794	164.0	3321.1	2438.4	1193.6
	13	1025.6	0.0696	0.039	1.794	164.0	3930.7	3048.0	1189.6

Reading #	Port #	HGL (mm)	Q (m^3/s)	A (m^2)	V=Q/A (m/s)	V^2/2g (mm)	Cum. Hor. Distance (mm)	Cum. Hor. Dist. w/out elbow + red (mm)	EGL HGL+V^2/2g (ft)
2	1	968.8					0.0		968.8
	2	968.9					0.0		968.9
	3	969.1					0.0		969.1
	3.5	961.8	0.0168	0.067	0.251	3.2	63.4		965.0
	4	963.1	0.0168	0.067	0.251	3.2	149.4		966.3
	5	963.2	0.0168	0.067	0.251	3.2	292.6		966.4
	6	963.5	0.0168	0.067	0.251	3.2	433.4		966.7
	7	961.8	0.0168	0.059	0.283	4.1	623.9		965.9
	8	959.0	0.0168	0.045	0.370	7.0	782.7		966.0
	9	954.9	0.0168	0.039	0.433	9.6	1492.3	609.6	964.5
	10	954.1	0.0168	0.039	0.433	9.6	2101.9	1219.2	963.7
	11	953.8	0.0168	0.039	0.433	9.6	2635.3	1778.0	963.4
	12	953.3	0.0168	0.039	0.433	9.6	3321.1	2438.4	962.9
	13	953.1	0.0168	0.039	0.433	9.6	3930.7	3048.0	962.7

Reading #	Port #	HGL (mm)	Q (m^3/s)	A (m^2)	V=Q/A (m/s)	V^2/2g (mm)	Cum. Hor. Distance (mm)	Cum. Hor. Dist. w/out elbow + red (mm)	EGL HGL+V^2/2g (mm)
8	1	1345.1					0.0		1345.1
	2	1350.1					0.0		1350.1
	3	1348.4					0.0		1348.4
	3.5	1229.9	0.0805	0.067	1.201	73.6	63.4		1303.5
	4	1198.3	0.0805	0.067	1.201	73.6	149.4		1271.9
	5	1269.1	0.0805	0.067	1.201	73.6	292.6		1342.7
	6	1271.1	0.0805	0.067	1.201	73.6	433.4		1344.7
	7	1220.7	0.0805	0.059	1.358	93.9	623.9		1314.6
	8	1158.2	0.0805	0.045	1.773	160.2	782.7		1318.4
	9	1076.1	0.0805	0.039	2.075	219.4	1492.3	609.6	1295.5
	10	1065.8	0.0805	0.039	2.075	219.4	2101.9	1219.2	1285.2
	11	1055.7	0.0805	0.039	2.075	219.4	2635.3	1778.0	1275.1
	12	1041.6	0.0805	0.039	2.075	219.4	3321.1	2438.4	1261.0
	13	1038.3	0.0805	0.039	2.075	219.4	3930.7	3048.0	1257.7

Reading #	Port #	HGL (mm)	Q (m^3/s)	A (m^2)	V=Q/A (m/s)	V^2/2g (mm)	Cum. Hor. Distance (mm)	Cum. Hor. Dist. w/out elbow + red (mm)	EGL HGL+V^2/2g (ft)
3	1	1020.7					0.0		1020.7
	2	1020.9					0.0		1020.9
	3	1020.8					0.0		1020.8
	3.5	1004.3	0.0338	0.067	0.504	13.0	63.4		1017.3
	4	998.6	0.0338	0.067	0.504	13.0	149.4		1011.6
	5	1009.6	0.0338	0.067	0.504	13.0	292.6		1022.6
	6	1009.5	0.0338	0.067	0.504	13.0	433.4		1022.5
	7	1002.7	0.0338	0.059	0.570	16.6	623.9		1019.3
	8	993.1	0.0338	0.045	0.744	28.3	782.7		1021.4
	9	981.5	0.0338	0.039	0.871	38.7	1492.3	609.6	1020.2
	10	979.2	0.0338	0.039	0.871	38.7	2101.9	1219.2	1017.9
	11	978.0	0.0338	0.039	0.871	38.7	2635.3	1778.0	1016.7
	12	975.4	0.0338	0.039	0.871	38.7	3321.1	2438.4	1014.1
	13	975.3	0.0338	0.039	0.871	38.7	3930.7	3048.0	1014.0

Reading #	Port #	HGL (mm)	Q (m^3/s)	A (m^2)	V=Q/A (m/s)	V^2/2g (mm)	Cum. Hor. Distance (mm)	Cum. Hor. Dist. w/out elbow + red (mm)	EGL HGL+V^2/2g (mm)
9	1	1095.5					0.0		1095.5
	2	1098.8					0.0		1098.8
	3	1097.9					0.0		1097.9
	3.5	896.6	0.1050	0.067	1.567	125.2	63.4		1021.8
	4	897.0	0.1050	0.067	1.567	125.2	149.4		1022.2
	5	961.8	0.1050	0.067	1.567	125.2	292.6		1087.0
	6	966.2	0.1050	0.067	1.567	125.2	433.4		1091.4
	7	882.3	0.1050	0.059	1.771	159.8	623.9		1042.1
	8	774.2	0.1050	0.045	2.313	272.6	782.7		1046.8
	9	645.0	0.1050	0.039	2.706	373.3	1492.3	609.6	1018.3
	10	622.6	0.1050	0.039	2.706	373.3	2101.9	1219.2	995.9
	11	605.8	0.1050	0.039	2.706	373.3	2635.3	1778.0	979.1
	12	577.3	0.1050	0.039	2.706	373.3	3321.1	2438.4	950.6
	13	571.4	0.1050	0.039	2.706	373.3	3930.7	3048.0	944.7

Reading #	Port #	HGL (mm)	Q (m^3/s)	A (m^2)	V=Q/A (m/s)	V^2/2g (mm)	Cum. Hor. Distance (mm)	Cum. Hor. Dist. w/out elbow + red (mm)	EGL HGL+V^2/2g (ft)
4	1	1063.2					0.0		1063.2
	2	1063.4					0.0		1063.4
	3	1064.1					0.0		1064.1
	3.5	1034.9	0.0395	0.067	0.590	17.7	63.4		1052.6
	4	1023.5	0.0395	0.067	0.590	17.7	149.4		1041.2
	5	1044.8	0.0395	0.067	0.590	17.7	292.6		1062.5
	6	1045.4	0.0395	0.067	0.590	17.7	433.4		1063.1
	7	1033.3	0.0395	0.059	0.666	22.6	623.9		1055.9
	8	1018.1	0.0395	0.045	0.870	38.6	782.7		1056.7
	9	998.5	0.0395	0.039	1.018	52.8	1492.3	609.6	1051.3
	10	994.8	0.0395	0.039	1.018	52.8	2101.9	1219.2	1047.6
	11	993.2	0.0395	0.039	1.018	52.8	2635.3	1778.0	1046.0
	12	989.1	0.0395	0.039	1.018	52.8	3321.1	2438.4	1041.9
	13	989.0	0.0395	0.039	1.018	52.8	3930.7	3048.0	1041.8

Reading #	Port #	HGL (mm)	Q (m^3/s)	A (m^2)	V=Q/A (m/s)	V^2/2g (mm)	Cum. Hor. Distance (mm)	Cum. Hor. Dist. w/out elbow + red (mm)	EGL HGL+V^2/2g (mm)
10	1	1170.7					0.0		1170.7
	2	1176.1					0.0		1176.1
	3	1176.6					0.0		1176.6
	3.5	950.2	0.1124	0.067	1.678	143.4	63.4		1093.6
	4	942.3	0.1124	0.067	1.678	143.4	149.4		1085.7
	5	1019.8	0.1124	0.067	1.678	143.4	292.6		1163.2
	6	1022.3	0.1124	0.067	1.678	143.4	433.4		1165.7
	7	927.8	0.1124	0.059	1.895	183.1	623.9		1110.9
	8	802.8	0.1124	0.045	2.476	312.4	782.7		1115.2
	9	656.5	0.1124	0.039	2.897	427.7	1492.3	609.6	1084.2
	10	630.7	0.1124	0.039	2.897	427.7	2101.9	1219.2	1058.4
	11	613.4	0.1124	0.039	2.897	427.7	2635.3	1778.0	1041.1
	12	582.2	0.1124	0.039	2.897	427.7	3321.1	2438.4	1009.9
	13	572.2	0.1124	0.039	2.897	427.7	3930.7	3048.0	999.9

Reading #	Port #	HGL (mm)	Q (m^3/s)	A (m^2)	V=Q/A (m/s)	$V^2/2g$ (mm)	Cum. Hor. Distance (mm)	Cum. Hor. Dist. w/out elbow + red (mm)	EGL $HGL+V^2/2g$ (ft)
5	1	1097.7					0.0		1097.7
	2	1098.3					0.0		1098.3
	3	1098.4					0.0		1098.4
	3.5	1059.2	0.0456	0.067	0.681	23.6	63.4		1082.8
	4	1047.8	0.0456	0.067	0.681	23.6	149.4		1071.4
	5	1072.5	0.0456	0.067	0.681	23.6	292.6		1096.1
	6	1074.1	0.0456	0.067	0.681	23.6	433.4		1097.7
	7	1058.1	0.0456	0.059	0.769	30.1	623.9		1088.2
	8	1037.2	0.0456	0.045	1.004	51.4	782.7		1088.6
	9	1011.5	0.0456	0.039	1.175	70.4	1492.3	609.6	1081.9
	10	1007.5	0.0456	0.039	1.175	70.4	2101.9	1219.2	1077.9
	11	1004.1	0.0456	0.039	1.175	70.4	2635.3	1778.0	1074.5
	12	996.9	0.0456	0.039	1.175	70.4	3321.1	2438.4	1067.3
	13	996.8	0.0456	0.039	1.175	70.4	3930.7	3048.0	1067.2

Reading #	Port #	HGL (mm)	Q (m^3/s)	A (m^2)	V=Q/A (m/s)	$V^2/2g$ (mm)	Cum. Hor. Distance (mm)	Cum. Hor. Dist. w/out elbow + red (mm)	EGL $HGL+V^2/2g$ (mm)
6	1	1162.6					0.0		1162.6
	2	1164.6					0.0		1164.6
	3	1165.6					0.0		1165.6
	3.5	1105	0.0563	0.067	0.840	36.0	63.4		1141.0
	4	1087.2	0.0563	0.067	0.840	36.0	149.4		1123.2
	5	1124.3	0.0563	0.067	0.840	36.0	292.6		1160.3
	6	1125.5	0.0563	0.067	0.840	36.0	433.4		1161.5
	7	1101.5	0.0563	0.059	0.949	45.9	623.9		1147.4
	8	1070.9	0.0563	0.045	1.240	78.4	782.7		1149.3
	9	1031.0	0.0563	0.039	1.451	107.3	1492.3	609.6	1138.3
	10	1024.3	0.0563	0.039	1.451	107.3	2101.9	1219.2	1131.6
	11	1020.0	0.0563	0.039	1.451	107.3	2635.3	1778.0	1127.3
	12	1010.9	0.0563	0.039	1.451	107.3	3321.1	2438.4	1118.2
	13	1009.8	0.0563	0.039	1.451	107.3	3930.7	3048.0	1117.1

		Reading #	Q (cms)	Headbox EGL	Projected EGL	He (mm)	Ke = $2g/V^2$+He	Average He	Average Ke
Date:	9/3/1997								
Run#:	30								
Data Collected By:	ERU, CRW	1*	0.005	1040.7	1038.1	2.56	3.15		
Inlet Description:	# 12	2*	0.015	1062.3	1061.8	0.58	0.08	22.74	0.17
		3*	0.026	1097.0	1095.6	1.45	0.06		
Barrel Slope:	2.00%	4*	0.036	1133.6	1134.1	-0.48	-0.01	**Average He (no f)**	**Average Ke**
Inlet Diameter:	11.5 inches	5	0.042	1170.9	1161.7	9.17	0.16		
Barrel Length:	12 feet	6	0.049	1212.2	1197.8	14.47	0.18		
Barrel Area:	0.0388	7	0.057	1266.5	1247.0	19.48	0.17	20.33	0.15
Culvert Barrel Dia:	222.3 mm = 8.75 inches	8	0.071	1364.3	1336.4	27.87	0.16		
Reducer # :	7	9	0.086	1482.7	1440.1	42.68	0.17		
Reducer length :	7.0625 inches								

Note = Readings with a " * " were not included in the average

Reading #	Q (cms)	He total (mm)	Hf elbow (mm)	Hf reducer (mm)	He (no f) (mm)	Ke (no f)= $2g/V^2$+He
5	0.042	9.17	0.60	0.39	8.18	0.14
6	0.049	14.47	0.82	0.54	13.12	0.16
7	0.057	19.48	1.26	0.83	17.39	0.16
8	0.071	27.87	2.01	1.32	24.54	0.14
9	0.086	42.68	2.58	1.69	38.41	0.15

Reading #	Port #	HGL (mm)	Q (m^3/s)	A (m^2)	V=Q/A (m/s)	V^2/2g (mm)	Cum. Hor. Distance (mm)	Cum. Hor. Dist. w/out elbow + red (mm)	EGL HGL+V^2/2g (ft)
1	1	1041.7					0.0		1041.7
	2	1040.5					0.0		1040.5
	3	1039.9					0.0		1039.9
	3.5	1039.7	0.0049	0.067	0.073	0.3	63.4		1040.0
	4	1039.4	0.0049	0.067	0.073	0.3	149.4		1039.7
	5	1039.1	0.0049	0.067	0.073	0.3	292.6		1039.4
	6	1038.6	0.0049	0.067	0.073	0.3	433.4		1038.9
	7	1038.0	0.0049	0.052	0.094	0.5	611.2		1038.5
	9	1037.3	0.0049	0.039	0.126	0.8	1311.3	609.6	1038.1
	10	1036.6	0.0049	0.039	0.126	0.8	1920.9	1219.2	1037.4
	11	1036.3	0.0049	0.039	0.126	0.8	2454.3	1778.0	1037.1
	12	1036.2	0.0049	0.039	0.126	0.8	3140.1	2438.4	1037.0
	13	1036.1	0.0049	0.039	0.126	0.8	3749.7	3048.0	1036.9

Reading #	Port #	HGL (mm)	Q (m^3/s)	A (m^2)	V=Q/A (m/s)	V^2/2g (mm)	Cum. Hor. Distance (mm)	Cum. Hor. Dist. w/out elbow + red (mm)	EGL HGL+V^2/2g (mm)
7	1	1265.8					0.0		1265.8
	2	1266					0.0		1266.0
	3	1267.6					0.0		1267.6
	3.5	1205	0.0574	0.067	0.857	37.4	63.4		1242.4
	4	1209.4	0.0574	0.067	0.857	37.4	149.4		1246.8
	5	1224.6	0.0574	0.067	0.857	37.4	292.6		1262.0
	6	1224.0	0.0574	0.067	0.857	37.4	433.4		1261.4
	7	1186.9	0.0574	0.052	1.102	61.9	611.2		1248.8
	9	1129.2	0.0574	0.039	1.479	111.5	1311.3	609.6	1240.7
	10	1123.5	0.0574	0.039	1.479	111.5	1920.9	1219.2	1235.0
	11	1118.0	0.0574	0.039	1.479	111.5	2454.3	1778.0	1229.5
	12	1109.4	0.0574	0.039	1.479	111.5	3140.1	2438.4	1220.9
	13	1105.6	0.0574	0.039	1.479	111.5	3749.7	3048.0	1217.1

Reading #	Port #	HGL (mm)	Q (m^3/s)	A (m^2)	V=Q/A (m/s)	V^2/2g (mm)	Cum. Hor. Distance (mm)	Cum. Hor. Dist. w/out elbow + red (mm)	EGL HGL+V^2/2g (ft)
2	1	1062.6					0.0		1062.6
	2	1062.2					0.0		1062.2
	3	1062.2					0.0		1062.2
	3.5	1059.3	0.0149	0.067	0.222	2.5	63.4		1061.8
	4	1059.3	0.0149	0.067	0.222	2.5	149.4		1061.8
	5	1059.6	0.0149	0.067	0.222	2.5	292.6		1062.1
	6	1059.7	0.0149	0.067	0.222	2.5	433.4		1062.2
	7	1057.8	0.0149	0.052	0.286	4.2	611.2		1062.0
	9	1053.8	0.0149	0.039	0.384	7.5	1311.3	609.6	1061.3
	10	1053.2	0.0149	0.039	0.384	7.5	1920.9	1219.2	1060.7
	11	1052.8	0.0149	0.039	0.384	7.5	2454.3	1778.0	1060.3
	12	1052.3	0.0149	0.039	0.384	7.5	3140.1	2438.4	1059.8
	13	1051.8	0.0149	0.039	0.384	7.5	3749.7	3048.0	1059.3

Reading #	Port #	HGL (mm)	Q (m^3/s)	A (m^2)	V=Q/A (m/s)	V^2/2g (mm)	Cum. Hor. Distance (mm)	Cum. Hor. Dist. w/out elbow + red (mm)	EGL HGL+V^2/2g (mm)
8	1	1362.1					0.0		1362.1
	2	1365.4					0.0		1365.4
	3	1365.4					0.0		1365.4
	3.5	1276.7	0.0714	0.067	1.066	57.9	63.4		1334.6
	4	1252.3	0.0714	0.067	1.066	57.9	149.4		1310.2
	5	1301.1	0.0714	0.067	1.066	57.9	292.6		1359.0
	6	1297.3	0.0714	0.067	1.066	57.9	433.4		1355.2
	7	1241.9	0.0714	0.052	1.370	95.7	611.2		1337.6
	9	1155.9	0.0714	0.039	1.840	172.6	1311.3	609.6	1328.5
	10	1143.1	0.0714	0.039	1.840	172.6	1920.9	1219.2	1315.7
	11	1135.0	0.0714	0.039	1.840	172.6	2454.3	1778.0	1307.6
	12	1121.5	0.0714	0.039	1.840	172.6	3140.1	2438.4	1294.1
	13	1117.8	0.0714	0.039	1.840	172.6	3749.7	3048.0	1290.4

Reading #	Port #	HGL (mm)	Q (m^3/s)	A (m^2)	V=Q/A (m/s)	V^2/2g (mm)	Cum. Hor. Distance (mm)	Cum. Hor. Dist. w/out elbow + red (mm)	EGL HGL+V^2/2g (ft)
3	1	1097.4					0.0		1097.4
	2	1096.7					0.0		1096.7
	3	1097					0.0		1097.0
	3.5	1086.4	0.0257	0.067	0.384	7.5	63.4		1093.9
	4	1086.1	0.0257	0.067	0.384	7.5	149.4		1093.6
	5	1089.0	0.0257	0.067	0.384	7.5	292.6		1096.5
	6	1089.6	0.0257	0.067	0.384	7.5	433.4		1097.1
	7	1082.7	0.0257	0.052	0.493	12.4	611.2		1095.1
	9	1072.3	0.0257	0.039	0.662	22.4	1311.3	609.6	1094.7
	10	1070.6	0.0257	0.039	0.662	22.4	1920.9	1219.2	1093.0
	11	1069.5	0.0257	0.039	0.662	22.4	2454.3	1778.0	1091.9
	12	1067.9	0.0257	0.039	0.662	22.4	3140.1	2438.4	1090.3
	13	1067.5	0.0257	0.039	0.662	22.4	3749.7	3048.0	1089.9

Reading #	Port #	HGL (mm)	Q (m^3/s)	A (m^2)	V=Q/A (m/s)	V^2/2g (mm)	Cum. Hor. Distance (mm)	Cum. Hor. Dist. w/out elbow + red (mm)	EGL HGL+V^2/2g (mm)
9	1	1481.0					0.0		1481.0
	2	1482.5					0.0		1482.5
	3	1484.7					0.0		1484.7
	3.5	1348.9	0.0862	0.067	1.287	84.4	63.4		1433.3
	4	1317.8	0.0862	0.067	1.287	84.4	149.4		1402.2
	5	1393.6	0.0862	0.067	1.287	84.4	292.6		1478.0
	6	1390.9	0.0862	0.067	1.287	84.4	433.4		1475.3
	7	1302.6	0.0862	0.052	1.655	139.5	611.2		1442.1
	9	1174.2	0.0862	0.039	2.222	251.6	1311.3	609.6	1425.8
	10	1164.6	0.0862	0.039	2.222	251.6	1920.9	1219.2	1416.2
	11	1155.9	0.0862	0.039	2.222	251.6	2454.3	1778.0	1407.5
	12	1134.0	0.0862	0.039	2.222	251.6	3140.1	2438.4	1385.6
	13	1127.1	0.0862	0.039	2.222	251.6	3749.7	3048.0	1378.7

Reading #	Port #	HGL (mm)	Q (m^3/s)	A (m^2)	V=Q/A (m/s)	V^2/2g (mm)	Cum. Hor. Distance (mm)	Cum. Hor. Dist. w/out elbow + red (mm)	EGL HGL+V^2/2g (ft)
4	1	1133.4					0.0		1133.4
	2	1133.8					0.0		1133.8
	3	1133.7					0.0		1133.7
	3.5	1113.8	0.0364	0.067	0.543	15.0	63.4		1128.8
	4	1113.8	0.0364	0.067	0.543	15.0	149.4		1128.8
	5	1120.1	0.0364	0.067	0.543	15.0	292.6		1135.1
	6	1120.1	0.0364	0.067	0.543	15.0	433.4		1135.1
	7	1106.6	0.0364	0.052	0.699	24.9	611.2		1131.5
	9	1087.2	0.0364	0.039	0.938	44.9	1311.3	609.6	1132.1
	10	1084.5	0.0364	0.039	0.938	44.9	1920.9	1219.2	1129.4
	11	1083.9	0.0364	0.039	0.938	44.9	2454.3	1778.0	1128.8
	12	1080.0	0.0364	0.039	0.938	44.9	3140.1	2438.4	1124.9
	13	1078.8	0.0364	0.039	0.938	44.9	3749.7	3048.0	1123.7

Reading #	Port #	HGL (mm)	Q (m^3/s)	A (m^2)	V=Q/A (m/s)	$V^2/2g$ (mm)	Cum. Hor. Distance (mm)	Cum. Hor. Dist. w/out elbow + red (mm)	EGL $HGL+V^2/2g$ (ft)
5	1	1170.6					0.0		1170.6
	2	1171.1					0.0		1171.1
	3	1170.9					0.0		1170.9
	3.5	1138.7	0.0415	0.067	0.619	19.6	63.4		1158.3
	4	1139.8	0.0415	0.067	0.619	19.6	149.4		1159.4
	5	1150.4	0.0415	0.067	0.619	19.6	292.6		1170.0
	6	1150.7	0.0415	0.067	0.619	19.6	433.4		1170.3
	7	1129.8	0.0415	0.052	0.797	32.3	611.2		1162.1
	9	1100.8	0.0415	0.039	1.070	58.3	1311.3	609.6	1159.1
	10	1097.1	0.0415	0.039	1.070	58.3	1920.9	1219.2	1155.4
	11	1095.4	0.0415	0.039	1.070	58.3	2454.3	1778.0	1153.7
	12	1090.9	0.0415	0.039	1.070	58.3	3140.1	2438.4	1149.2
	13	1089.4	0.0415	0.039	1.070	58.3	3749.7	3048.0	1147.7

Reading #	Port #	HGL (mm)	Q (m^3/s)	A (m^2)	V=Q/A (m/s)	$V^2/2g$ (mm)	Cum. Hor. Distance (mm)	Cum. Hor. Dist. w/out elbow + red (mm)	EGL $HGL+V^2/2g$ (mm)
6	1	1212.0					0.0		1212.0
	2	1212.7					0.0		1212.7
	3	1212					0.0		1212.0
	3.5	1167	0.0488	0.067	0.728	27.0	63.4		1194.0
	4	1168.3	0.0488	0.067	0.728	27.0	149.4		1195.3
	5	1180.9	0.0488	0.067	0.728	27.0	292.6		1207.9
	6	1182.4	0.0488	0.067	0.728	27.0	433.4		1209.4
	7	1154.2	0.0488	0.052	0.937	44.7	611.2		1198.9
	9	1113.0	0.0488	0.039	1.258	80.6	1311.3	609.6	1193.6
	10	1109.1	0.0488	0.039	1.258	80.6	1920.9	1219.2	1189.7
	11	1106.9	0.0488	0.039	1.258	80.6	2454.3	1778.0	1187.5
	12	1099.6	0.0488	0.039	1.258	80.6	3140.1	2438.4	1180.2
	13	1098.0	0.0488	0.039	1.258	80.6	3749.7	3048.0	1178.6

		Reading #	Q (cms)	Headbox EGL	Projected EGL	He (mm)	Ke = $2g/V^2$*He	Average He	Average Ke
Date:	8/13/1997								
Run#:	29								
Data Collected By:	ERU	1*	0.010	952.8	948.7	4.07	1.85		
Inlet Description:	# 12	2*	0.021	976.7	975.7	0.94	0.09	17.46	0.15
		3*	0.034	1006.5	1010.7	-4.22	-0.15		
Barrel Slope:	1.50%	4*	0.037	1029.1	1021.4	7.70	0.23	**Average He (no f)**	**Average Ke**
Inlet Diameter:	11.5 inches	5	0.045	1063.0	1056.3	6.74	0.14		
Barrel Length:	12 feet	6	0.053	1100.9	1088.8	12.04	0.17		
Barrel Area:	0.04573	7	0.061	1139.9	1127.2	12.70	0.14	14.69	0.13
Culvert Barrel Dia:	241.3 mm = 9.5"	8	0.068	1179.9	1160.3	19.57	0.17		
Reducer # :	6	9	0.081	1257.2	1233.8	23.36	0.15		
Reducer length :	7.0625 inches	10	0.089	1314.6	1284.2	30.34	0.16		

Note = Readings with a " * " were not included in the average

Reading #	Q (cms)	He total (mm)	Hf elbow (mm)	Hf reducer (mm)	He (no f) (mm)	Ke (no f)= $2g/V^2$*He
5	0.045	6.74	0.81	0.44	5.49	0.11
6	0.053	12.04	1.04	0.56	10.43	0.15
7	0.061	12.70	1.56	0.84	10.30	0.11
8	0.068	19.57	1.71	0.92	16.94	0.15
9	0.081	23.36	2.60	1.41	19.35	0.12
10	0.089	30.34	3.04	1.64	25.65	0.13

Reading #	Port #	HGL (mm)	Q (m^3/s)	A (m^2)	V=Q/A (m/s)	V^2/2g (mm)	Cum. Hor. Distance (mm)	Cum. Hor. Dist. w/out elbow + red (mm)	EGL HGL+V^2/2g (ft)
1	1	953.1					0.0		953.1
	2	952.6					0.0		952.6
	3	952.6					0.0		952.6
	3.5	950.8	0.0095	0.067	0.142	1.0	63.4		951.8
	4	951.6	0.0095	0.067	0.142	1.0	149.4		952.6
	5	950.7	0.0095	0.067	0.142	1.0	292.6		951.7
	6	950.6	0.0095	0.067	0.142	1.0	433.4		951.6
	7	949.6	0.0095	0.054	0.175	1.6	623.9		951.2
	9	946.4	0.0095	0.046	0.208	2.2	1311.3	609.6	948.6
	10	946.3	0.0095	0.046	0.208	2.2	1920.9	1219.2	948.5
	11	946.3	0.0095	0.046	0.208	2.2	2454.3	1752.6	948.5
	12	946.0	0.0095	0.046	0.208	2.2	3140.1	2438.4	948.2
	13	946.1	0.0095	0.046	0.208	2.2	3749.7	3048.0	948.3

Reading #	Port #	HGL (mm)	Q (m^3/s)	A (m^2)	V=Q/A (m/s)	V^2/2g (mm)	Cum. Hor. Distance (mm)	Cum. Hor. Dist. w/out elbow + red (mm)	EGL HGL+V^2/2g (mm)
7	1	1138.9					0.0		1138.9
	2	1140.1					0.0		1140.1
	3	1140.6					0.0		1140.6
	3.5	1072.7	0.0609	0.067	0.909	42.1	63.4		1114.8
	4	1066.1	0.0609	0.067	0.909	42.1	149.4		1108.2
	5	1093.7	0.0609	0.067	0.909	42.1	292.6		1135.8
	6	1093.6	0.0609	0.067	0.909	42.1	433.4		1135.7
	7	1054.9	0.0609	0.054	1.122	64.1	623.9		1119.0
	9	1032.6	0.0609	0.046	1.333	90.5	1311.3	609.6	1123.1
	10	1025.6	0.0609	0.046	1.333	90.5	1920.9	1219.2	1116.1
	11	1023.1	0.0609	0.046	1.333	90.5	2454.3	1752.6	1113.6
	12	1016.6	0.0609	0.046	1.333	90.5	3140.1	2438.4	1107.1
	13	1012.7	0.0609	0.046	1.333	90.5	3749.7	3048.0	1103.2

Reading #	Port #	HGL (mm)	Q (m^3/s)	A (m^2)	V=Q/A (m/s)	V^2/2g (mm)	Cum. Hor. Distance (mm)	Cum. Hor. Dist. w/out elbow + red (mm)	EGL HGL+V^2/2g (ft)
2	1	976.3					0.0		976.3
	2	976.8					0.0		976.8
	3	976.9					0.0		976.9
	3.5	969.5	0.0205	0.067	0.306	4.8	63.4		974.3
	4	970.8	0.0205	0.067	0.306	4.8	149.4		975.6
	5	971.3	0.0205	0.067	0.306	4.8	292.6		976.1
	6	971.9	0.0205	0.067	0.306	4.8	433.4		976.7
	7	967.9	0.0205	0.054	0.378	7.3	623.9		975.2
	9	964.9	0.0205	0.046	0.449	10.3	1311.3	609.6	975.2
	10	964.4	0.0205	0.046	0.449	10.3	1920.9	1219.2	974.7
	11	964.2	0.0205	0.046	0.449	10.3	2454.3	1752.6	974.5
	12	963.2	0.0205	0.046	0.449	10.3	3140.1	2438.4	973.5
	13	962.9	0.0205	0.046	0.449	10.3	3749.7	3048.0	973.2

Reading #	Port #	HGL (mm)	Q (m^3/s)	A (m^2)	V=Q/A (m/s)	V^2/2g (mm)	Cum. Hor. Distance (mm)	Cum. Hor. Dist. w/out elbow + red (mm)	EGL HGL+V^2/2g (mm)
8	1	1178.8					0.0		1178.8
	2	1180.3					0.0		1180.3
	3	1180.6					0.0		1180.6
	3.5	1096.9	0.0681	0.067	1.016	52.7	63.4		1149.6
	4	1104.4	0.0681	0.067	1.016	52.7	149.4		1157.1
	5	1123.1	0.0681	0.067	1.016	52.7	292.6		1175.8
	6	1121.8	0.0681	0.067	1.016	52.7	433.4		1174.5
	7	1074.9	0.0681	0.054	1.254	80.2	623.9		1155.1
	9	1042.9	0.0681	0.046	1.490	113.2	1311.3	609.6	1156.1
	10	1034.5	0.0681	0.046	1.490	113.2	1920.9	1219.2	1147.7
	11	1033.2	0.0681	0.046	1.490	113.2	2454.3	1752.6	1146.4
	12	1023.8	0.0681	0.046	1.490	113.2	3140.1	2438.4	1137.0
	13	1021.5	0.0681	0.046	1.490	113.2	3749.7	3048.0	1134.7

Reading #	Port #	HGL (mm)	Q (m^3/s)	A (m^2)	V=Q/A (m/s)	V^2/2g (mm)	Cum. Hor. Distance (mm)	Cum. Hor. Dist. w/out elbow + red (mm)	EGL HGL+V^2/2g (ft)
3	1	1006.0					0.0		1006.0
	2	1006.5					0.0		1006.5
	3	1007					0.0		1007.0
	3.5	992	0.0336	0.067	0.501	12.8	63.4		1004.8
	5	996.5	0.0336	0.067	0.501	12.8	292.6		1009.3
	6	996.7	0.0336	0.067	0.501	12.8	433.4		1009.5
	7	987.5	0.0336	0.054	0.619	19.5	623.9		1007.0
	9	982.3	0.0336	0.046	0.735	27.6	1311.3	609.6	1009.9
	10	980.6	0.0336	0.046	0.735	27.6	1920.9	1219.2	1008.2
	11	980.2	0.0336	0.046	0.735	27.6	2454.3	1752.6	1007.8
	12	978.7	0.0336	0.046	0.735	27.6	3140.1	2438.4	1006.3
	13	977.8	0.0336	0.046	0.735	27.6	3749.7	3048.0	1005.4

Reading #	Port #	HGL (mm)	Q (m^3/s)	A (m^2)	V=Q/A (m/s)	V^2/2g (mm)	Cum. Hor. Distance (mm)	Cum. Hor. Dist. w/out elbow + red (mm)	EGL HGL+V^2/2g (mm)
9	1	1253.8					0.0		1253.8
	2	1258.2					0.0		1258.2
	3	1259.6					0.0		1259.6
	3.5	1144.8	0.0806	0.067	1.203	73.8	63.4		1218.6
	4	1127.1	0.0806	0.067	1.203	73.8	149.4		1200.9
	5	1177.3	0.0806	0.067	1.203	73.8	292.6		1251.1
	6	1177.4	0.0806	0.067	1.203	73.8	433.4		1251.2
	7	1113.3	0.0806	0.054	1.484	112.3	623.9		1225.6
	9	1069.0	0.0806	0.046	1.764	158.5	1311.3	609.6	1227.5
	10	1054.7	0.0806	0.046	1.764	158.5	1920.9	1219.2	1213.2
	11	1055.7	0.0806	0.046	1.764	158.5	2454.3	1752.6	1214.2
	12	1039.7	0.0806	0.046	1.764	158.5	3140.1	2438.4	1198.2
	13	1035.9	0.0806	0.046	1.764	158.5	3749.7	3048.0	1194.4

Reading #	Port #	HGL (mm)	Q (m^3/s)	A (m^2)	V=Q/A (m/s)	V^2/2g (mm)	Cum. Hor. Distance (mm)	Cum. Hor. Dist. w/out elbow + red (mm)	EGL HGL+V^2/2g (ft)
4	1	1028.9					0.0		1028.9
	2	1029					0.0		1029.0
	3	1029.4					0.0		1029.4
	3.5	1005	0.0370	0.067	0.552	15.5	63.4		1020.5
	4	1007.6	0.0370	0.067	0.552	15.5	149.4		1023.1
	5	1012.2	0.0370	0.067	0.552	15.5	292.6		1027.7
	6	1012.0	0.0370	0.067	0.552	15.5	433.4		1027.5
	7	998.0	0.0370	0.054	0.681	23.7	623.9		1021.7
	9	988.9	0.0370	0.046	0.810	33.4	1311.3	609.6	1022.3
	10	986.3	0.0370	0.046	0.810	33.4	1920.9	1219.2	1019.7
	11	985.8	0.0370	0.046	0.810	33.4	2454.3	1752.6	1019.2
	12	982.1	0.0370	0.046	0.810	33.4	3140.1	2438.4	1015.5
	13	988.0	0.0370	0.046	0.810	33.4	3749.7	3048.0	1021.4

Reading #	Port #	HGL (mm)	Q (m^3/s)	A (m^2)	V=Q/A (m/s)	V^2/2g (mm)	Cum. Hor. Distance (mm)	Cum. Hor. Dist. w/out elbow + red (mm)	EGL HGL+V^2/2g (mm)
10	1	1310.7					0.0		1310.7
	2	1316.1					0.0		1316.1
	3	1316.9					0.0		1316.9
	3.5	1174.2	0.0892	0.067	1.331	90.3	63.4		1264.5
	4	1188.6	0.0892	0.067	1.331	90.3	149.4		1278.9
	5	1215.7	0.0892	0.067	1.331	90.3	292.6		1306.0
	6	1215.6	0.0892	0.067	1.331	90.3	433.4		1305.9
	7	1135.0	0.0892	0.054	1.643	137.5	623.9		1272.5
	9	1083.0	0.0892	0.046	1.952	194.2	1311.3	609.6	1277.2
	10	1065.6	0.0892	0.046	1.952	194.2	1920.9	1219.2	1259.8
	11	1067.1	0.0892	0.046	1.952	194.2	2454.3	1752.6	1261.3
	12	1048.2	0.0892	0.046	1.952	194.2	3140.1	2438.4	1242.4
	13	1044.2	0.0892	0.046	1.952	194.2	3749.7	3048.0	1238.4

Reading #	Port #	HGL (mm)	Q (m^3/s)	A (m^2)	V=Q/A (m/s)	$V^2/2g$ (mm)	Cum. Hor. Distance (mm)	Cum. Hor. Dist. w/out elbow + red (mm)	EGL $HGL+V^2/2g$ (ft)
5	1	1062.8					0.0		1062.8
	2	1063.5					0.0		1063.5
	3	1062.8					0.0		1062.8
	3.5	1026.7	0.0450	0.067	0.672	23.0	63.4		1049.7
	4	1020.6	0.0450	0.067	0.672	23.0	149.4		1043.6
	5	1038.4	0.0450	0.067	0.672	23.0	292.6		1061.4
	6	1039.0	0.0450	0.067	0.672	23.0	433.4		1062.0
	7	1017.3	0.0450	0.054	0.829	35.0	623.9		1052.3
	9	1004.6	0.0450	0.046	0.985	49.4	1311.3	609.6	1054.0
	10	1001.3	0.0450	0.046	0.985	49.4	1920.9	1219.2	1050.7
	11	999.7	0.0450	0.046	0.985	49.4	2454.3	1752.6	1049.1
	12	996.6	0.0450	0.046	0.985	49.4	3140.1	2438.4	1046.0
	13	994.2	0.0450	0.046	0.985	49.4	3749.7	3048.0	1043.6

Reading #	Port #	HGL (mm)	Q (m^3/s)	A (m^2)	V=Q/A (m/s)	$V^2/2g$ (mm)	Cum. Hor. Distance (mm)	Cum. Hor. Dist. w/out elbow + red (mm)	EGL $HGL+V^2/2g$ (mm)
6	1	1100.3					0.0		1100.3
	2	1101.7					0.0		1101.7
	3	1100.6					0.0		1100.6
	3.5	1048.9	0.0531	0.067	0.793	32.0	63.4		1080.9
	4	1050.2	0.0531	0.067	0.793	32.0	149.4		1082.2
	5	1064.5	0.0531	0.067	0.793	32.0	292.6		1096.5
	6	1065.5	0.0531	0.067	0.793	32.0	433.4		1097.5
	7	1036.2	0.0531	0.054	0.978	48.7	623.9		1084.9
	9	1017.0	0.0531	0.046	1.162	68.8	1311.3	609.6	1085.8
	10	1012.0	0.0531	0.046	1.162	68.8	1920.9	1219.2	1080.8
	11	1012.4	0.0531	0.046	1.162	68.8	2454.3	1752.6	1081.2
	12	1006.5	0.0531	0.046	1.162	68.8	3140.1	2438.4	1075.3
	13	1003.5	0.0531	0.046	1.162	68.8	3749.7	3048.0	1072.3

		Reading #	Q (cms)	Headbox EGL	Projected EGL	He (mm)	Ke = $2g/V^2$*He	Average He	Average Ke
Date:	8/6/1997								
Run#:	28								
Data Collected By:	JLK	1*	0.014	1020.9	1017.8	3.07	0.61		
Inlet Description:	# 12	2*	0.027	1050.6	1049.7	0.89	0.05	13.22	0.15
		3*	0.038	1083.1	1084.3	-1.21	-0.03		
Barrel Slope:	2.00%	4	0.046	1123.8	1115.6	8.12	0.16	**Average He (no f)**	**Average Ke**
Inlet Diameter:	11.5 inches	5	0.057	1175.7	1164.6	11.12	0.14		
Barrel Length:	12 feet	6	0.064	1212.7	1198.0	14.75	0.15		
Barrel Area:	0.04573	7	0.070	1248.5	1229.7	18.88	0.16	10.49	0.12
Culvert Barrel Dia:	241.3 mm = 9.5"								
Reducer # :	5	Note = Readings with a " * " were not included in the average							
Reducer length :	14.8125 inches								

Reading #	Q (cms)	He total (mm)	Hf elbow (mm)	Hf reducer (mm)	He (no f) (mm)	Ke (no f)= $2g/V^2$*He
4	0.046	8.12	0.74	0.80	6.58	0.13
5	0.057	11.12	1.18	1.28	8.66	0.11
6	0.064	14.75	1.53	1.66	11.55	0.12
7	0.070	18.88	1.77	1.92	15.18	0.13

Reading #	Port #	HGL (mm)	Q (m^3/s)	A (m^2)	V=Q/A (m/s)	V^2/2g (mm)	Cum. Hor. Distance (mm)	Cum. Hor. Dist. w/out elbow + red (mm)	EGL HGL+V^2/2g (ft)
1	1	1021.5					0.0		1021.5
	2	1020.8					0.0		1020.8
	3	1020.4					0.0		1020.4
	3.5	1016.8	0.0144	0.067	0.215	2.4	63.4		1019.2
	4	1020.8	0.0144	0.067	0.215	2.4	149.4		1023.2
	5	1017.1	0.0144	0.067	0.215	2.4	292.6		1019.5
	6	1016.5	0.0144	0.067	0.215	2.4	433.4		1018.9
	7	1014.8	0.0144	0.061	0.237	2.9	623.9		1017.7
	8	1013.5	0.0144	0.051	0.281	4.0	782.7		1017.5
	9	1012.5	0.0144	0.046	0.315	5.1	1492.3	609.6	1017.6
	10	1011.5	0.0144	0.046	0.315	5.1	2101.9	1219.2	1016.6
	11	1011.3	0.0144	0.046	0.315	5.1	2635.3	1752.6	1016.4
	12	1010.7	0.0144	0.046	0.315	5.1	3321.1	2438.4	1015.8
	13	1010.4	0.0144	0.046	0.315	5.1	3930.7	3048.0	1015.5

Reading #	Port #	HGL (mm)	Q (m^3/s)	A (m^2)	V=Q/A (m/s)	V^2/2g (mm)	Cum. Hor. Distance (mm)	Cum. Hor. Dist. w/out elbow + red (mm)	EGL HGL+V^2/2g (ft)
5	1	1174.8					0.0		1174.8
	2	1176.5					0.0		1176.5
	3	1175.9					0.0		1175.9
	3.5	1118.2	0.0570	0.067	0.851	36.9	63.4		1155.1
	4	1108.9	0.0570	0.067	0.851	36.9	149.4		1145.8
	5	1136.4	0.0570	0.067	0.851	36.9	292.6		1173.3
	6	1135.9	0.0570	0.067	0.851	36.9	433.4		1172.8
	7	1111.5	0.0570	0.061	0.938	44.8	623.9		1156.3
	8	1092.0	0.0570	0.051	1.111	62.9	782.7		1154.9
	9	1082.2	0.0570	0.046	1.247	79.3	1492.3	609.6	1161.5
	10	1076.8	0.0570	0.046	1.247	79.3	2101.9	1219.2	1156.1
	11	1075.1	0.0570	0.046	1.247	79.3	2635.3	1752.6	1154.4
	12	1070.6	0.0570	0.046	1.247	79.3	3321.1	2438.4	1149.9
	13	1066.8	0.0570	0.046	1.247	79.3	3930.7	3048.0	1146.1

Reading #	Port #	HGL (mm)	Q (m^3/s)	A (m^2)	V=Q/A (m/s)	V^2/2g (mm)	Cum. Hor. Distance (mm)	Cum. Hor. Dist. w/out elbow + red (mm)	EGL HGL+V^2/2g (ft)
2	1	1050.3					0.0		1050.3
	2	1050.6					0.0		1050.6
	3	1050.8					0.0		1050.8
	3.5	1039.2	0.0267	0.067	0.399	8.1	63.4		1047.3
	4	1045.8	0.0267	0.067	0.399	8.1	149.4		1053.9
	5	1043.2	0.0267	0.067	0.399	8.1	292.6		1051.3
	6	1043.4	0.0267	0.067	0.399	8.1	433.4		1051.5
	7	1037.5	0.0267	0.061	0.439	9.8	623.9		1047.3
	8	1034.0	0.0267	0.051	0.520	13.8	782.7		1047.8
	9	1031.5	0.0267	0.046	0.584	17.4	1492.3	609.6	1048.9
	10	1030.6	0.0267	0.046	0.584	17.4	2101.9	1219.2	1048.0
	11	1029.5	0.0267	0.046	0.584	17.4	2635.3	1752.6	1046.9
	12	1028.5	0.0267	0.046	0.584	17.4	3321.1	2438.4	1045.9
	13	1028.1	0.0267	0.046	0.584	17.4	3930.7	3048.0	1045.5

Reading #	Port #	HGL (mm)	Q (m^3/s)	A (m^2)	V=Q/A (m/s)	V^2/2g (mm)	Cum. Hor. Distance (mm)	Cum. Hor. Dist. w/out elbow + red (mm)	EGL HGL+V^2/2g (mm)
6	1	1211.4					0.0		1211.4
	2	1213.3					0.0		1213.3
	3	1213.5					0.0		1213.5
	3.5	1140.3	0.0637	0.067	0.951	46.1	63.4		1186.4
	4	1153.1	0.0637	0.067	0.951	46.1	149.4		1199.2
	5	1163.0	0.0637	0.067	0.951	46.1	292.6		1209.1
	6	1162.1	0.0637	0.067	0.951	46.1	433.4		1208.2
	7	1132.8	0.0637	0.061	1.048	55.9	623.9		1188.7
	8	1107.7	0.0637	0.051	1.242	78.6	782.7		1186.3
	9	1094.9	0.0637	0.046	1.394	99.0	1492.3	609.6	1193.9
	10	1087.2	0.0637	0.046	1.394	99.0	2101.9	1219.2	1186.2
	11	1087.3	0.0637	0.046	1.394	99.0	2635.3	1752.6	1186.3
	12	1078.6	0.0637	0.046	1.394	99.0	3321.1	2438.4	1177.6
	13	1075.3	0.0637	0.046	1.394	99.0	3930.7	3048.0	1174.3

Reading #	Port #	HGL (mm)	Q (m^3/s)	A (m^2)	V=Q/A (m/s)	V^2/2g (mm)	Cum. Hor. Distance (mm)	Cum. Hor. Dist. w/out elbow + red (mm)	EGL HGL+V^2/2g (ft)
3	1	1082.3					0.0		1082.3
	2	1083.7					0.0		1083.7
	3	1083.4					0.0		1083.4
	3.5	1061.7	0.0379	0.067	0.566	16.3	63.4		1078.0
	4	1066.4	0.0379	0.067	0.566	16.3	149.4		1082.7
	5	1069.0	0.0379	0.067	0.566	16.3	292.6		1085.3
	6	1069.7	0.0379	0.067	0.566	16.3	433.4		1086.0
	7	1058.6	0.0379	0.061	0.623	19.8	623.9		1078.4
	8	1051.3	0.0379	0.051	0.739	27.8	782.7		1079.1
	9	1047.9	0.0379	0.046	0.829	35.1	1492.3	609.6	1083.0
	10	1045.7	0.0379	0.046	0.829	35.1	2101.9	1219.2	1080.8
	11	1044.8	0.0379	0.046	0.829	35.1	2635.3	1752.6	1079.9
	12	1042.5	0.0379	0.046	0.829	35.1	3321.1	2438.4	1077.6
	13	1041.4	0.0379	0.046	0.829	35.1	3930.7	3048.0	1076.5

Reading #	Port #	HGL (mm)	Q (m^3/s)	A (m^2)	V=Q/A (m/s)	V^2/2g (mm)	Cum. Hor. Distance (mm)	Cum. Hor. Dist. w/out elbow + red (mm)	EGL HGL+V^2/2g (mm)
7	1	1246.6					0.0		1246.6
	2	1249.4					0.0		1249.4
	3	1249.6					0.0		1249.6
	3.5	1160.3	0.0697	0.067	1.040	55.2	63.4		1215.5
	4	1156.0	0.0697	0.067	1.040	55.2	149.4		1211.2
	5	1184.6	0.0697	0.067	1.040	55.2	292.6		1239.8
	6	1188.1	0.0697	0.067	1.040	55.2	433.4		1243.3
	7	1149.1	0.0697	0.061	1.146	67.0	623.9		1216.1
	8	1122.1	0.0697	0.051	1.359	94.1	782.7		1216.2
	9	1105.9	0.0697	0.046	1.525	118.6	1492.3	609.6	1224.5
	10	1098.6	0.0697	0.046	1.525	118.6	2101.9	1219.2	1217.2
	11	1097.1	0.0697	0.046	1.525	118.6	2635.3	1752.6	1215.7
	12	1087.2	0.0697	0.046	1.525	118.6	3321.1	2438.4	1205.8
	13	1083.9	0.0697	0.046	1.525	118.6	3930.7	3048.0	1202.5

Reading #	Port #	HGL (mm)	Q (m^3/s)	A (m^2)	V=Q/A (m/s)	V^2/2g (mm)	Cum. Hor. Distance (mm)	Cum. Hor. Dist. w/out elbow + red (mm)	EGL HGL+V^2/2g (ft)
4	1	1123.7					0.0		1123.7
	2	1123.4					0.0		1123.4
	3	1124.2					0.0		1124.2
	3.5	1085	0.0457	0.067	0.682	23.7	63.4		1108.7
	4	1094.6	0.0457	0.067	0.682	23.7	149.4		1118.3
	5	1097.7	0.0457	0.067	0.682	23.7	292.6		1121.4
	6	1098.0	0.0457	0.067	0.682	23.7	433.4		1121.7
	7	1082.1	0.0457	0.061	0.752	28.8	623.9		1110.9
	8	1070.1	0.0457	0.051	0.891	40.4	782.7		1110.5
	9	1063.1	0.0457	0.046	1.000	51.0	1492.3	609.6	1114.1
	10	1059.1	0.0457	0.046	1.000	51.0	2101.9	1219.2	1110.1
	11	1058.0	0.0457	0.046	1.000	51.0	2635.3	1752.6	1109.0
	12	1055.3	0.0457	0.046	1.000	51.0	3321.1	2438.4	1106.3
	13	1053.4	0.0457	0.046	1.000	51.0	3930.7	3048.0	1104.4

Date:	8/1/1997
Run#:	27
Data Collected By:	JLK
Inlet Description:	# 12
Barrel Slope:	0.015
Inlet Diameter:	11.5 inches
Barrel Length:	12 feet
Barrel Area:	0.04573
Culvert Barrel Dia:	241.3 mm = 9.5"
Reducer # :	5
Reducer length :	14.8125 inches

Reading #	Q (cms)	Headbox EGL	Projected EGL	He (mm)	Ke = $2g/V^2$*He	Average He	Average Ke
1*	0.012	1025.3	1022.3	2.96	0.80		
2*	0.026	1056.2	1055.9	0.28	0.02	12.16	0.15
3*	0.035	1089.4	1086.2	3.22	0.11		
4	0.045	1132.0	1125.2	6.86	0.14	**Average He**	**Average Ke**
5	0.057	1187.9	1176.1	11.83	0.15		
6	0.070	1248.5	1230.7	17.79	0.15		
						9.92	0.12

Note = Readings with a " * " were not included in the average

Reading #	Q (cms)	He (mm)	Hf elbow (mm)	Hf reducer (mm)	He (no f) (mm)	Ke (no f) $2g/V^2$*He
4	0.045	7.49	0.67	0.73	6.08	0.12
5	0.057	11.83	1.13	1.22	9.48	0.12
6	0.070	17.79	1.72	1.87	14.20	0.12

Reading #	Port #	HGL (mm)	Q (m^3/s)	A (m^2)	V=Q/A (m/s)	$V^2/2g$ (mm)	Cum. Hor. Distance (mm)	Cum. Hor. Dist. w/out elbow + red (mm)	EGL HGL+$V^2/2g$ (ft)
1	1	1025.6					0.0		1025.6
	2	1025.2					0.0		1025.2
	3	1025.1					0.0		1025.1
	3.5	1021.8	0.0123	0.067	0.184	1.7	63.4		1023.5
	5	1021.7	0.0123	0.067	0.184	1.7	292.6		1023.4
	6	1021.6	0.0123	0.067	0.184	1.7	433.4		1023.3
	7	1020.6	0.0123	0.061	0.202	2.1	623.9		1022.7
	8	1019.3	0.0123	0.051	0.240	2.9	782.7		1022.2
	9	1018.4	0.0123	0.046	0.269	3.7	1492.3	609.6	1022.1
	10	1018.0	0.0123	0.046	0.269	3.7	2101.9	1219.2	1021.7
	11	1018.0	0.0123	0.046	0.269	3.7	2635.3	1752.6	1021.7
	12	1017.5	0.0123	0.046	0.269	3.7	3321.1	2438.4	1021.2
	13	1017.3	0.0123	0.046	0.269	3.7	3930.7	3048.0	1021.0

Reading #	Port #	HGL (mm)	Q (m^3/s)	A (m^2)	V=Q/A (m/s)	$V^2/2g$ (mm)	Cum. Hor. Distance (mm)	Cum. Hor. Dist. w/out elbow + red (mm)	EGL HGL+$V^2/2g$ (ft)
4	1	1130.8					0.0		1130.8
	2	1132.5					0.0		1132.5
	3	1132.8					0.0		1132.8
	3.5	1095.3	0.0452	0.067	0.675	23.2	63.4		1118.5
	5	1107.0	0.0452	0.067	0.675	23.2	292.6		1130.2
	6	1108.0	0.0452	0.067	0.675	23.2	433.4		1131.2
	7	1091.5	0.0452	0.061	0.743	28.2	623.9		1119.7
	8	1078.3	0.0452	0.051	0.881	39.6	782.7		1117.9
	9	1073.3	0.0452	0.046	0.989	49.9	1492.3	609.6	1123.2
	10	1069.8	0.0452	0.046	0.989	49.9	2101.9	1219.2	1119.7
	11	1068.4	0.0452	0.046	0.989	49.9	2635.3	1752.6	1118.3
	12	1065.7	0.0452	0.046	0.989	49.9	3321.1	2438.4	1115.6
	13	1063.2	0.0452	0.046	0.989	49.9	3930.7	3048.0	1113.1

Reading #	Port #	HGL (mm)	Q (m^3/s)	A (m^2)	V=Q/A (m/s)	$V^2/2g$ (mm)	Cum. Hor. Distance (mm)	Cum. Hor. Dist. w/out elbow + red (mm)	EGL HGL+$V^2/2g$ (ft)
2	1	1056.0					0.0		1056.0
	2	1056.3					0.0		1056.3
	3	1056.3					0.0		1056.3
	3.5	1046.1	0.0259	0.067	0.387	7.6	63.4		1053.7
	5	1049.3	0.0259	0.067	0.387	7.6	292.6		1056.9
	6	1049.7	0.0259	0.067	0.387	7.6	433.4		1057.3
	7	1044.8	0.0259	0.061	0.426	9.2	623.9		1054.0
	8	1041.0	0.0259	0.051	0.505	13.0	782.7		1054.0
	9	1039.1	0.0259	0.046	0.567	16.4	1492.3	609.6	1055.5
	10	1038.0	0.0259	0.046	0.567	16.4	2101.9	1219.2	1054.4
	11	1037.3	0.0259	0.046	0.567	16.4	2635.3	1752.6	1053.7
	12	1036.5	0.0259	0.046	0.567	16.4	3321.1	2438.4	1052.9
	13	1036.3	0.0259	0.046	0.567	16.4	3930.7	3048.0	1052.7

Reading #	Port #	HGL (mm)	Q (m^3/s)	A (m^2)	V=Q/A (m/s)	$V^2/2g$ (mm)	Cum. Hor. Distance (mm)	Cum. Hor. Dist. w/out elbow + red (mm)	EGL HGL+$V^2/2g$ (ft)
5	1	1186.9					0.0		1186.9
	2	1189					0.0		1189.0
	3	1187.8					0.0		1187.8
	3.5	1129.3	0.0574	0.067	0.857	37.4	63.4		1166.7
	5	1147.9	0.0574	0.067	0.857	37.4	292.6		1185.3
	6	1147.7	0.0574	0.067	0.857	37.4	433.4		1185.1
	7	1123.4	0.0574	0.061	0.944	45.4	623.9		1168.8
	8	1103.8	0.0574	0.051	1.119	63.8	782.7		1167.6
	9	1092.4	0.0574	0.046	1.256	80.4	1492.3	609.6	1172.8
	10	1087.4	0.0574	0.046	1.256	80.4	2101.9	1219.2	1167.8
	11	1086.8	0.0574	0.046	1.256	80.4	2635.3	1752.6	1167.2
	12	1081.2	0.0574	0.046	1.256	80.4	3321.1	2438.4	1161.6
	13	1077.9	0.0574	0.046	1.256	80.4	3930.7	3048.0	1158.3

Reading #	Port #	HGL (mm)	Q (m^3/s)	A (m^2)	V=Q/A (m/s)	$V^2/2g$ (mm)	Cum. Hor. Distance (mm)	Cum. Hor. Dist. w/out elbow + red (mm)	EGL HGL+$V^2/2g$ (mm)
3	1	1088.6					0.0		1088.6
	2	1089.7					0.0		1089.7
	3	1089.9					0.0		1089.9
	3.5	1068.9	0.0349	0.067	0.521	13.8	63.4		1082.7
	5	1074.8	0.0349	0.067	0.521	13.8	292.6		1088.6
	6	1075.8	0.0349	0.067	0.521	13.8	433.4		1089.6
	7	1065.9	0.0349	0.061	0.574	16.8	623.9		1082.7
	8	1059.1	0.0349	0.051	0.680	23.6	782.7		1082.7
	9	1055.3	0.0349	0.046	0.764	29.7	1492.3	609.6	1085.0
	10	1053.2	0.0349	0.046	0.764	29.7	2101.9	1219.2	1082.9
	11	1052.9	0.0349	0.046	0.764	29.7	2635.3	1752.6	1082.6
	12	1050.7	0.0349	0.046	0.764	29.7	3321.1	2438.4	1080.4
	13	1049.7	0.0349	0.046	0.764	29.7	3930.7	3048.0	1079.4

Reading #	Port #	HGL (mm)	Q (m^3/s)	A (m^2)	V=Q/A (m/s)	$V^2/2g$ (mm)	Cum. Hor. Distance (mm)	Cum. Hor. Dist. w/out elbow + red (mm)	EGL HGL+$V^2/2g$ (mm)
6	1	1247.0					0.0		1247.0
	2	1248.6					0.0		1248.6
	3	1249.8					0.0		1249.8
	3.5	1161.1	0.0695	0.067	1.037	54.8	63.4		1215.9
	5	1188.1	0.0695	0.067	1.037	54.8	292.6		1242.9
	6	1189.2	0.0695	0.067	1.037	54.8	433.4		1244.0
	7	1150.5	0.0695	0.061	1.143	66.6	623.9		1217.1
	8	1123.3	0.0695	0.051	1.355	93.5	782.7		1216.8
	9	1108.6	0.0695	0.046	1.521	117.9	1492.3	609.6	1226.5
	10	1099.5	0.0695	0.046	1.521	117.9	2101.9	1219.2	1217.4
	11	1099.1	0.0695	0.046	1.521	117.9	2635.3	1752.6	1217.0
	12	1089.9	0.0695	0.046	1.521	117.9	3321.1	2438.4	1207.8
	13	1086.5	0.0695	0.046	1.521	117.9	3930.7	3048.0	1204.4