Final Report
Iowa Highway Research Board
Project HR-269

DATA ACQUISITION AND COMPUTER PLOTTING OF DELAMTECT DATA

D & D Digital Systems, Inc.

September 1985

In cooperation with the
Highway Division

Iowa Department of Transportation

D & D Digital Systems
"Computer Engineering"

P.O. Box 1802
111 Lynn
Ames, Iowa 50010
(515) 292-0490

FINAL REPORT

PROJECT : HR - 269

DATA ACQUISITION AND COMPUTER PLOTTING OF DELAMTECT DATA

SUBMITTED TO: IOWA DEPARTMENT OF TRANSPORTATION

SUBMITTED BY: D & D DIGITAL SYSTEMS INC
111 LYNN
AMES, IOWA 50010

DATE: JULY 1, 1985

1.0 SYSTEM OVERVIEW

The overall system is designed to permit automatic collection of delamination field data for bridge decks. In addition to measuring and recording the data in the field, the system provides for transferring the recorded data to a personal computer for processing and plotting. This permits rapid turnaround from data collection to a finished plot of the results in a fraction of the time previously required for manual analysis of the analog data captured on a strip chart recorder.

1.1 DELAMTECT

In normal operation the Delamtect provides an analog voltage for each of two channels which is proportional to the extent of any delamination. These voltages are recorded on a strip chart for later visual analysis. An event marker voltage, produced by a momentary push button on the handle, is also provided by the Delamtect and recorded on a third channel of the analog recorder.

1.2 D & D DATA ACQUISTION SYSTEM (DAS)

A distance measuring wheel was added to provide digital pulses indicating distance traveled.

A microprocessor based digital computer was designed to sample both analog signals from the Delamtect, convert them to digital numbers, and transmit these numbers to a cassette recorder. The Delamtect event marker switch and distance measuring wheel are monitored by this computer to control when to begin and stop the process of sampling the analog signals and how often samples should be taken.

1.3 TECHTRAN RECORDER

A digital cassette recorder was added to the system to record the digital numbers which are equivalent to the analog voltages from the two Delamtect channels. Digital recorders have the ability to directly receive digital data and record at high densities. The recorder has been mounted such that it can be removed from the Delamtect and transported to a computer site. There the digitally recorded data can be read and transferred from the recorder to the computer for further processing and plotting.

1.4 SPERRY/ZENITH/IBM PC PLOTTING PROGRAMS

Two programs have been developed to be run on the SPERRY/ZENITH/IBM PC.

The first program is designed to read data files recorded on the Techtran. Each pass across the bridge constitutes a file of data. As each data file is read, it is checked for correct sequence and length characteristics before being written to a disk file on the PC.

The second program is designed to process the data files and produce a plot of the results on a dot matrix printer operating in graphics mode which visually shows where delaminations exist in the area surveyed. Selected choices for type of plot and printer are provided. The voltage level to be used as a threshold for determining the presence of a delamination is also provided as a choice.

Communication between the Techtran and the PC is through the asynchronous COM1 port. The printer is attached through the Centronics compatible PRN port.

1.5 TEXAS INSTRUMENTS 855 PRINTER

The TI 855 dot matrix printer was specified to be the primary print device. Choices for the kind of plot desired include one which fills the width of the paper and one which presents uniform horizontal and vertical scales.

Header information describing the bridge ID, date, total area, delaminated area, etc. is also printed on each plot.

2.0 THEORY OF OPERATION

The following sections describe some of the technical aspects of the design by functional component. Technical design details can be found from the circuit schematics and program listings in the appendices of this report.

2.1 DELAMTECT

Each channel of the Delamtect provides an analog signal with a voltage ranging from 0 to approximately 5 volts. In areas of no delamination, the voltage is approximately 0.1 to 0.3 volt. Major delamination areas have been judged to occur where changes in voltage exceed 400 millivolts which correspond to 4 mm deflection on the chart paper. Where extreme delamination occurs, voltage changes or fluctuations in excess of 2 volts occur.

The sensitivity of the strip chart recorder is typically set for 1 volt/cm or 100 millivolt/mm.

The event marker switch creates a signal of 0 or approximately 2.0 volts when it is open or closed.

Power supply voltages of +12 and -12 volts DC are supplied by the Delamtect.

No modifications have been made to the original Delamtect circuits.

Only wiring taps to the power supply, channel voltages and event marker switch have been added to route these signals to the D & D DAS for processing. These taps are wired to a new connector added to the Delamtect but do not alter the original signals. An external wiring harness extends these signals to the DAS mounted in the lid of the Techtran recorder.

2.2 D & D DATA ACQUISITION SYSTEM (DAS)

A distance measuring wheel was added to provide 10 pulses per inch of travel. These become 5 volt pulse inputs to the DAS. This was chosen to avoid problems with integrating a DC voltage from the tachometer on the Techtran to compute distance traveled.

Two eight-bit analog-to-digital converters (one for each channel) are used with a 5 volt maximum input voltage which provides for a 20 millivolt per bit sensitivity. This sensitivity corresponds to a 0.2 mm deflection on the strip chart recorder.

In 3 inches of travel, 30 distance pulses are received. The analog voltages from the Delamtect are sampled and digitized after 6 pulses (0.6 inch) are received This is repeated five times during every 3 inches of travel. The average of the first 4 samples is computed and transmitted to the Techtran recorder after the fifth sample period. The fifth sample point is ignored. Thus, each 3 inches of travel results in a value being sent to the recorder for each channel (two bytes; left channel followed by right channel). These values represent the computed average of 4 sample values during 3 inch interval.

An offset of 32 (base 10) is added to each digitized value. The maximum value after offset adjustment is limited to 127 (base 10). This insures no spurious CTRL characters (0 to 31) are sent to the recorder which might alter its operational status. Additionally, characters are transmitted over a serial RS-232C interface in 7 bit even parity codes which limits the maximum value to 127. This corresponds to 1.9 volts which is well in excess of any reasonable delamination threshold level.

To insure the tape is properly positioned with respect to tape leader in the Techtran recorder, a sequence of four one-second read commands followed by a rewind command is initiated on powerup. The green light on the top of the recorder case momentarily turns on and then off at the beginning of the powerup sequence.

The green light on the top of the recorder case should be on when a pass begins and off at the end of the pass. This is accomplished by the operator confidently pushing the marker event switch once at the beginning and end of each pass to toggle the light from off to on or from on to off.

Data files for each pass are transmitted to the Techtran recorder which begin with a 'Pass number sequence character' (A,B,C,D,E, etc.), followed by pairs of averaged data bytes (Left, Right), and ending with a file termination character CTRL-S.

A custom program stored in an EPROM on the DAS controls all this activity among the Delamtect, distance wheel, and recorder.

2.3 TECHTRAN RECORDER

The 9600PRL recorder has several switch settings which should remain unchanged throughout the operations.

LINE MODE SWITCH = OFF (DOWN POSITION)
BINARY MODE SWITCH = ONLINE (CENTER POSITION)

DIP SWITCHES BENEATH THE LIFT OFF COVER PLATE ARE SET TO

1: + 9600 BAUD
2: + 9600 BAUD
3: - DISABLE BS
4: - HALF DUPLEX
5: - DISABLE DELAY
6: - LF LINEMODE
7: - BIN CTRL OFF
8: - DELAY ON LF
9: - EVEN PARITY
10: + ENABLE PARITY

Cassette insertion and removal is done by pressing the POWER pushbutton (it will illuminate), then manually lifting the door latch allowing the door to swing open, and inserting or removing the cassette. The magnetic tape side should face down into the recorder, the cassette label should be visible through the window, and the large tape spool should be on the left if it is rewound.

New tapes should be rewound forward and backward to remove any static binding which may initially exist.

Used tapes should be demagnetized with the bulk eraser before being removed. Approximately 5 - 10 seconds is long enough to remove all previously recorded data.

The internal battery pack should be charged during the night preceding any field tests. Techtran verbally estimates a minimum of 5-6 hour operation time between charges.

Each digital cassette tape is rated to hold up to 220,000 characters or bytes which is well within the maximum limit of 64,000 characters or bytes permitted by the applications program for the SPERRY/ZENITH/IBM PC.

During data collection on a bridge, the TERMINAL PORT is used to connect the Techtran to the DAS. The MODEM/CPU PORT should be disconnected during this operation.

After data has been collected, the MODEM/CPU PORT is used to connect the Techtran to the SPERRY/ZENITH/IBM PC COM1 port.

The TERMINAL PORT should be disconnected during this operation.

2.4 SPERRY/ZENITH/IBM PC PROGRAMS

Two programs have been written to process the data collected on the Techtran recorder called TAPEREAD and BRIDGE.

TAPEREAD reads the data from cassette tape, does some verification of the data, and writes it to a disk file for subsequent processing.

BRIDGE reads the data from the disk file and plots it on a dot matrix printer according to user selected options.

The maximum length on the bridge for a single pass is software constrained to 6000 feet.

A data space of 64K bytes (8 bits = 1 byte) is reserved in the PC for a bit map of the bridge deck where each bit represents a 3 inch distance traveled in a 9 inch wide path. Two channels provide for combined 18 inch wide passes.

Every foot of travel provides 4 data values (one for every 3 inches of travel) for each of 2 channels. Thus, a total of 8 data values exist for every foot of travel. Each of these values represents the condition of a 3 inch by 9 inch surface area which is either delaminated or not delaminated. Once yes or no decision about delamination has been determined, only a single bit is required to represent that result (1 = delaminated, 0 = not delaminated). Thus, 1 byte (8 bits) can be used to represent the status of 8 areas each 3x9 inches. This is equivalent to a total area of 12 x 18 inches or 1 foot of travel for the 18 inch wide Delamtect path.

Thus, the maximum surface area which may be represented in a 64K (64,000) bit map can be found as follows:

PASSES	LENGTH	TOTAL
10	6000 ft	60,000 bytes
21	3000	63,000
42	1500	63,000
64	1000	64,000
128	500	64,000

etc.

There is also a limitation of the maximum surface area which may be surveyed at one time based upon the disk capacity

associated with the SPERRY/ZENITH/IBM PC. Floppy disk drives have a maximum capacity of 320K or 360K bytes depending upon the version of DOS which is being used.

Two files are created by the TAPEREAD program. The first is a temporary file which contains a copy of the data read from the Techtran recorder. This temporary file is always written to the default system disk drive. The second file is the disk file which contains the data without the sequence numbers and end of file characters. In addition, the second file contains a header record with information about the bridge. A user prompt for the file name can also include a disk drive designation if one other than the present default drive is desired.

Since each pass contains 2 channels of data and pairs of data are recorded for every 3 inches of travel, 8 data bytes are recorded for every foot of travel on a pass. Thus, the maximum pass-foot distance which can be written to a 320K disk file is 40K and the maximum for a 360K disk file is 45K.

This would lower the size of a deck surface which can be handled for a 320K diskette to

PASSES	LENGTH	TOTAL
10	4000 ft	40,000 bytes
20	2000	40,000

etc.

A PC with a winchester (hard) disk drive does not have this size constraint since files in excess of 100,000 bytes present no space problem provided the disk is not full with other information.

A 64 byte header record is used in the PC data file for bridge identification and layout parameters.

Documented in the source code listing, this 64 character string variable contains

Information	Bytes In File			Comment
Bridge Id	0		32	
# Passes		33		A,B,C, ...
Length in samples	34	-	35	Binary, high byte 1st
Normal or Slewed		36		N,n,S,s
Distance in inches (R)	37	-	38	Binary, high byte 1st
Distance in inches (L)	39	-	40	Binary, high byte 1st
Start Right/Left		37		R,r,L,l
Date Info	42	-	54	
Extra space	55	-	63	
Bridge data	64	-	??	

Bridge data in the PC files do not alternate between left and right channels every byte. Instead, all left channel data for one pass is written to the disk, then all right channel data for the same pass is written. This pattern then repeats for the number of valid passes associated with the bridge deck.

Disk filenames follow standard MS DOS conventions and can have up to 8 characters with an optional 3 character extension, such as 'BR125437.DAT'. Disk drive information in addition to this limit is allowed, i.e. B:MAXWELL.DAT .

Bridge names can be up to 32 characters long.
Dates can be up to 10 characters long.

It is important that the length of the first pass be accurate since it is used as the reference for all following passes. Passes which are shorter in length have additional low voltage data added equally to both ends of the file to fill it out to a standard length. Passes which are longer in length have data truncated equally from both ends until the standard length is reached.

If the first pass is short (less than 10 feet) the program will display a prompt on the PC screen to ask if it is to really be used. If the answer is n (no), it will read the second pass and treat it as a new first pass.

If a subsequent pass is short (less than 90% of the first pass), a displayed prompt will request if it is to be used or ignored. This could occur in the middle of a field test

if the event marker switch was inadvertently pushed at the wrong time.

If a record is out of sequence (i.e. record 5 follows record 3), an option is displayed to permit a choice of using it, skipping it, or inserting a blank (no delaminations) record of data before this record. This should not occur, but gremlins occasionally show up in any system, and this provides a degree of partial recovery of the data.

The goal of the TAPEREAD program features described above is to create a disk file of sequential records from cassette files. This disk file will have identical data lengths for each pass with appropriate master header information about the name, date of test, size, and type of bridge being tested.

The BRIDGE program processes data from the PC data file previously created by TAPEREAD.

While reading in a disk data file but prior to plotting, an average baseline value for each side of each pass is computed by finding the most frequent value. Delaminations are then determined by deviations above this baseline value by some selected amount. A default of 400 millivolts (20 decimal above the baseline value) may be altered by a user prompt. This information is then placed into a memory bit map which is referred to by subsequent plotting programs.

Two delamination plots can be selected.

1: 8 Inches Wide
2: 4 Dots Per 3 Inches

An 8 inches wide plot utilizes the full width of the paper. Horizontal scaling varies with the number of passes.

A 4 dots per 3 inches of deck surface plot achieves uniform horizontal and vertical scaling within the physical limits of the printer.

One percentage plot can also be selected.

P: Percentages

A percentage plot separates the deck into 4 ft by 3 ft grids and prints the percentage of delaminated area in each grid box in addition to an overall percentage of delaminated area for the entire deck.

Bridge decks wider than 30 feet (20 passes) will be plotted in a compressed mode when using the percentage plot (P). The maximum width in this mode is 60 feet.

Bridge decks wider than 33 (22 passes) feet will be plotted in a compressed mode for graphical delamination plots (1, 2). The maximum width in this mode is 66 feet.

Bridge decks can be rectangular or skewed. If skewed, the distance in inches from the left and from the right rectangular starting line to the actual deck is requested by the TAPEREAD program.

Each plot prints information about the bridge name, date of field test, delamination threshold, length and width of the bridge deck, total area, and the percentage of the total area where delaminations exist. If the bridge is skewed, the left and right skew distances are also printed. Calculations of total area and percentage of delaminated area do not include the skewed area outside of the bridge deck.

Passes for a bridge can start on the left or on the right. Once started, subsequent passes are always in the opposite direction to the previous pass in an up and back manner. The bottom of the printed plot will correspond to the starting end of the bridge survey.

2.5 TEXAS INSTRUMENTS 855 PRINTER

Printers generally have more problems with compatibility than computers. While the printers may indeed have comparable capabilities, programming them into the same operating mode is often done in ways unique to each printer.

There is a big difference between functional compatibility and hardware compatibility. Therefore, each new printer should be approched with doubt as to having it function in anything but a standard manner without hardware or software modifications.

A choice of 4 printer types is given in the BRIDGE program.

T : TI 855 Printer
S : Star Radix Printer
E : Epson Printer
A : Alphanumeric Printer

The Alphanumeric Printer assumes no graphics dot matrix capability is present, so it will only print header summary information typically found at the beginning of each

delamination plot. In addition, it will also plot the Percentages (P) plot since it prints only standard alphanumeric characters.

The TI 855 printer is placed into DP mode under program control and left there when done. If this is not the normal mode, it can easily be restored by turning the power switch of the printer off and then back on.

TI and the Star RADIX printers have a 72 dots/inch plotting density. Epson MX/FX printers have a 60 dots/inch plotting density. Even more of a problem is that each type of printer typically has a different code sequence to put it into a so-called 'compatible' mode.

The uniform vertical and horizontal scale plot at 4 dots per 3 inches is achieved by occasionally skipping a dot in the vertical direction. Perfect scaling is not feasible. However, when reduced to a 10 scale size (1 in = 10 ft), the perturbation should not be observable.

3.0 OPERATING INSTRUCTIONS

3.1 DATA ACQUISTION PROCEDURES

1. TURN ON THE DELAMTECT FOR WARMUP AND RUN NORMAL CALIBRATION PROCEDURES.

2. PRESS POWER SWITCH OF RECORDER ON (SWITCH LIGHT WILL TURN ON). SET RECORDER LINE MODE SWITCH OFF (DOWN) AND BINARY SWITCH ONLINE (CENTER). DO NOT CLOSE THE LID YET.

3. INSERT TAPE IN RECORDER (TAPE EDGE IN FIRST & LABEL SHOWING IN WINDOW). PLUG IN RIBBON CABLE FROM RECORDER LID TO TERMINAL CONNECTOR ON RECORDER.

4. LOWER THE DISTANCE WHEEL AND INSERT HOLDING PIN IN OTHER HOLE.

5. TURN POWER SWITCH OF DELAMTECT OFF & ON.

   (**DO NOT TURN POWER SWITCH OFF AGAIN UNTIL SURVEY IS COMPLETE**).

   THE TRANSMITTER AND OPERATE/CALIBRATE SWITCH CAN BE CYCLED ON/OFF AT WILL.

   (** THE GREEN LIGHT ON THE RECORDER LID WILL CYCLE ON AND OFF ONCE. THE TAPE RECORDER READ SWITCH SHOULD THEN AUTOMATICALLY CYCLE ON & OFF 4 TIMES FOLLOWED BY AN AUTOMATIC REWIND CYCLE TO CORRECTLY POSITION THE TAPE LEADER. THE REWIND, READ, AND WRITE SWITCH LIGHTS SHOULD BE OFF AND THE POWER SWITCH LIGHT SHOULD BE ON AT THIS TIME. **)

   REPEAT THIS STEP UNTIL THE CORRECT RECORDER STATUS IS OBSERVED.

6. CLOSE THE RECORDER LID AND MOVE INTO POSITION ON BRIDGE IF NOT ALREADY THERE. IF IT IS A SKEWED BRIDGE, NOTE THE DISTANCE FROM BASE LINE TO BRIDGE DECK IN INCHES OF THE RIGHT AND LEFT SIDES.

7. TURN ON DELAMTECT TRANSMITTER (THIS MAY BE TURNED ON AND OFF AS NEEDED DURING THE SURVEY).

8. PUSH EVENT SWITCH ONLY ONCE TO START A PASS (GREEN LIGHT ON RECORDER SHOULD MUST BE ON TO RECORD!!) IF INADVERTENTLY PUSHED TWICE ON FIRST PASS, GO BACK TO STEP 5 AND START OVER. IF ADAVERTENTLY PUSHED TWICE ON SUBSEQUENT PASSES, PUSH AGAIN UNTIL LIGHT COMES ON AND

PROCEED BUT NOTE THIS OCCURENCE SO THAT THE SHORT RECORD OF DATA CAN BE TOSSED OUT BY THE COMPUTER OPERATOR WHEN LATER READ BY THE COMPUTER FOR PROCESSING.

9. AT END OF EACH PASS, PUSH EVENT SWITCH ONCE TO TURN GREEN RECORDER LIGHT OFF AND STOP DATA COLLECTION FOR THAT PASS.

10. TURN THE DELAMTECT AROUND (PRESS DOWN ON THE HANDLE TO ALLOW THE DISTANCE MEASURING WHEEL TO RAISE FROM THE SURFACE AND AVOID DAMAGE BY TWISTING).

11. PUSH EVENT BUTTON TO START THE NEXT PASS (THE GREEN RECORDER LIGHT SHOULD TURN ON AGAIN, ETC).

12. WHEN DONE WITH LAST PASS, TURN OFF THE DELAMTECT TRANSMITTER, OPEN THE RECORDER LID, PUSH THE REWIND PUSHBUTTON SWITCH OF THE RECORDER TO REWIND TAPE. REMOVE THE TAPE, TURN THE TAPE RECORDER POWER OFF, AND THEN TURN DELAMTECT POWER OFF. RAISE DISTANCE WHEEL AND LOCK UP WITH THE HOLDING PIN.

3.2 COMPUTER PLOTTING PROCEDURES

1. A SYSTEM DISK SHOULD BE FORMATTED ON THE TARGET COMPUTER AND A COPY OF TAPEREAD.EXE AND BRIDGE.EXE COPIED TO IT. THIS BECOMES A MASTER PROGRAM DISK. TO CALL UP EITHER PROGRAM, SIMPLY TYPE 'TAPEREAD' OR 'BRIDGE'.

   AT LEAST 2 FORMATTED DATA DISKS SHOULD BE AVAILABLE TO USE WITH THE TAPEREAD PROGRAM. FOR SMALL BRIDGES, BOTH THE TEMPORARY FILE AND FINAL DATA FILE CAN PROBABLY FIT ON ONE DATA DISKETTE IN DRIVE B:. FOR LARGER BRIDGES, A DATA DISK MIGHT BE NECESSARY IN BOTH FLOPPY DRIVES (A: & B:). AFTER THE TAPEREAD PROGRAM IS LOADED, THE EXTRA DATA DISK CAN BE PLACED IN THE SYSTEM DEFAULT DRIVE A:.

2. AN RS-232 CABLE IS REQUIRED TO CONNECT THE TECHTRAN RECORDER TO THE COM1 PORT ON THE SPERRY/ZENITH/IBM PC. THE SPERRY COM1 PORT IS FOUND ON THE BACK NEAR THE CENTER BOTTOM IN A HORIZONTAL POSITION.

3. AFTER CONNECTING THE CABLE BETWEEN THE RECORDER AND THE COMPUTER, AND BOOTING THE PROGRAM DISK, TURN THE TAPE RECORDER ON AND INSERT THE CASSETTE TAPE WITH THE BRIDGE SURVEY DATA.

4. PROGRAM 'TAPEREAD' IS USED FIRST TO TRANSFER THE DATA FROM THE RECORDER TO THE COMPUTER. PROMPTS ARE DISPLAYED AND RESPONSED NEED TO BE TYPED FOR

   BRIDGE ID:
   DATE:
   START ON RIGHT OR LEFT SIDE
   NORMAL OR SKEWED:
   IF SKEWED, RIGHT AND LEFT SKEW DISTANCE:

   INFORMATION ABOUT THE PASS NUMBER AND FILE LENGTHS ARE DISPLAYED HERE. IF SHORT PASSES OR SEQUENCE PROBLEMS EXIST, PROMPTS FOR DESIRED OPERATOR ACTIONS ARE REQUESTED HERE.

   DISK FILE NAME:

   THE DISK FILE NAME CAN ALSO BE PRECEEDED WITH THE DISK DRIVE ID IF OTHER THAN THE DEFAULT, IE. B:BR123456.DAT

   IF NO DRIVE IS SPECIFIED, FILES WILL BE WRITTEN TO THE DEFAULT DRIVE.

5. THE 'BRIDGE' PROGRAM CAN NOW BE USED TO CALCULATE A BIT MAP AND PLOT THE RESULTS ON THE ATTACHED TI 855 PRINTER.

A PROMPT FOR THE DISK FILE NAME WITH THE SURVEY DATA IS ISSUED. THE BRIDGE NAME IS DISPLAYED ON THE SCREEN, AND A PROMPT IS ISSUED FOR THE DELAMINATION VOLTAGE WITH 400 MV BEING THE DEFAULT VALUE WHICH IS USED IF THE RETURN KEY IS SIMPLY PUSHED RATHER THAN A NUMBER.

AT THIS TIME THE DATA IS READ IN, AVERAGES COMPUTED, AND DELAMINATION DECISIONS ARE WRITTEN TO A MEMORY BIT MAP. THE LONGER THE DATA FILE, THE LONGER THIS TAKES. THE DISK DRIVE MAY BE OBSERVED TO DETERMINE IF RECORDS ARE STILL BEING READ IN AND PROCESSED PRIOR TO COMMENCEMENT OF PLOTTING.

PLOTTING CHOICES OF PRINTER TYPE ARE DISPLAYED WITH THE CURRENT CHOICE HIGHLIGHTED ON THE SCREEN.

THREE TYPES OF PLOTS MAY NOW BE SELECTED BY TYPING

1: 8 INCH WIDE GRAPHICS PLOT
2: 4 DOTS PER 3 INCH GRAPHICS PLOT WITH EQUAL SCALES
OR P: PERCENTAGES IN EACH 4' X 3' GRID BOX

THE SAME DATA CAN BE PLOTTED AGAIN WITH DIFFERENT CHOICES FOR DELAMINATION THRESHOLD VOLTAGE.

A.0 APPENDICES : TECHNICAL REFERENCE MATERIALS

A.1 DELAMTECT SCHEMATICS AND MODIFICATIONS

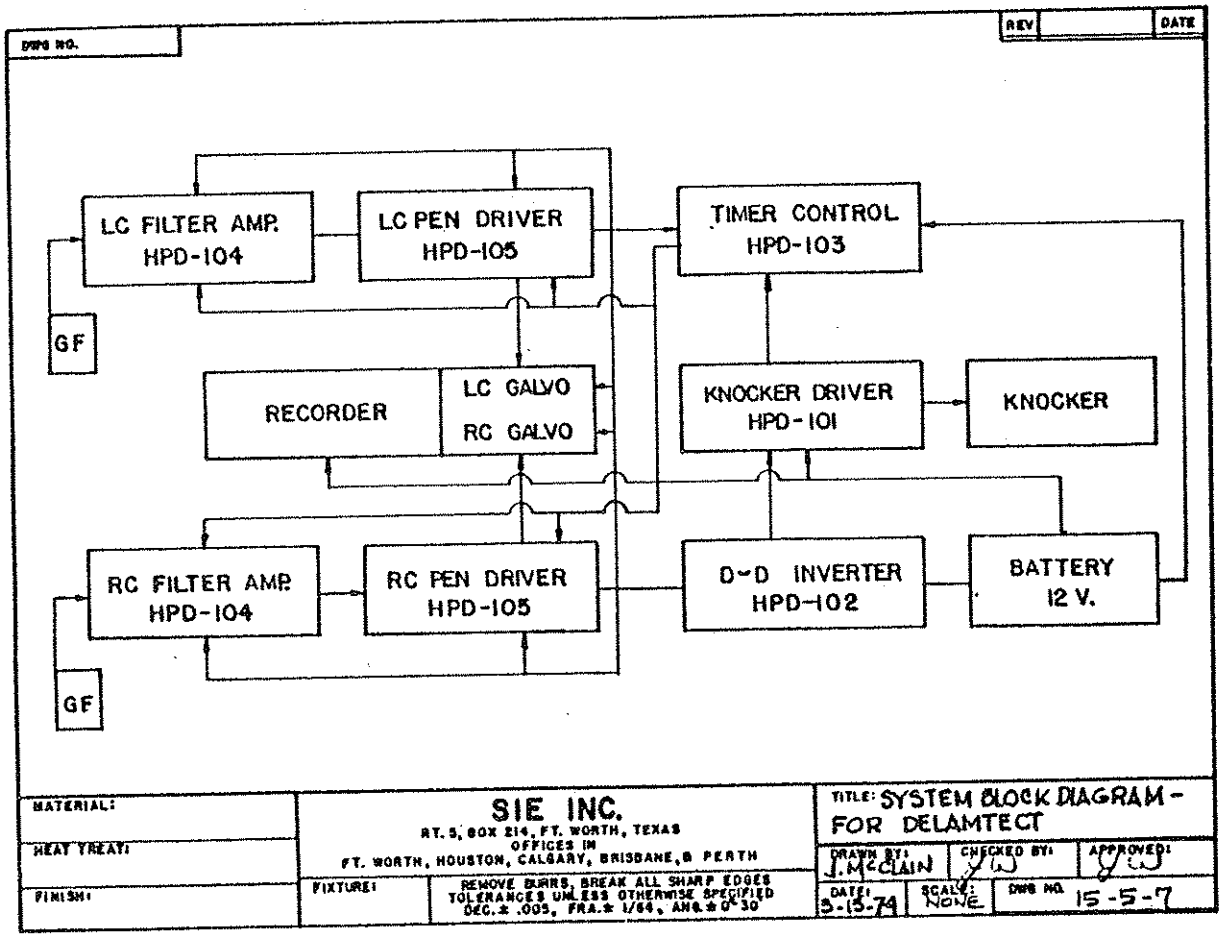

Figure 15

JAN 14 1983

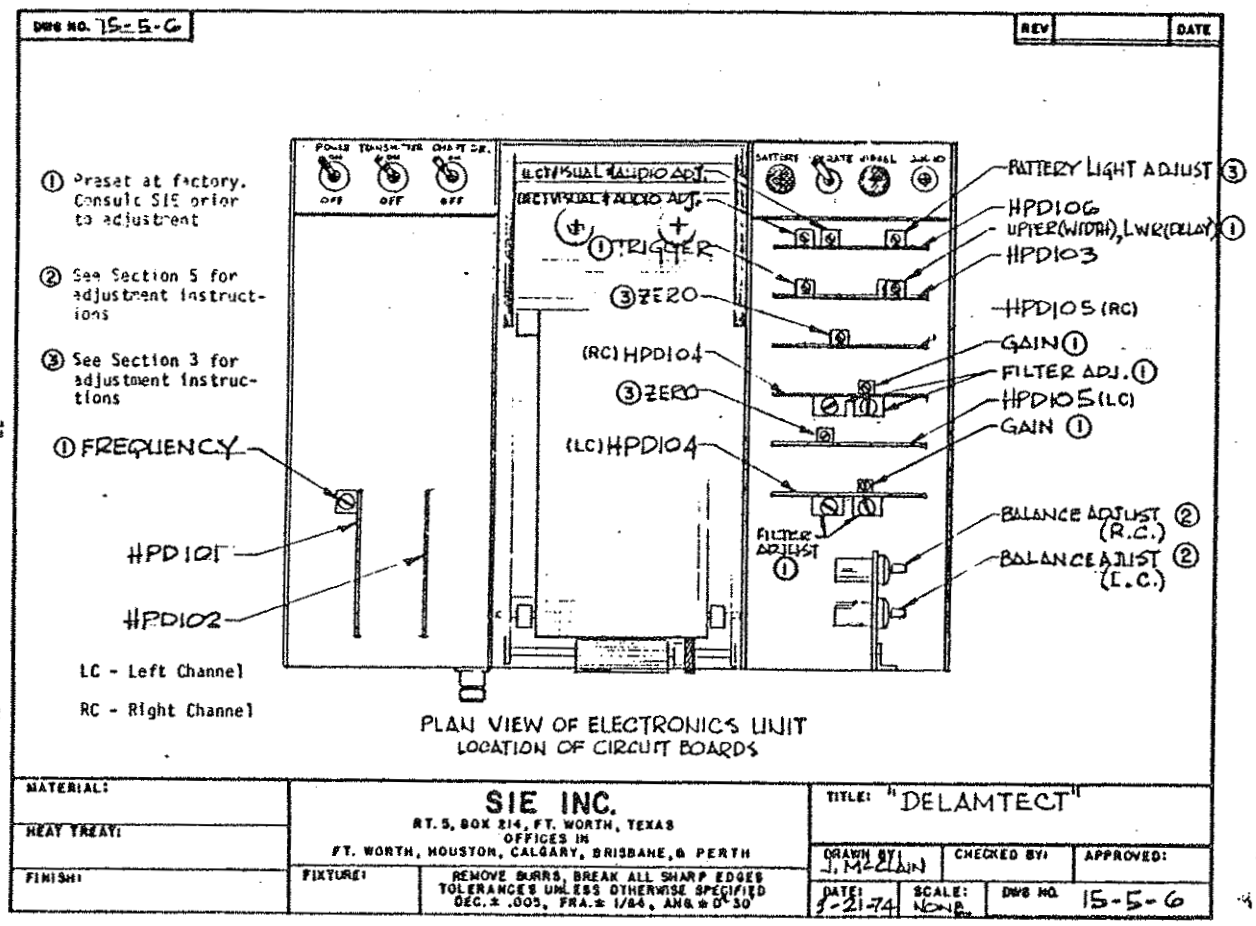

Figure 14

37

JAN 14 1983

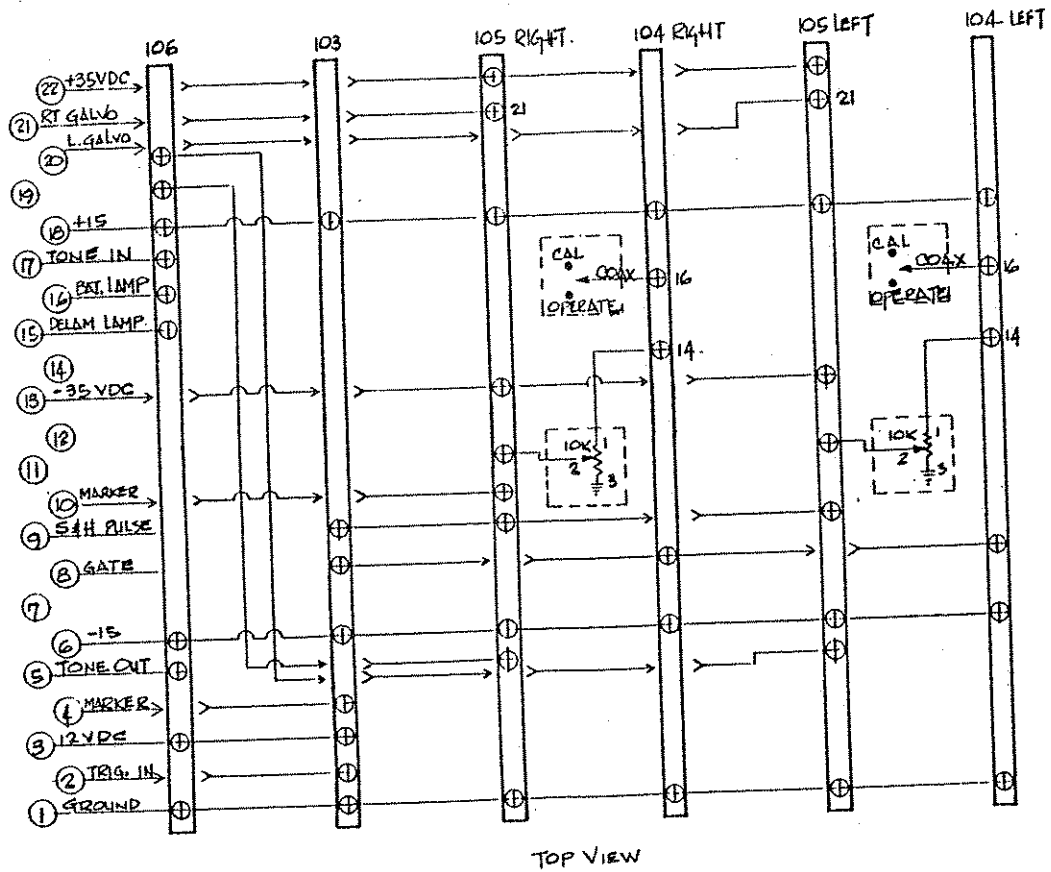

TOP VIEW

JAN 14 1983

NEXT ASSY	REQD	MATERIAL	TOLERANCES FRACTIONS ± .015 .XX ± .01 .XXX ± .00	RADIATION ENG. & MFG. CO. FORT WORTH, TEXAS
		FIXTURE:		TITLE: DIAGRAM FOR P.C. BOARDS — DELAMTEC
		DRAWN BY: J. McCLAIN	DATE: 1-14-76	SCALE: NONE DWG NO. 15-5-17

Fig. 18

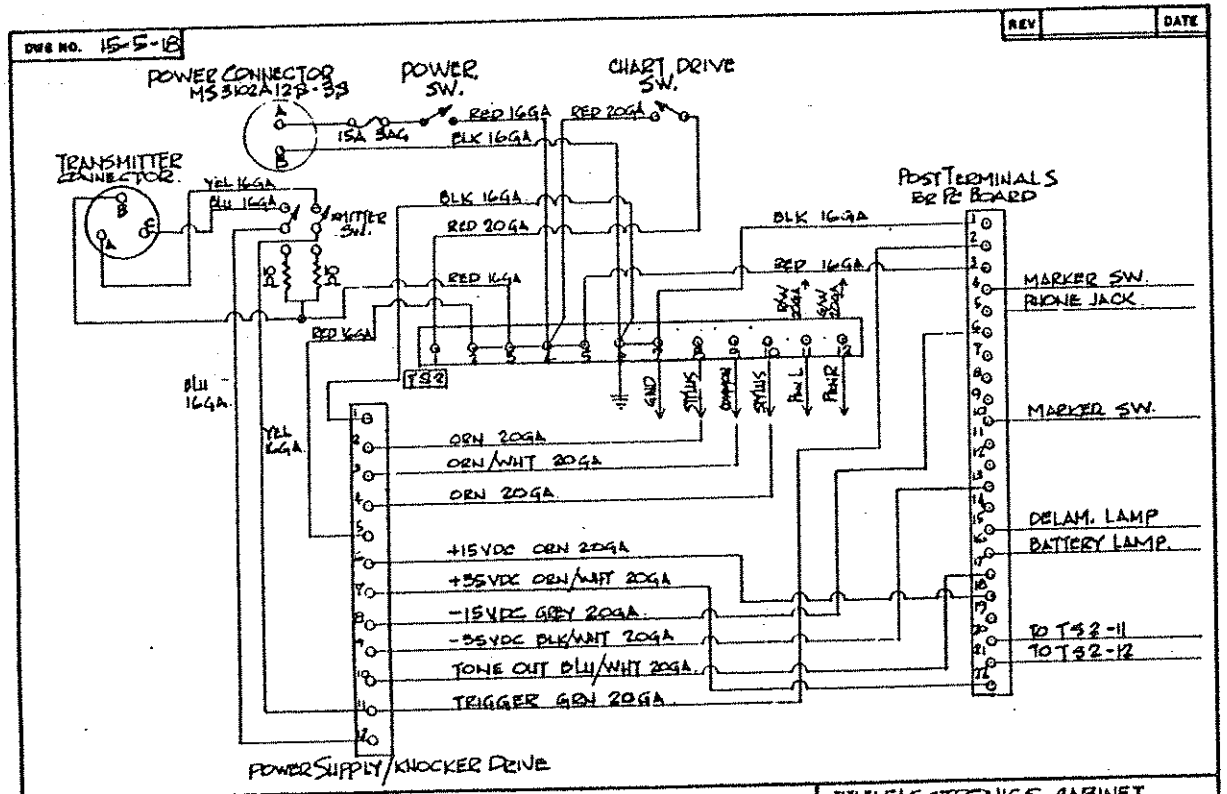
DWG NO. 15-5-18
REV
DATE
POWER CONNECTOR MS3102A12B-3S
POWER SW.
CHART DRIVE SW.
15A 3AG
RED 16GA
BLK 16GA
RED 20GA
TRANSMITTER CONNECTOR
YEL 16GA
BLU 16GA
TRANSMITTER SW.
BLK 16GA
RED 20GA
RED 16GA
RED 16GA
BLU 16GA
YEL 16GA
TS2
GND
STYLUS
CHARGE
STYLUS
PEN L
PEN R
BLK 16GA
RED 16GA
POST TERMINALS ON PC BOARD
MARKER SW.
PHONE JACK
MARKER SW.
DELAM. LAMP
BATTERY LAMP
TO TS2-11
TO TS2-12
ORN 20GA
ORN/WHT 20GA
ORN 20GA
+15VDC ORN 20GA
+35VDC ORN/WHT 20GA
-15VDC GRY 20GA
-35VDC BLK/WHT 20GA
TONE OUT BLU/WHT 20GA
TRIGGER GRN 20GA
POWER SUPPLY/KNOCKER DRIVE
MATERIAL:
HEAT TREAT:
FINISH:
SIE INC.
RT. 5, BOX 214, FT. WORTH, TEXAS
OFFICES IN
FT. WORTH, HOUSTON, CALGARY, BRISBANE, & PERTH
FIXTURE:
REMOVE BURRS, BREAK ALL SHARP EDGES
TOLERANCES UNLESS OTHERWISE SPECIFIED
DEC. ± .005, FRA. ± 1/64, ANG. ± 0° 30'
TITLE: ELECTRONICS CABINET -DELAMTEC
DRAWN BY: J. McCLAIN
CHECKED BY:
APPROVED:
DATE: 12-8-76
SCALE: NONE
DWG NO. 15-5-18

JAN 14 1983

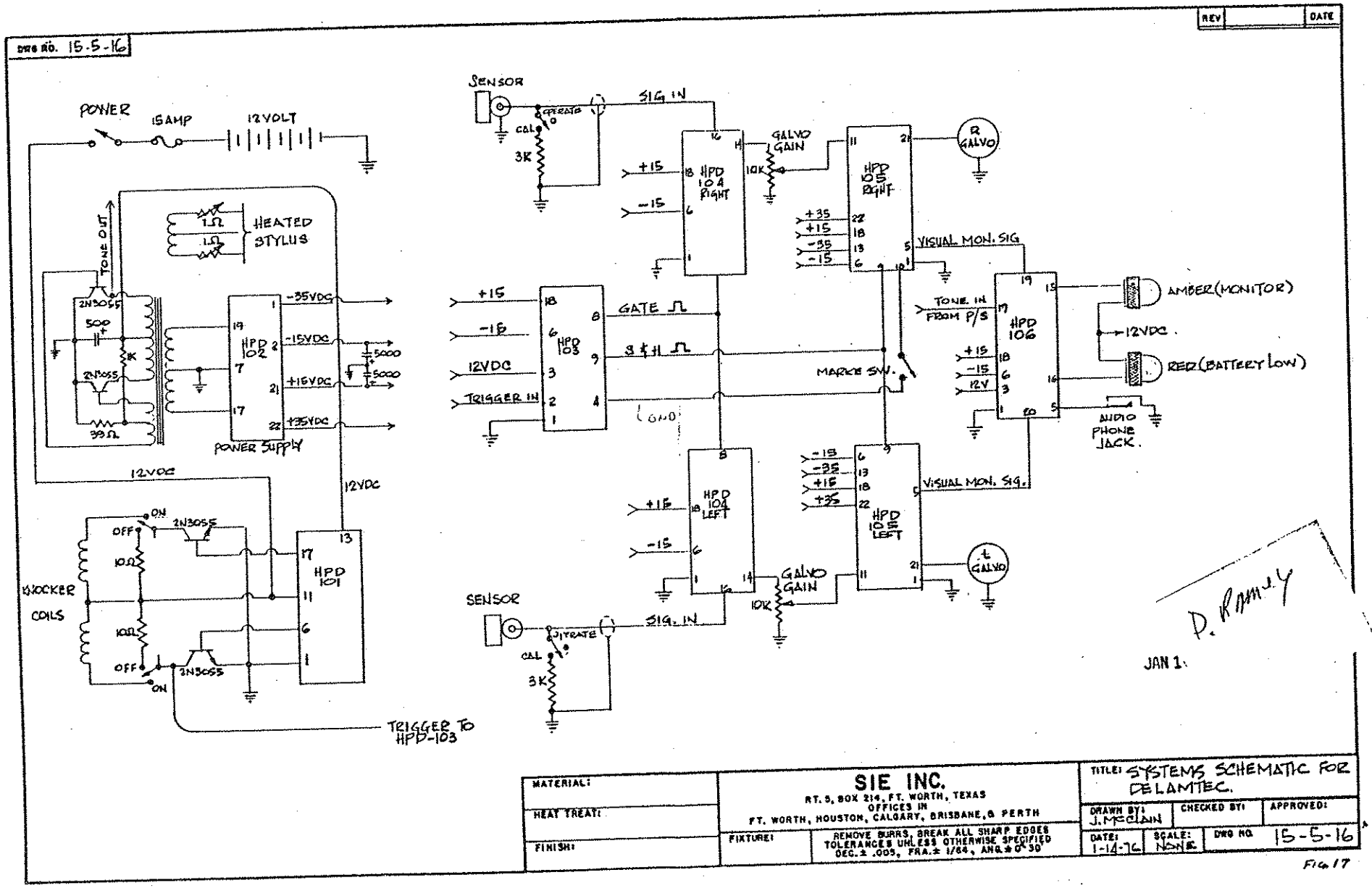
DWG NO. 15-5-16
REV
DATE
POWER
15AMP
12VOLT
TONE OUT
HEATED STYLUS
1Ω
1Ω
2N3055
500
8K
2N3055
39Ω
HPD 102
-35VDC
-15VDC
+15VDC
+35VDC
5000
5000
POWER SUPPLY
12VDC
12VDC
ON
OFF
2N3055
10Ω
KNOCKER COILS
10Ω
OFF
ON
2N3055
HPD 101
TRIGGER TO HPD-103
SENSOR
OPERATE
CAL
3K
SIG IN
+15
-15
HPD 104 RIGHT
GALVO GAIN
10K
HPD 105 RIGHT
R GALVO
+35
+15
-35
-15
VISUAL MON. SIG
+15
-15
12VDC
TRIGGER IN
HPD 103
GATE
3 KHZ
GND
MARKS SW.
TONE IN FROM P/S
HPD 106
+15
-15
12V
AMBER (MONITOR)
12VDC
RED (BATTERY LOW)
AUDIO PHONE JACK
+15
-15
HPD 104 LEFT
GALVO GAIN
10K
SIG. IN
SENSOR
OPERATE
CAL
3K
-15
-35
+15
+35
HPD 105 LEFT
VISUAL MON. SIG.
L GALVO
D. RAMSEY
JAN 1
MATERIAL:
HEAT TREAT:
FINISH:
SIE INC.
RT. 5, BOX 214, FT. WORTH, TEXAS
OFFICES IN
FT. WORTH, HOUSTON, CALGARY, BRISBANE, & PERTH
FIXTURE:
REMOVE BURRS, BREAK ALL SHARP EDGES
TOLERANCES UNLESS OTHERWISE SPECIFIED
DEC. ± .005, FRA. ± 1/64, ANG. ± 0° 30'
TITLE: SYSTEMS SCHEMATIC FOR DELAMTEC.
DRAWN BY: J. McCLAIN
CHECKED BY:
APPROVED:
DATE: 1-14-76
SCALE: NONE
DWG NO. 15-5-16

Fig 17

DWG NO. 15-5-19

REV | DATE

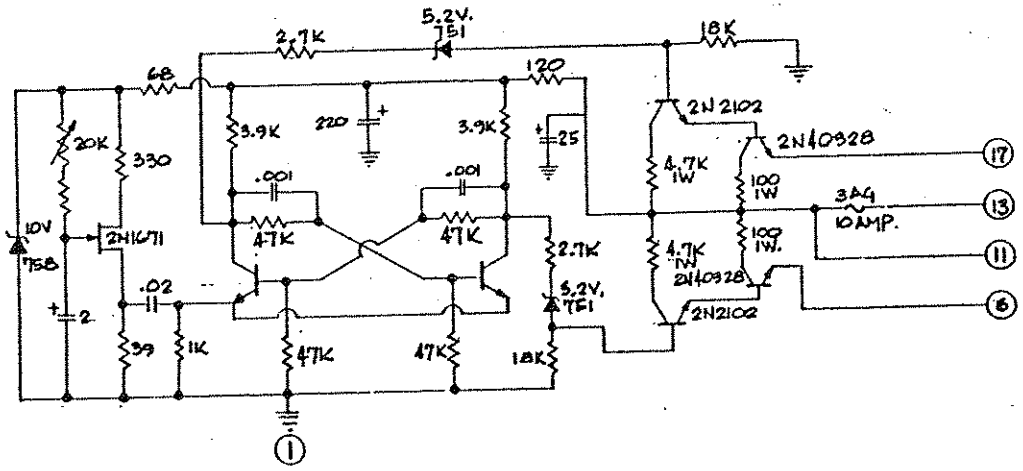

PIN USAGE

1. GROUND
6. TO 2N3055B
11. FUSED 12V. OUT
13. 12V. IN
17. TO 2N3055B

MATERIAL:	SIE INC. RT. 3, BOX 214, FT. WORTH, TEXAS OFFICES IN FT. WORTH, HOUSTON, CALGARY, BRISBANE, & PERTH	TITLE: KNOCKER DRIVER HPD-101, DELAMTEC
HEAT TREAT:		DRAWN BY: J. McCLAIN / CHECKED BY: / APPROVED:
FINISH:	FIXTURE: / REMOVE BURRS, BREAK ALL SHARP EDGES TOLERANCES UNLESS OTHERWISE SPECIFIED DEC. ± .005, FRA. ± 1/64, ANG. ± 0° 30'	DATE: 10-18-79 / SCALE: NONE / DWG NO. 15-5-19

Fig. 20

JAN 14 1983

DWG NO. 15-5-20

REV		DATE

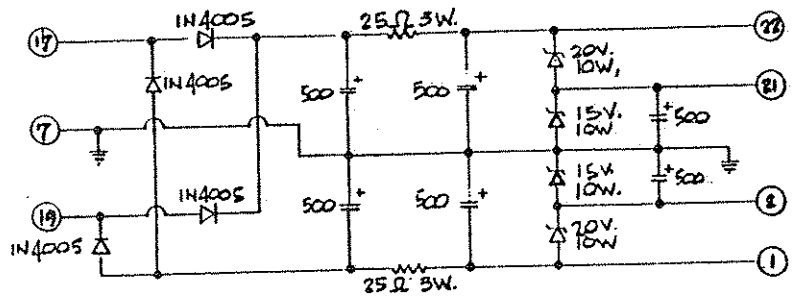

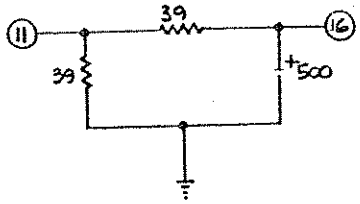

PIN USAGE

1	-35V.D.C.
2	-15V.DC.
7	GND
11	TO RELAY 4
16	12V.D.C.
17	AC IN
19	AC IN
21	+15V.D.C.
22	+35VDC

MATERIAL:	**SIE INC.** RT. 5, BOX 214, FT. WORTH, TEXAS OFFICES IN FT. WORTH, HOUSTON, CALGARY, BRISBANE, & PERTH	TITLE: POWER SUPPLY — HPD-102, DELAMTEC
HEAT TREAT:		DRAWN BY: J. McCLAIN / CHECKED BY: / APPROVED:
FINISH:	FIXTURE: / REMOVE BURRS, BREAK ALL SHARP EDGES TOLERANCES UNLESS OTHERWISE SPECIFIED DEC. ± .005, FRA. ± 1/64, ANG. ± 0° 30'	DATE: 10-20-75 / SCALE: NONE / DWG NO. 15-5-20

Fig. 21

JAN 14 1983

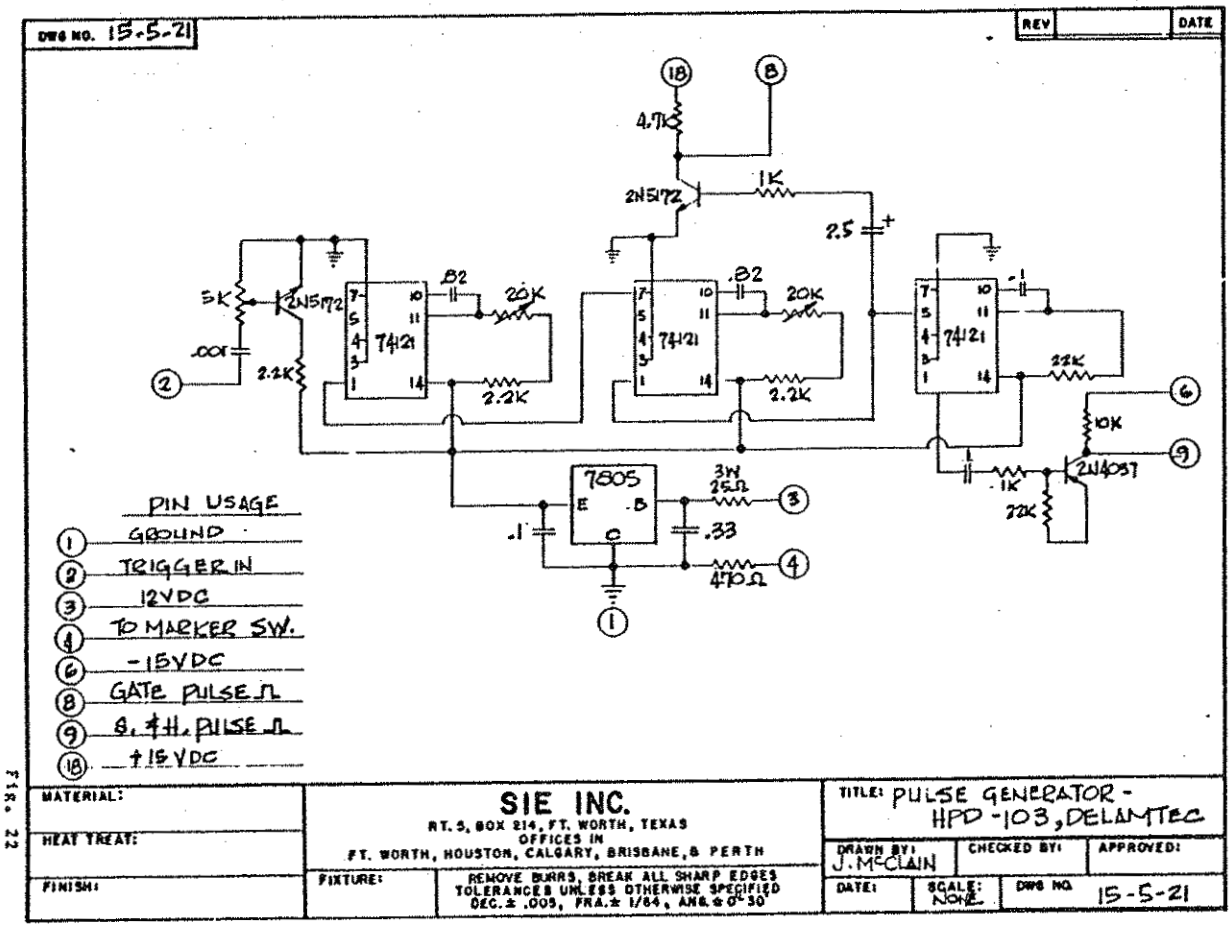

FIG. 22

JAN 14 1983

DWG NO. 15-5-22

REV		DATE

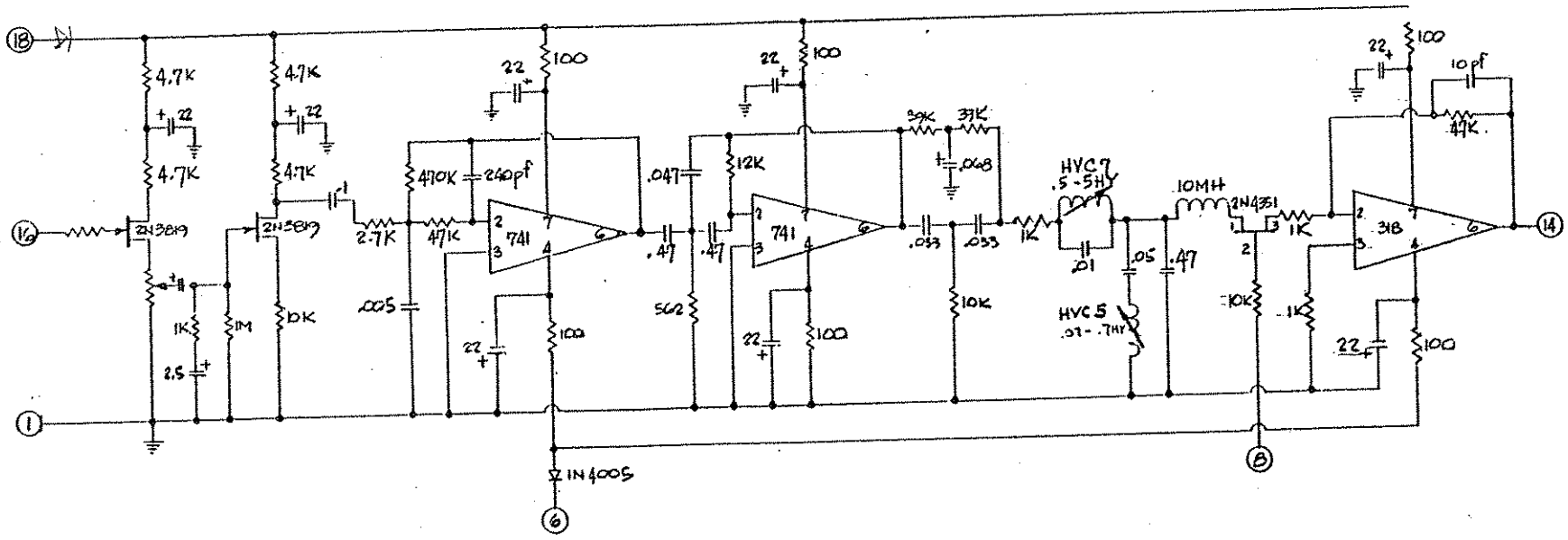

PIN USAGE

1	GND
6	-15VDC
8	GATE ⊓⊔
14	OUTPUT
16	SIGNAL IN
18	+15VDC

JAN 14 1983

MATERIAL:	SIE INC. RT. 5, BOX 214, FT. WORTH, TEXAS OFFICES IN FT. WORTH, HOUSTON, CALGARY, BRISBANE, & PERTH	TITLE: AMPLIFIER/FILTER BOARD HPD-104 DELAMTEC	
HEAT TREAT:		DRAWN BY: J. McCAIN	CHECKED BY: / APPROVED:
FINISH:	FIXTURE: / REMOVE BURRS, BREAK ALL SHARP EDGES TOLERANCES UNLESS OTHERWISE SPECIFIED DEC.± .005, FRA.± 1/64, ANG.± 0° 30'	DATE: 1-14-76 / SCALE: NONE	DWG NO. 15-5-22

Fig. 23

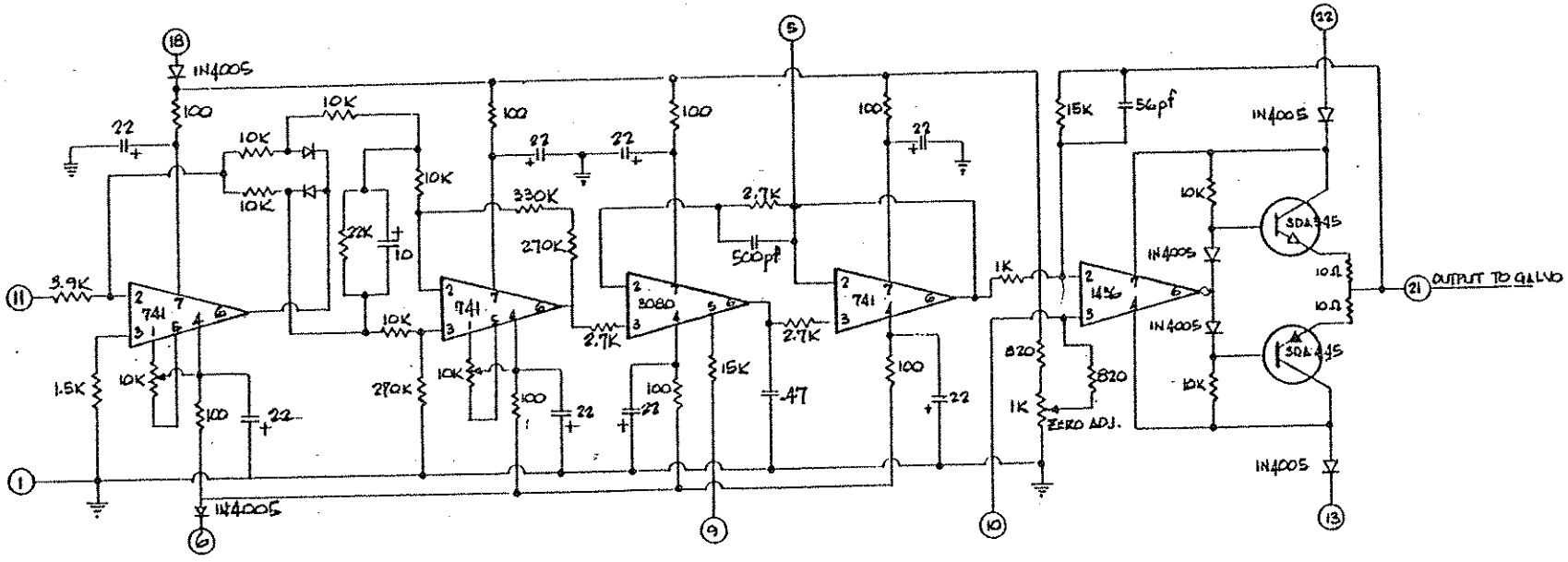

JAN 14 1983

Pin Usage

1	GROUND
5	MONITOR SIG.
6	-15VDC
9	S+H PULSE Ω
10	MARKER SW.
11	INPUT
13	-35VDC.
18	+15VDC.
22	+35VDC.

NEXT ASSY	REQD	MATERIAL	TOLERANCES	RADIATION ENG. & MFG. CO. FORT WORTH, TEXAS
			FRACTIONS ± .015 .XX ± .01 .XXX ± .00	TITLE: GALVO DRIVE BOARD – HPD-105, DELAMTEC
		FIXTURE:		
		DRAWN BY: J. McCLAIN	DATE: 12-9-75	SCALE: NONE DWG NO. 15-5-23

Fig. 24

A.2 D & D DATA ACQUISITION SYSTEM

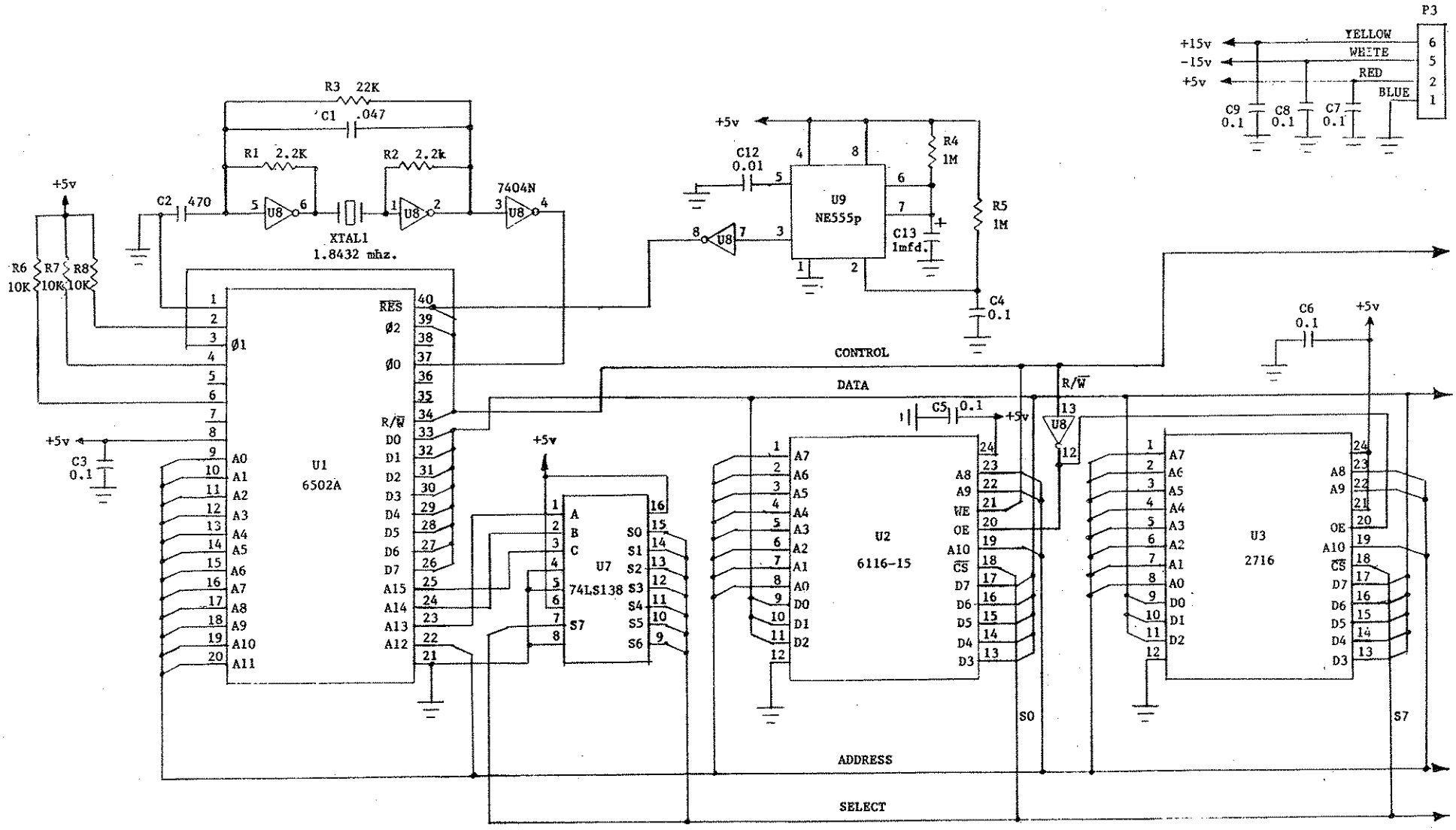

6502 A/D BOARD
SHT 1

D & D DIGITAL SYSTEMS
AMES, IOWA
JUNE 30, 1985

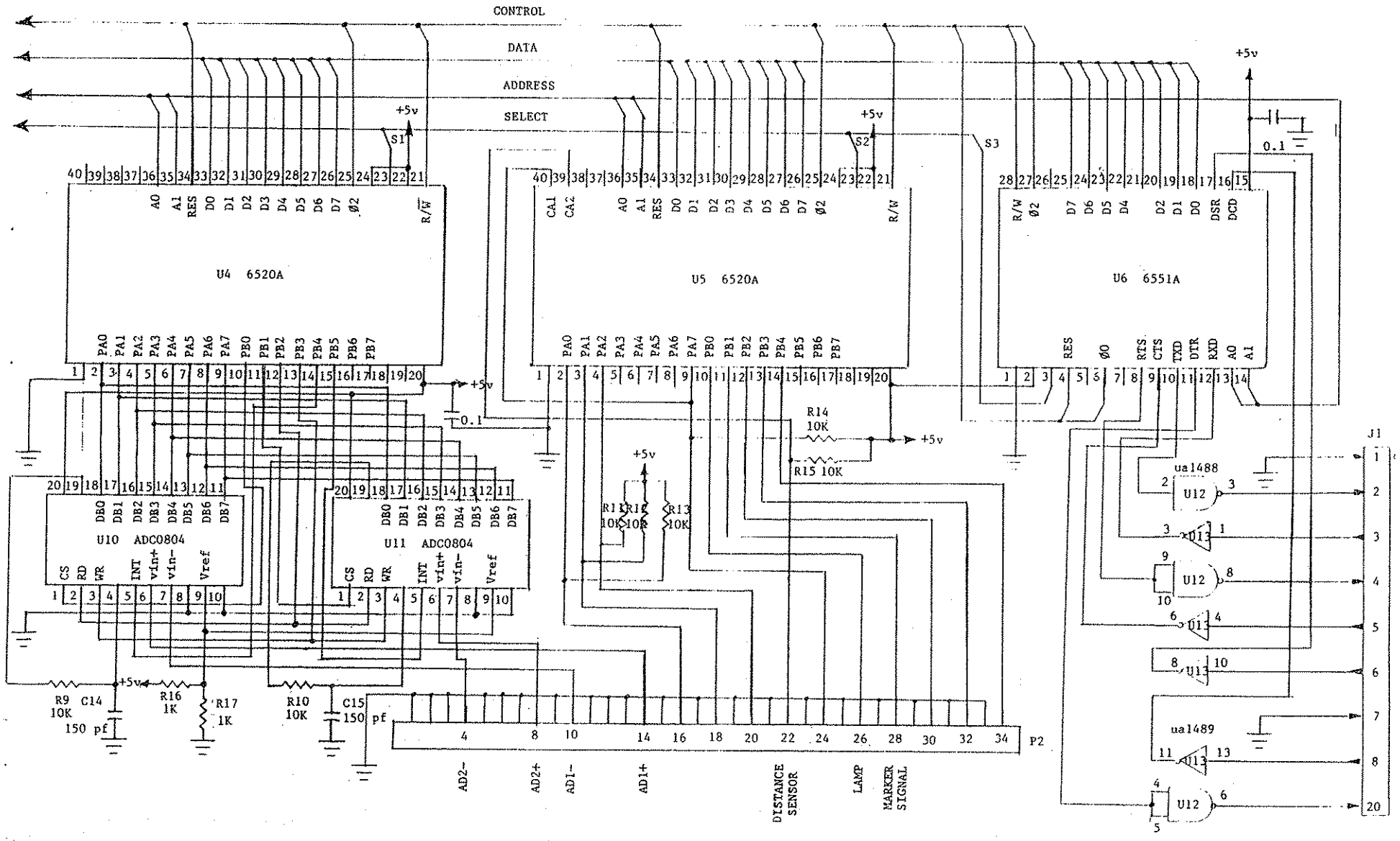

6502 A/D BOARD SHT 2

D & D DIGITAL SYSTEMS
AMES, IOWA
JUNE 30, 1985

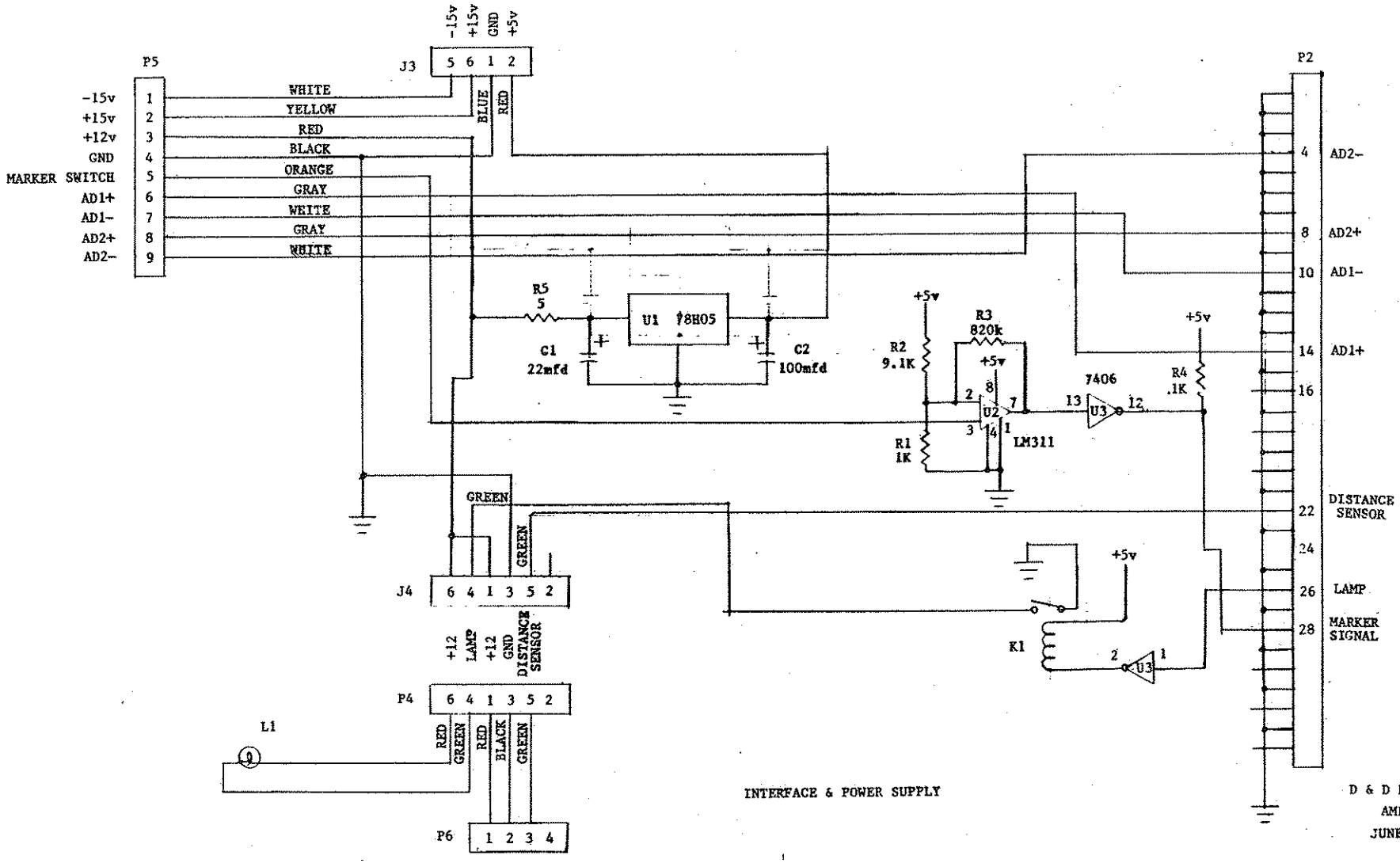

INTERFACE & POWER SUPPLY

D & D DIGITAL SYSTEMS
AMES, IOWA
JUNE 30, 1985

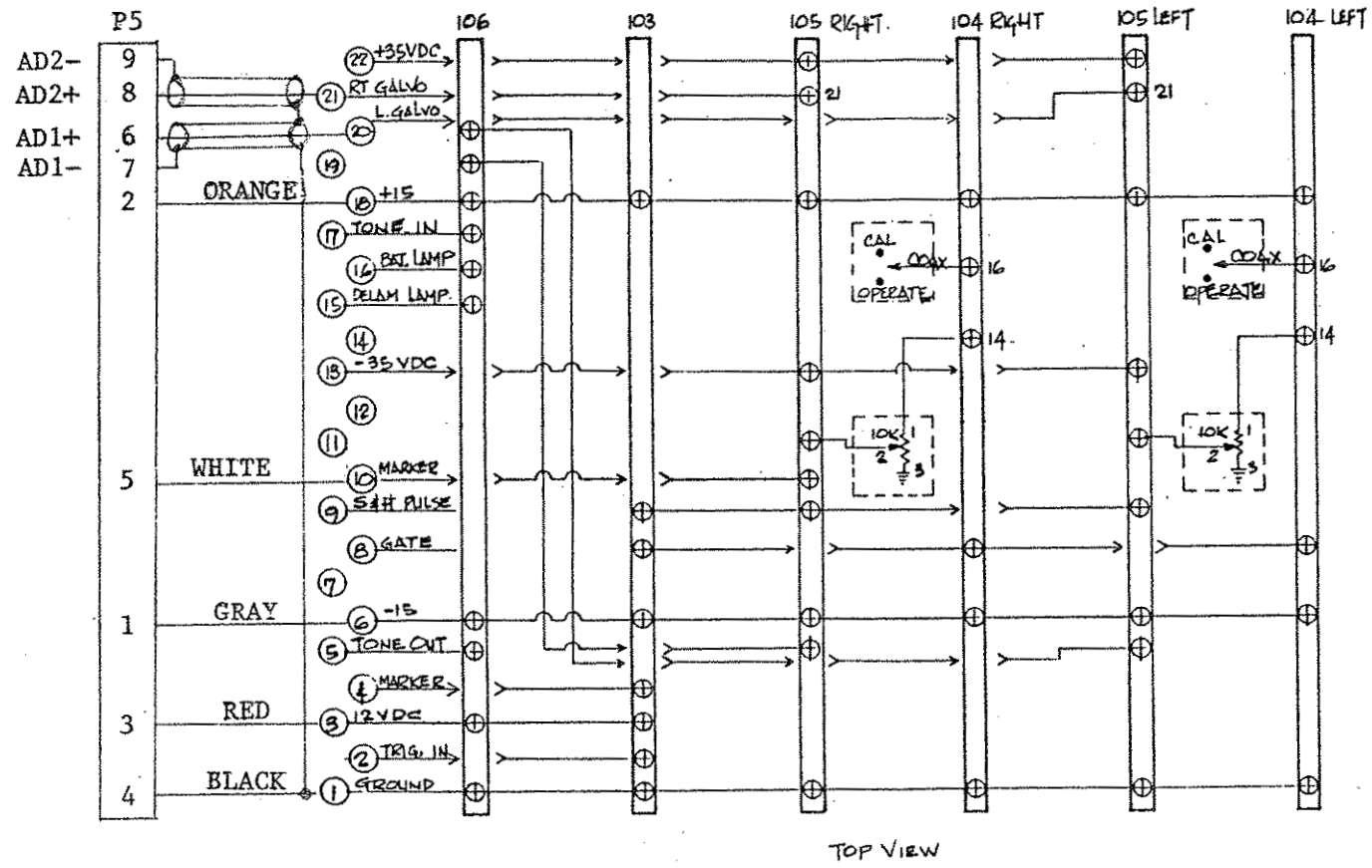

JAN 14 1983

NEXT ASSY	REQD	MATERIAL	TOLERANCES	RADIATION ENG. & MFG. CO. FORT WORTH, TEXAS
			FRACTIONS ± .015 .XX ± .01 .XXX ± .00	TITLE: DIAGRAM FOR P.C. BOARDS — DELAMTEC
		FIXTURE:		
		DRAWN BY: J. McCLAIN	DATE: 1-14-76	SCALE: NONE DWG NO. 15-5-17

Fig. 18

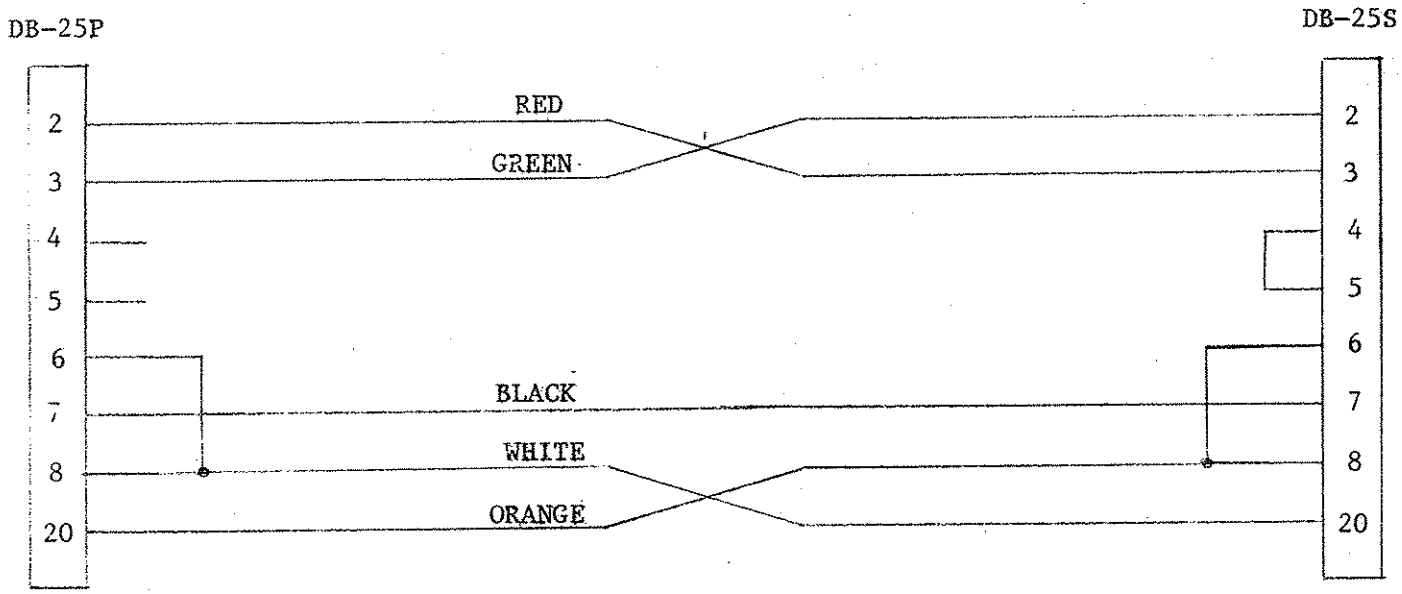

COMPUTER CABLE

D & D DIGITAL SYSTEMS

AMES, IOWA

JUNE 30, 1985

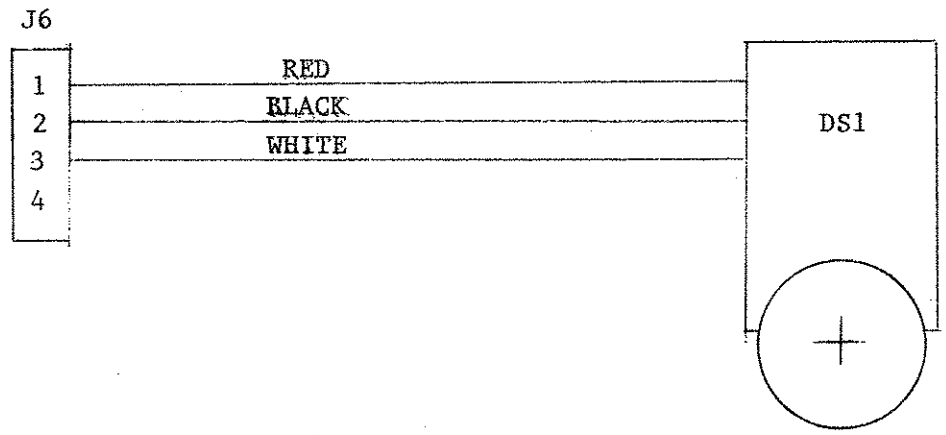

DISTANCE SENSOR

D & D DIGITAL SYSTEMS

AMES, IOWA

JUNE 30, 1985

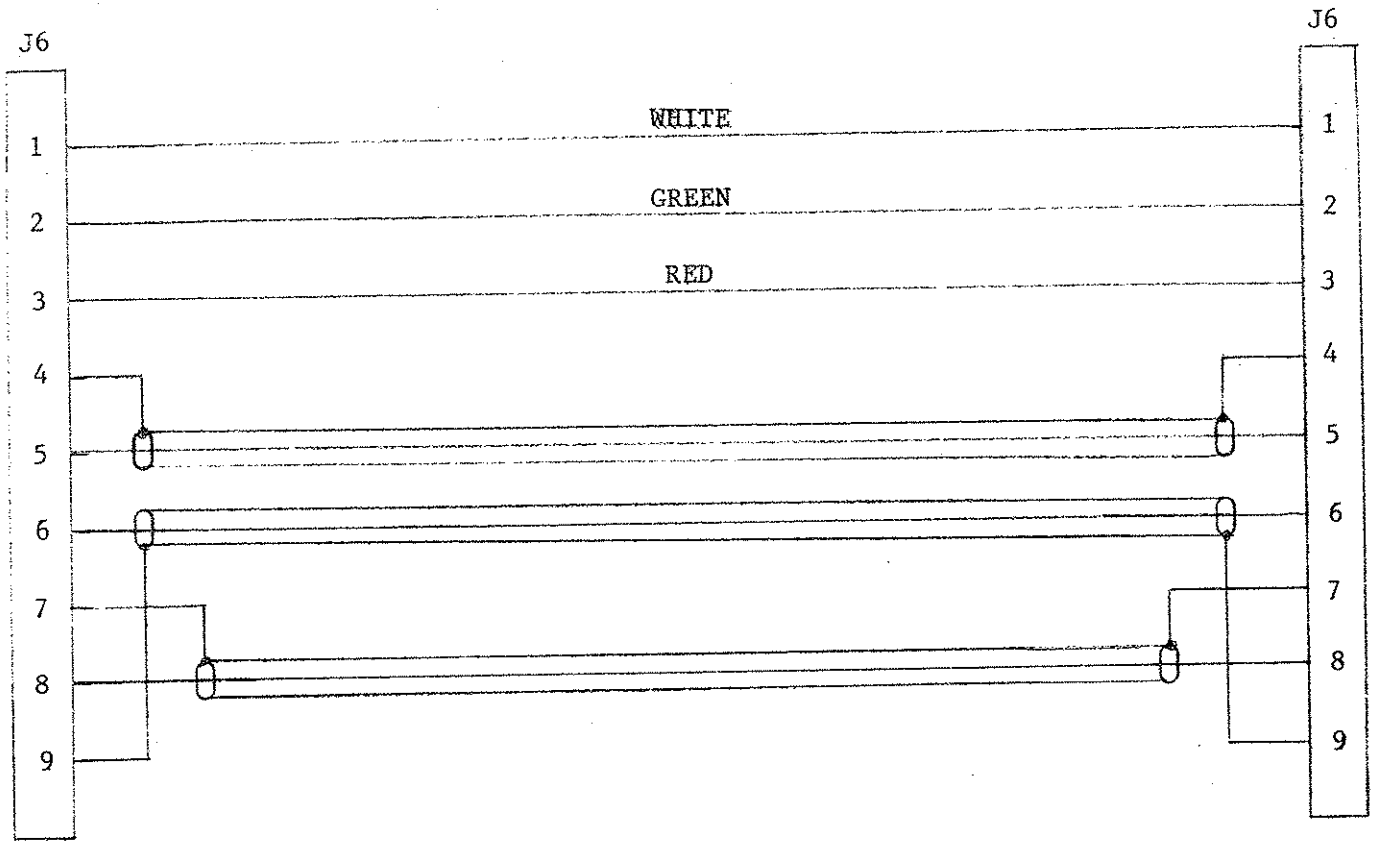

SIGNAL & POWER CABLE

D & D DIGITAL SYSTEMS

AMES, IOWA

JUNE 30, 1985

RED LION CONTROLS
Willow Springs Circle, RD 5, York, Pa. 17402 • (717) 767-6511 • TWX: 510 657 4214 RLC YRK

BULLETIN NO. LSC-001
REVISED 12/12/83

MODEL LSC MEASURING WHEEL LENGTH SENSOR

AN ECONOMICAL ANSWER TO HIGH SPEED, UNI-DIRECTIONAL LENGTH MEASUREMENT FOR PAPER, TEXTILES, FILM, FOIL, FOAM & METAL STRIP PRODUCTS RUNNING THROUGH REWINDERS, PRINTING PRESSES, SLITTERS, SPOOLERS, SHEETERS & OTHER WEB, STRIP OR RIBBON HANDLING APPLICATIONS.

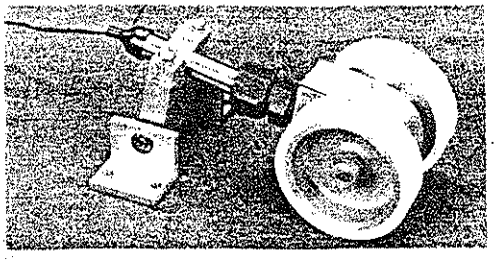

- *CURRENT SINK OUTPUT*
- *AVAILABLE WITH:*
  - ONE OR TWO WHEELS
  - ROUND, FLAT & KNURLED TREAD
  - ENGLISH & METRIC UNITS
- *FOR MEASURING*
  - INCHES, FEET, YARDS
  - CENTIMETERS, METERS
  - FT/MIN, YDS/MIN, MTRS/MIN

Model LSC Length Sensors are designed for accurate reliable operation at high speeds. A slotted, shaft-mounted disc in the cast aluminum housing is scanned by an L.E.D. and photo sensor. The resulting signal is amplified, shaped, and appears as a current-sinking output pulse, compatible with most RLC Counters, Motion Monitors and controls. The unit will operate in either direction of rotation provided the direction does not change. In applications where reversing occurs, the up/down counter direction must be controlled by an external switch contact to correspond to the direction of motion. (As an alternative an RPGB with quadrature output can be outfitted as a length sensor, see following page)

DIMENSIONS & MOUNTING

INCHES (MM)

NOTE: Weight of LSC provides sufficient traction for accurate operation when mounted as shown, with arm angle from horizonal not exceeding +/-30°, and with hinge clamp toward the far extreme of the extension arm.

CAUTION: Downward tension on signal cable can cause LSC wheel(s) to lift. Make sure cable is clamped to machine frame near LSC and allow slack.

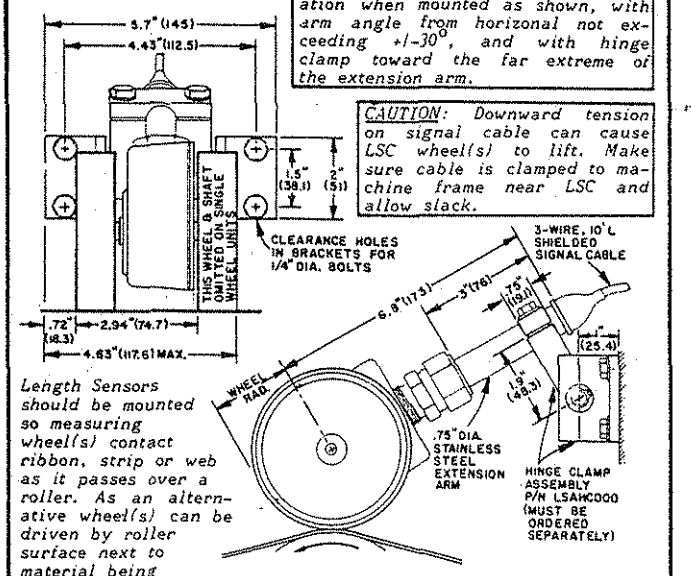

Length Sensors should be mounted so measuring wheel(s) contact ribbon, strip or web as it passes over a roller. As an alternative wheel(s) can be driven by roller surface next to material being measured.

EQUIVALENT CIRCUIT, CONNECTIONS & WAVEFORMS

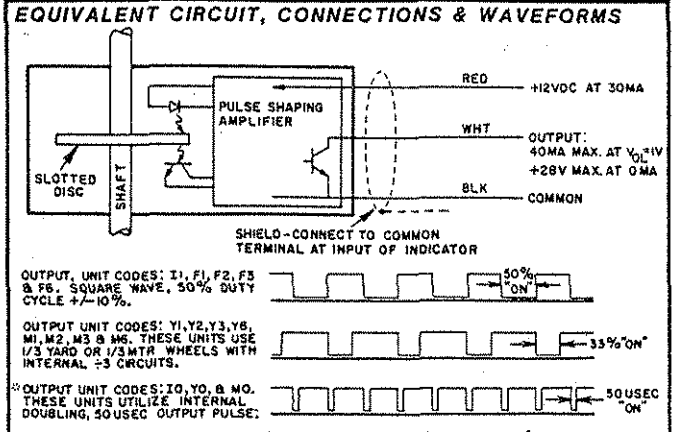

* *Check counter or indicator using this output for compatibility. Cannot be frequency doubled externally.*

Unlike mechanical measuring wheels the LSC has no internal cam switches or dividing gears to wear or create drag. This means lighter wheel pressures since the only resistance the wheel encounters is due to very low bearing friction. Low wheel pressures in turn, means less wear on the wheel tread and less danger of marking the product.

Other Specifications include:

OUTPUT: NPN Open-Collector, current-limited at 40ma 28 VDC maximum.

MAX SHAFT SPEED: 3600 RPM (See wheel information, following page for wheel speed restrictions)

CONSTRUCTION: Cast Aluminum housing, Stainless Steel Tube extension. Oil impregnated sintered bronze bearings, lifetime lubricated. Shielded, 3-wire, signal cable, 10' long. Operating Temperature range 0° to 60°C, weight 1.8 lbs.

TO ORDER: ASSEMBLE COMPLETE PART NO. AS FOLLOWS:

PART NO. - **LSC** __ - __ - __ /A

NO. OF WHEELS
S for Single
D for Dual

UNITS CODE

WHEEL CODES
(See description of wheels & codes next page)
- **OQ** - Less Wheels
- **QR** - Round Neoprene
- **OF** - Flat Tread Polyurethane
- **OK** - Flat Tread Knurled

DESIRED UNITS OF MEASURE	OUTPUT PULSE RATE (PULSES/UNIT)	INSERT 2-DIGIT CODE
INCHES	1/INCH	I1
INCHES IN 1/10THS	10/INCH	I0**
FEET	1/FOOT	F1
FEET IN 1/10THS	10/FOOT	F2
FEET IN 1/100THS	100/FOOT	F3
YARDS	1/YARD	Y1
YARDS IN 1/10THS	10/YARD	Y2
YARDS IN 1/100THS	100/YARD	Y3
METERS	1/METER	M1
METERS IN 1/10THS	10/METER	M2
METERS IN 1/100THS (CM)	100/METER	M3
*FEET/MIN	60/FOOT	F6
*YARDS/MIN	60/YARD	Y6
*YARDS/MIN IN 1/10THS	600/YARD	Y0**
*METERS/MIN	60/METER	M6
*METERS/MIN IN 1/10THS	600/METER	M0**

* *Primarily used for Tachometers & Motion Monitors*

** *Output from I0, Y0 & M0 units code are 50usec pulses (See waveforms at left). Check compatibility of instrument, control, or counter for use with this waveform. Cannot be frequency doubled externally.*

ABOUT ACCURACY IN LENGTH SENSOR APPLICATIONS

USING THE MODEL RMX RATE MULTIPLIER FOR CORRECTION, UNITS CONVERSION & WHEEL WEAR COMPENSATION

Length Sensor wheels have a nominal accuracy of 0.1% which means that under ideal conditions the measurement should be accurate to within 1 part in 1000. Ideal conditions are realized when measuring hard, thin and strong materials such as metal strip, foil or hard paper. However, materials that are thick, soft, spongy or elastic can present problems in obtaining true readings directly, since the surface geometry may not be predictable.

The great majority of these situations can be accommodated by feeding the output from the Length Sensor to a Model RMX Rate Multiplier prior to counting or speed measurement. The Rate Multiplier applies a presettable correction multiplier to the pulse train by dropping or adding pulses as required to obtain a corrected measurement. The presettable multiplier is entered in via thumbwheel switches to an accuracy of four decimal places.

In addition to correcting for elastic and compliance errors, the Rate Multiplier can also be used in applications where English/Metric Conversions must be made and for compensating for wheel wear. (For more information see data sheet on the Model RMX Rate Multiplier in Accessories section of the Catalog)

LENGTH SENSOR CONVERSION BRACKET (P/N LSCB-1000)

ADAPTS RPGB ROTARY PULSE GENERATOR TO LENGTH MEASUREMENT

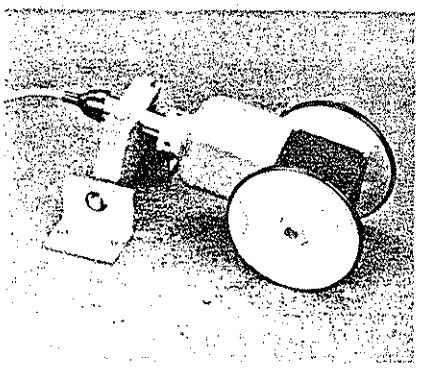

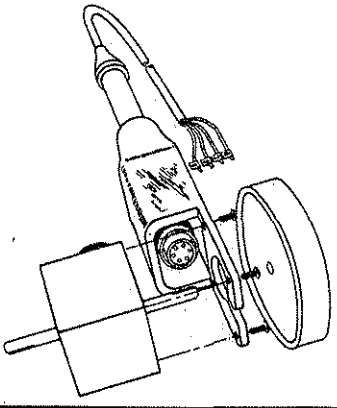

- **FOR BI-DIRECTIONAL MOTION APPLICATIONS REQUIRING QUADRATURE**
- **FOR FINE RESOLUTION, HIGH-PULSE-RATE APPLICATIONS**

This conversion bracket allows the customer to assemble a custom length sensor by purchasing the following items separately.

1. Length Sensor Conversion Bracket (P/N LSCB-1000)
2. RPGB with appropriate PPR and Single Channel or Quadrature Output (See RPGB data sheet, Section D of the Catalog)
3. One or two measuring wheels (Listed below)
4. Hinge Clamp Assembly (Listed below)

The tubular arm length of this bracket, related to the wheel axis center-line of the RPGB is 6.8" similar to the LSC (see previous page). The 10' long, 4-wire, shielded cable (included with conversion bracket) has the same color coding as described for the RPGB cable P/N CCA-RPG-01 in the RPGB data sheet. Screws for mounting the conversion bracket to the RPGB are included. To order see table below.

SEPARATE LENGTH MEASURING WHEELS

WHEEL CODE OR

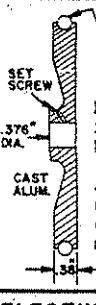

Round Section Replaceable Tire .210" Section Dia. Black Neoprene

FOR USE ON: Metal, paper, foil, film and hard plastics. Line contact on material being measured, convenient when available measuring track is narrow or for measuring on end of roller beside passing material.

Max. Speed: 3000 RPM

WHEEL CODE OF

White, Smooth Polyurethane Tread

FOR USE ON: Soft, smooth materials such as soft paper, matting, cardboard, fine weave textiles. Broad wheel tread minimizes contact pressure and white polyurethane tread minimizes marking.

Max. Speed:
Standard wheels - 600 RPM
Balance to 3000 RPM
Available on special order.

WHEEL CODE OK

Diamond Knurled Aluminum Tread

FOR USE ON: Rubber, coarse weave fabrics, rough wood surfaces, foam, insulation.

MAX. SPEED:
Standard wheel - 600 RPM
Balance to 3000 RPM
Available on special order.

SELECTING APPROPRIATE WHEEL SIZE & PPR (Pulses Per Rev.) OF ROTARY PULSE GENERATOR

When the desired output of an RPGB and wheel combination is either in feet or inch units, selection of the proper combination is relatively straight forward. For example, with a 1-foot wheel circumference a 1 PPR Rotary Pulse Generator will deliver 1 pulse/ft, 12 PPR would deliver 12 pulses/ft (or 1 pulse/inch); 100 PPR would yield 100 pulses/ft; and 120 PPR would permit measuring to 1/10th of an inch (1/120th of a foot).

Measuring in yards or meters however is a bit more involved since a 1 yard or 1 meter circumference wheel would be prohibitively large. Instead, 4/10 yard and 4/10 meter wheels can be used in conjunction with RPGB's in either of two ways. First, RPGB's with PPR's of 1, 10 and 100 can be used with a Model BDMD (Bi-Directional Motion Decoder, See Accessories Section of catalog). The BDMD can quadruple the quadrature signal input and deliver 4, 40 or 400 PPR respectively when used with these RPGB's, allowing measurement of yards or meters in increments of 1/10th, 1/100th or 1/1000th. The second approach would be to use an RPGB with 4, 40 or 400 PPR (available on special order) to generate the desired measuring increments directly. With either of these approaches, the largest measuring increment available is 1/10th of a meter or yard, however this is rarely a handicap when 6-digit counting capacity is available. (Model LSC's described on the previous page, are available in pulse rates of 1 pulse/yard and 1 pulse/meter. This is done by using a 1/3 yard or 1/3 meter wheel with a PPR of 1 internally divided by 3. This capability is not available with Model RPGB Rotary Pulse Generators)

ORDERING INFORMATION

WHEELS & REPLACEMENT TIRES FOR CODE - OR WHEELS

WHEEL CODE	CIRCUMFERENCE	PART NO.
OB	1 foot (1/3 yd)	WF-1000-OR/A
	1/3 meter	WM-0333-OR/A
	4/10ths yard	WY-0400-OR/A
	4/10ths meter	WM-0400-OR/A
OE	1 foot (1/3 yd)	WF-1000-OF/A
	1/3 meter	WM-0333-OF/A
	4/10ths yard	WY-0400-OF/A
	4/10ths meter	WM-0400-OF/A

WHEEL CODE	CIRCUMFERENCE	PART NO.
OK	1 foot (1/3 yd)	WF-1000-OK/A
	1/3 meter	WM-0333-OK/A
	4/10ths yard	WY-0400-OK/A
	4/10ths meter	WM-0400-OK/A
REPLACEMENT TIRES FOR OR WHEELS	1 foot (1/3 yd)	TOR-F-1000/A
	1/3 meter	TOR-M-0333/A
	4/10ths yard	TOR-Y-0400/A
	4/10ths meter	TOR-M-0400/A

ACCESSORIES

DESCRIPTION	PART NO.
LENGTH SENSOR CONVERSION BRACKET FOR RPGB	LSCB-1000/A
HINGE CLAMP ASSEMBLY FOR MODEL LSC & CONVERSION BRACKET (above)	LSA-HCO-00/A

RED LION CONTROLS

Willow Springs Circle, RD 5, York, Pa. 17402
(717) 767-6511 TWX: 510 657 4214 RLC YRK

PARTS LIST

6502 A/D BOARD

COMPONENT NUMBER OR QUANTITY	DESCRIPTION
C1	0.047 ufd. Capacitor
C2	470 pf. Mica Capacitor
C3,C4,C5,C6,C7,C8,C9,C10,C11	0.1 ufd. Ceramic Capacitor
C12	0.01 ufd. Ceramic Capacitor
C13	1 ufd. 50 v. Electrolytic Capacitor
C14,C15	150 pf. Mica Capacitor
J1	DB-25S Rt. Angle P.C. Mount Connector
P2	34 Pin P.C. Mount Header
P3	6 Pin Amp Mate-N-Lock w/pins
R1,R2	2.2K Ohm 1/4 Watt 5% Resistor
R3	22K Ohm 1/4 Watt 5% Resistor
R4,R5	1M Ohm 1/4 Watt 5% Resistor
R6,R7,R8,R9,R10,R11,R12,R13,R14,R15	10K Ohm 1/4 Watt 5% Resistor
R16,R17	1K Ohm 1/4 Watt 1% Resistor
U1	65C02A Microprocessor I.C.
U2	6116-15 Ram I.C.
U3	2716 Eprom I.C.
U4,U5	68C21A Peripheral Interface Adaptor
U6	6551A Communications Interface I.C.
U7	SN74LS138N TTL I.C.
U8	SN7404 TTL I.C.
U9	NE555P Timer I.C.
U10,U11	ADC0804LCN A/D Converter
U12	ua1488 RS-232c Driver I.C.
U13	ua1489 RS-232c Receiver I.C.
XTAL1	1.8432 Mhz. Crystal

Interface Cable:

2	34 Contact Ribbon Socket Connectors
3 1/2"	28 AWG 34 Conductor Ribbon Cable

Tape Recorder Cable:

2	DB-25P Ribbon Connectors
2'	28 AWG 25 Conductor Ribbon Cable

Hardware:

4	4-40 X 3/8" Hex Posts
8	4-40 X 3/8" Machine Screws
1	24 Pin I.C. Socket
1/2'	22 AWG Red Hookup Wire
1/2'	22 AWG Yellow Hookup Wire
1/2'	22 AWG Blue Hookup Wire
1/2'	22 AWG White Hookup Wire

INTERFACE & POWER SUPPLY BOARD

COMPONENT NUMBER OR QUANTITY	DESCRIPTION
C1	22 ufd. 25 v. Tantalum Capacitor
C2	100 ufd. 25 v. Electrolytic Capacitor
J3,J4	6 Pin Amp Mate-N-Lock Connector w/sockets
K1	Reed Relay-Radio Shack 275-232
L1	12v. Lamp Holder-Radio Shack 272-324
P2	34 Pin P.C. Mount Header
P4	6 Pin Amp Mate-N-Lock Connector w/pins
P5	9 Pin Receptacle-Amp CPC w/pins
P6	4 Pin Receptacle-Amp CPC w/pins
R1,R4	1K Ohm 1/4 Watt 5% Resistor
R2	9.1K Ohm 1/4 Watt 5% Resistor
R3	820K Ohm 1/4 Watt 5% Resistor
R5	5 Ohm 5 Watt 1% Resistor
U1	ua78H05 Voltage Regulator
U2	LM311N Comparator I.C.
U3	SN7406N TTL I.C.
	Hardware:
1	#1487 Lamp
2	4-40 Standoff Terminals
4	4-40 X 3/8" Hex Posts
1	TO-3 Spacesaver Heat Sink HS102
20	4-40 X 3/8" Machine Screws
10	4-40 Hex Nuts
10	4-40 Lockwashers
2'	22 AWG Black Hookup Wire
3'	22 AWG Red Hookup Wire
1/2'	22 AWG Orange Hookup Wire
1 1/2'	22 AWG Yellow Hookup Wire
2'	22 AWG Green Hookup Wire
1'	22 AWG Blue Hookup Wire
1'	22 AWG Gray Hookup Wire
2'	22 AWG White Hookup Wire

DELAMTECT MODIFICATION

COMPONENT NUMBER OR QUANTITY	DESCRIPTION
P5	9 Pin Receptacle-Amp CPC w/pins
	Hardware:
4	4-40 X 3/8" Machine Screws
4	4-40 Lockwashers
4	4-40 Hex Nuts
2'	Single Conductor Shielded Wire
1'	22 AWG Orange Hookup Wire
1'	22 AWG White Hookup Wire
1'	22 AWG Gray Hookup Wire
1'	22 AWG Red Hookup Wire
1'	22 AWG Black Hookup Wire

DISTANCE SENSOR

COMPONENT NUMBER OR QUANTITY	DESCRIPTION
DS1	Distance Measuring Transducer Red Lion LSCD-IO-OF Wheel Sensor Red Lion LSA-HCO-OO Bracket
J6	6 Pin Plug-Amp CPC w/sockets

COMPUTER CABLE

COMPONENT NUMBER OR QUANTITY	DESCRIPTION
1	DB-25P D Connector-Solder Type
1	DB-25S D Connector-Solder Type
2	DB-25 D Connector Hoods
12'	22 AWG 7 Conductor Cable

SIGNAL & POWER CABLE

COMPONENT NUMBER OR QUANTITY	DESCRIPTION
2	6 Pin Plugs-Amp CPC w/sockets
2 1/2'	22 AWG 4 Conductor Cable
7 1/2'	Single Conductor Shielded Wire
2 1/2'	Spiral Cable Wrap

A.3 TECHTRAN RECORDER

COMMAND REFERENCE

FUNCTION	BINARY SWITCH POSITION	MANUAL COMMAND	REMOTE COMMAND (Dip Switch 7 ON)
Start READ	any	READ Pushbutton	(CTRL Q)
Stop READ	any	READ Pushbutton	(CTRL S)
Start WRITE	BINARY	WRITE Pushbutton	N/A
	ONLINE/OFFLINE	WRITE Pushbutton	(CTRL R)
Stop WRITE	BINARY	WRITE Pushbutton	N/A
	ONLINE/OFFLINE	WRITE Pushbutton	(CTRL T)
END OF FILE Marker	BINARY	N/A	(CTRL S)
	ONLINE/OFFLINE	N/A	(CTRL S)
Start FILE SKIP	ONLINE/OFFLINE	N/A	(CTRL O)
Stop FILE SKIP	ONLINE/OFFLINE	READ Pushbutton	(CTRL S)
REWIND	BINARY	REWIND Pushbutton	N/A
	ONLINE/OFFLINE	REWIND Pushbutton	(CTRL Z)
CHARACTER DELETE	ONLINE/OFFLINE	N/A	(CTRL X)

NOTE: The LINE MODE switch affects the READ function as follows:

LINE MODE switch ON - READ line by line
LINE MODE switch OFF - READ file by file

9600PRL INSTALLATION AND OPERATING INSTRUCTIONS

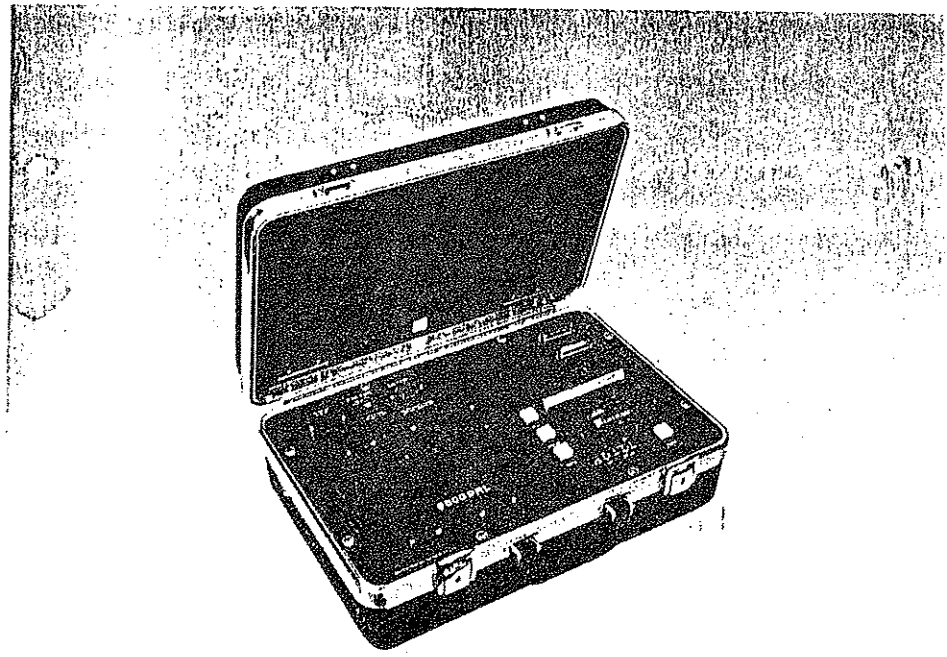

TECHTRAN
INDUSTRIES, INC
200 Commerce Drive • Rochester, N.Y. 14623
Telephone (716) 334-8640 • TWX 510-253-3246

Contents

1 SYSTEM OVERVIEW 1

Introduction. 9600PRL Operation. Control Panel. Cassette Description. Cassette Insertion and Removal. Control Codes. Preventive Maintenance. Manual Organization.

2 INSTALLATION AND SPECIFICATIONS 5

Introduction. Cassette Specifications. Terminal Port Interface. Pin Assignments. Signal Characteristics. General Information. Environmental Specifications. ONLINE Data Flow. Dip Switch Settings. Baud Rate. Transmit/Disable (BS) Character. Full/Half Duplex. Enable/Disable READ Delay. Line Terminator. Remote READ Control. READ Delay Character. Odd/Even Parity. Enable/Disable Parity. Cable Connections.

3 OPERATING INSTRUCTIONS 15

Introduction. Write. Read. Rewind. Character Delete. File Skip.

4 OPTIONAL FEATURES 19

Ready/Busy Output. Start/Stop Input. Online Speed Control.

Illustrations

Figure 1: Local 9600PRL System 2
Figure 2: Remote 9600PRL System 2
Figure 3: Control Panel of the 9600PRL 3
Figure 4: ONLINE Data Flow 7
Figure 5: Dip Switch Panel 8
Figure 6: OFFLINE Mode, Full and Half Duplex 10
Figure 7: ONLINE Mode, Full and Half Duplex 11

1

System Overview

INTRODUCTION

This manual is designed for the user of the 9600PRL. All of the required operations associated with the unit are explained including:

- installation procedures
- cassette usage and care
- preventive maintenance
- operating instructions

This section should be thoroughly read and understood before proceeding to any of the above operations. It contains valuable information about using the 9600PRL.

9600PRL OPERATION

The 9600PRL is a high-speed portable data recorder/program loader designed for storing, transmitting and receiving ASCII-coded data. Among the standard operating features are:

- *WRITE* - recording data at selected speeds
- *READ* - displaying the contents of a cassette
- *FILE SKIP* - providing rapid forward tape advance
- *CHARACTER DELETE* - eliminating undesired characters during data recording

The 9600PRL has the versatility for numerous applications including:

- loading programs into PBX systems and process control devices
- loading diagnostic routines into programmable systems and devices
- digital recording for datalogging systems
- remote testing and troubleshooting

Figures 1 and 2 illustrate typical system configurations of the 9600PRL.

CONTROL PANEL

The control panel of the 9600PRL contains several switches and pushbuttons used to operate the unit (refer to Figure 3). The READ, WRITE, and REWIND pushbuttons are used for manual control of the unit; remote control (if activated) is implemented by control codes received at the MODEM/CPU or TERMINAL ports.

During installation, the dip switches (located beneath the lift-off cover) are set to meet desired interface requirements. AC power requirements can also be selected from the control panel.

The Line Mode and Binary switches provide special operating features. Each operation provided in this manual specifies the correct switch settings and explains various options available.

In addition, two ports are supplied for equipment interface. The MODEM/CPU port can be attached to a modem, acoustic coupler, CPU or intelligent device. The TERMINAL port can be attached to a hardcopy terminal, printer, CRT or electronic device.

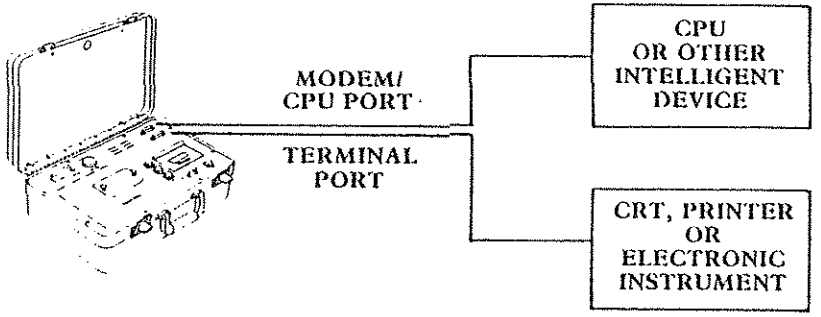

Figure 1: Local 9600PRL System

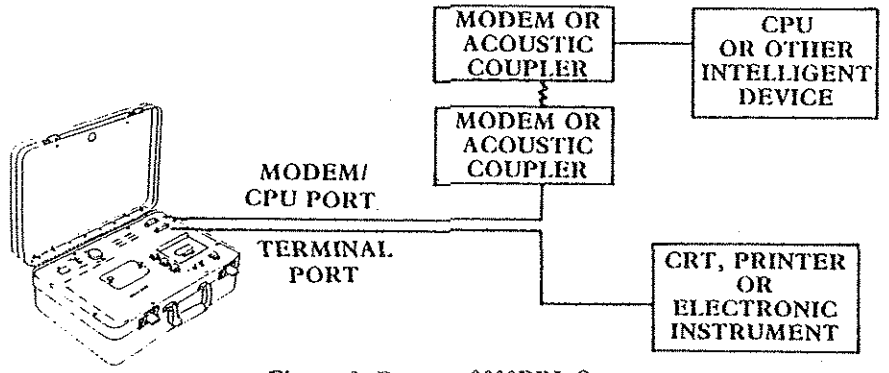

Figure 2: Remote 9600PRL System

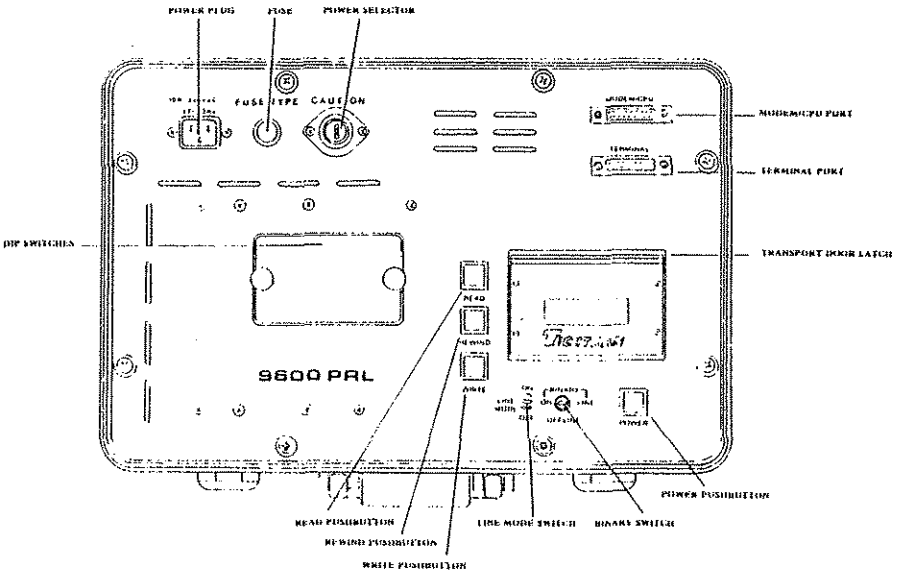

Figure 3: Control Panel of the 9600PRL

CASSETTE DESCRIPTION

Cassettes are a magnetic medium used to store recorded data. *Techtran cassettes (P/N 4300001) or an approved equal should be used with the 9600PRL;* otherwise, damage may occur and the machine warranty may be voided (refer to Section 2).

Data is only recorded on one side of the cassette. Cassettes recorded on the 9600PRL can only be interchanged with cassettes from another 9600PRL or from a Techtran Series 800 Datacassette with the 9600 baud option. Do not expose cassettes to strong magnetic fields or temperatures in excess of 104°F (40°C).

CASSETTE INSERTION AND REMOVAL

1. Turn the unit on by pressing the POWER pushbutton (the pushbutton will illuminate). Lift the transport door latch, allowing the door to swing open.
2. Fully insert the cassette into the tape guides with the label facing forward and the large tape spool on the left. Close the transport door.

To remove a cassette, make sure that no functions are in progress. Lift the transport door latch and remove the cassette.

CONTROL CODES

Several 9600PRL operations are facilitated by using control codes. All control codes in this manual are identified as follows:

(CTRL X)

CTRL represents the CONTROL key on the terminal and X represents a designated character. To use a control code, press the CTRL key and simultaneously press the designated character. All control codes are listed on the back cover.

PREVENTIVE MAINTENANCE

The READ/WRITE tape head of the recorder must be cleaned *daily* using a soft cotton swab dampened in isopropyl alcohol. Neglecting this care may result in abnormal tape wear, transport damage or operational errors.

MANUAL ORGANIZATION

This manual contains three additional sections. Section 2 explains how to install the 9600PRL and provides unit specifications. Section 3 provides operating instructions for the 9600PRL, and Section 4 lists available options. Proceed to Section 2 for installation procedures.

2

Installation and Specifications

INTRODUCTION

The following section contains information about installing the 9600PRL. Once the unit is unpacked, check that the following standard equipment was included:

- 9600PRL
- one cassette
- male to female EIA RS-232C cable
- power cord
- *9600PRL Installation and Operating Instructions*

Installation consists of setting the dip switches, connecting cables and powering on. Before beginning installation, verify that the peripheral equipment in use meets the specifications listed subsequently.

CASSETTE SPECIFICATIONS

- Philips-type
- 300 feet (length)
- 1600 bits per inch (density)

Only Techtran cassettes (P/N 4300001) or an approved equal should be used with 9600PRL. Use of other cassette types may cause equipment damage and could void the machine warranty.

TERMINAL PORT INTERFACE

A device connected to the TERMINAL port must have the following characteristics:

- Full or Half Duplex, asynchronous
- 8-level USASCII coded
- EIA RS-232C/CCITT V.24

If using a Model 33* or similar terminal having a current interface, the terminal must be prepared to operate in the Full Duplex 20 milliampere Neutral mode.

*Model 33 is a trademark of Teletype Corporation.

PIN ASSIGNMENTS

TERMINAL Port		MODEM/CPU Port	
Pin	**Function**	**Pin**	**Function**
1 AA	Protective Ground	1 AA	Protective Ground
2 BA	Transmitted Data (Out)	2 BA	Transmitted Data (In)
3 BB	Received Data (In)	3 BB	Received Data (Out)
4 CA	Request to Send	5 CB	Clear to Send
5 CB	Clear to Send	6 CC	Data Set Ready
7 AB	Signal Ground	7 AB	Signal Ground
8 CF	Data Carrier Detect	8 CF	Data Carrier Detect
16	Ready/Busy Output ①	16	Ready/Busy Output ①
20 CD	Data Terminal Ready	20 CD	Data Terminal Ready
25	Start/Stop Input ②	25	Start/Stop Input ②

TERMINAL Port — 20mA Current Loop

Pin	Function
2	Transmitted Data (In)
3	Received Data (Out)
10	Receive Common
13	Transmit Common

① Optional (Ready = ØV, Busy = + 5V)

② Optional (Start = ØV, Stop = + 5V)

NOTES

- 9600PRL supplies +5V on pins 5, 6 and 8 of the TERMINAL port and pins 4 and 20 of the MODEM/CPU port.
- 9600PRL requires +3V to +25V on pin 4 or 20 of the TERMINAL port to enable READ Delay.
- 9600PRL requires +3V to +25V on pin 5 of the MODEM/CPU port to enable interface.
- MODEM/CPU port is a DB-25P connector; TERMINAL port is a DB-25S connector.
- MODEM/CPU interface is only active when the attached device sends a signal to pin 5 (CB, Clear to Send) and the Binary switch is ONLINE or BINARY. Future reference to this condition: pin 5 at the MODEM/CPU port *enabled.*

GENERAL INFORMATION

- Power: Selected from the control panel (100, 115, 200, 220, 230, and 240VAC, 47-63Hz, 12W)
- Baud Rates: 110, 300, 1200, or 9600
- Characters per cassette: 220,000 (nominal)
- Recording Format: Techtran NRZ Dual-Track

SIGNAL CHARACTERISTICS

- EIA RS-232C/CCITT V.24
- Receive - Mark: -3 to -25 volts
  Space: +3 to +25 volts
- Transmit - Mark: -8 volts with 3K load
  Space: +8 volts with 3K load
- Maximum short circuit current: 500 mA
- Terminating Impedance: 3K to 7K

ENVIRONMENTAL SPECIFICATIONS

- Operating Temperature: 50-104°F (10-40°C)
- Operating Humidity: 20-90% relative humidity, non-condensing

ONLINE DATA FLOW

The 9600PRL is ONLINE when the Binary switch is in BINARY or ONLINE and pin 5 at the MODEM/CPU port is enabled. Figure 4 demonstrates how data travels in the ONLINE mode.

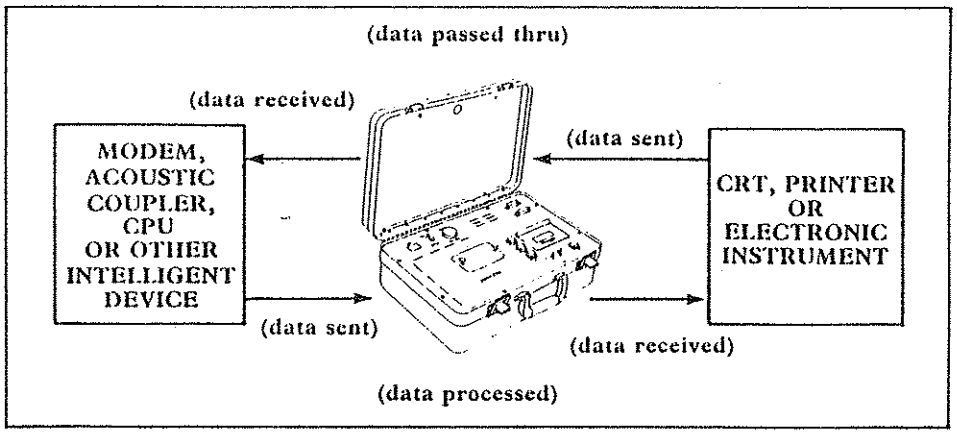

Figure 4: ONLINE Data Flow

DIP SWITCH SETTINGS

The dip switches are housed beneath a lift-off cover as indicated in Figure 3. Figure 5 illustrates the dip switch panel; follow the instructions provided to set these switches. Use a pencil tip to manipulate the switches.

NOTE: Each switch sets the interface requirements for *all* devices attached to the unit. Data to be recorded must come to the MODEM/CPU port under the following two conditions:

- Pin 5 at the MODEM/CPU port is enabled
- Binary switch set to ONLINE or BINARY

Input must come from the TERMINAL port if pin 5 at the MODEM/CPU port is *disabled* or the Binary switch is OFFLINE.

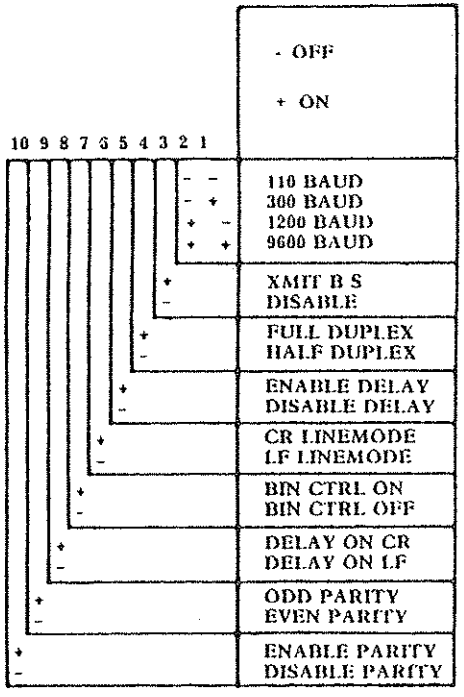

Figure 5: Dip Switch Panel

Baud Rate

Determine the appropriate baud (transmission) rate of the attached devices and set switches 1 and 2 accordingly. Refer to the upper right of the dip switch panel to determine the correct switch positions (ON or OFF). Characters with eleven bits (two stop bits) will be transmitted at the 110 speed; ten bit characters (one stop bit) will be transmitted at all other speeds. If using the ONLINE SPEED CONTROL option, refer to Section 4 before setting these switches.

Transmit/Disable (BS) Character

Switch 3 affects the CHARACTER DELETE function (refer to Section 3). When removing unwanted characters from data during this function, you may set this switch to cause the following results at the TERMINAL and MODEM/CPU ports:

- If the switch is set to ON(+), then once a character is removed from data, a (BS) code is sent and the cursor of the attached terminal device will move back to the position of the removed character. The next character received will be placed in this position.

- If the switch is set to OFF(-), then once a character is removed from data, no (BS) code is sent and the cursor prints the next character received in the following position.

Full/Half Duplex

The effect of switch 4 varies according to the position of the Binary switch on the control panel (refer to Figures 6 and 7).

- When the Binary switch is OFFLINE or pin 5 at the MODEM/CPU port is *disabled* with the Binary switch ONLINE, data received at the TERMINAL port is affected as follows:

  Full Duplex: All data received is echoed back to the source. In other words, if the device sends a character, it will be processed by the 9600PRL and also sent back to the originating device as verification.

  Half Duplex: No data is echoed back to the source.

When the Binary switch is ONLINE and pin 5 at the MODEM/CPU port is *enabled,* no data is echoed back from the 9600PRL. Any full duplex device connected to the TERMINAL port is expected to receive data as a result of an echoback from a device attached to the MODEM/CPU port.

- When the Binary switch is in ONLINE or BINARY and pin 5 at the MODEM/CPU port is *enabled,* the READ function is affected as follows (refer to Section 3):

  Full Duplex: Data is sent to the MODEM/CPU port only. Any device connected to the TERMINAL port is expected to receive data as a result of an echoback received at the MODEM/CPU port from the attached device.

  Half Duplex: Data is sent to both ports; therefore, a device connected to the TERMINAL port will receive the same data as a device connected to the MODEM/CPU port.

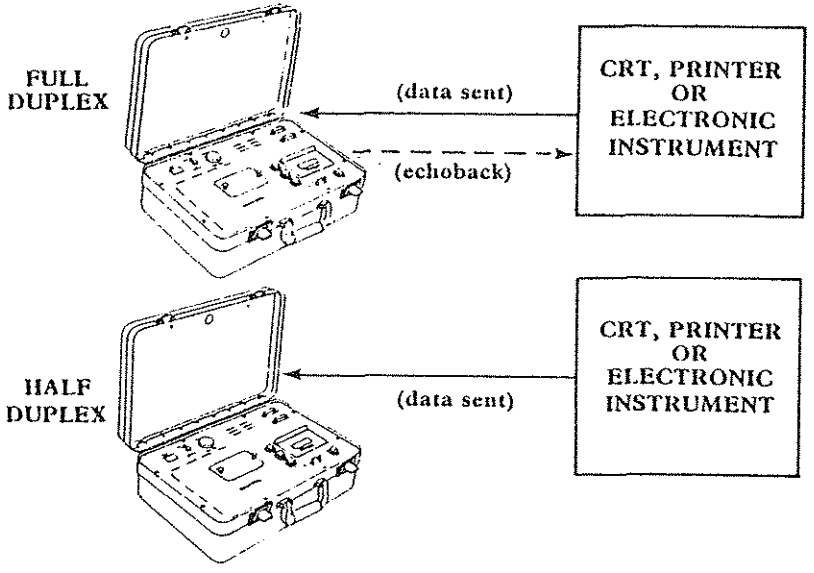

Figure 6: OFFLINE Mode, Full and Half Duplex

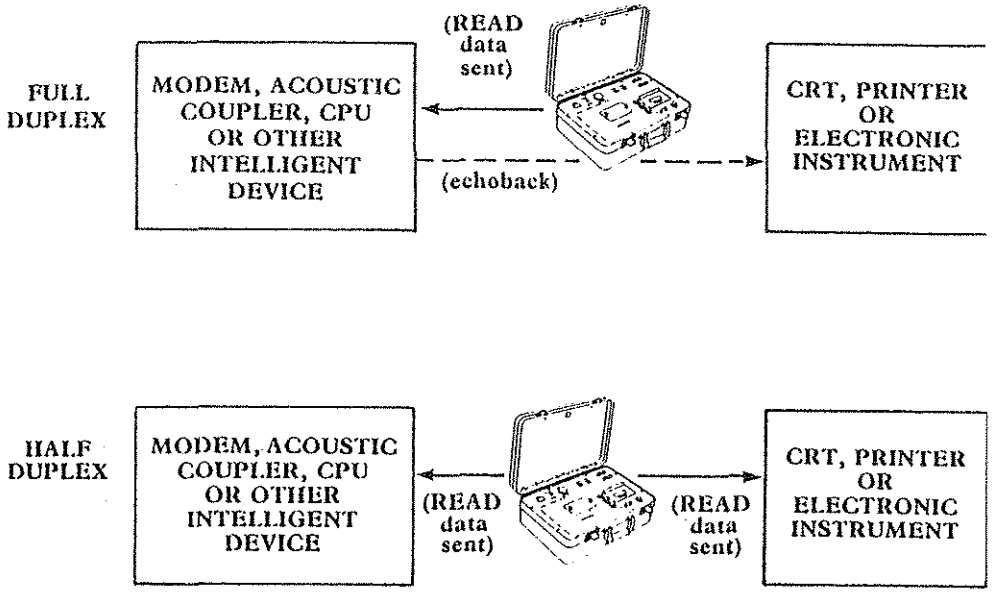

Figure 7: ONLINE Mode, Full and Half Duplex

Enable/Disable READ Delay

Switch 5 determines if an automatic 300 millisecond delay will occur during the READ function after each line of data sent from the tape. Set the switch to the ON(+) position to enable the READ delay. The READ delay is functional only when an active device is attached to the TERMINAL port and +3V to +25V is present at pin 4 or 20 of the TERMINAL port, but it will affect the READ function at both ports. If the switch is set to the OFF(-) position, no READ delay will occur.

Line Terminator

When the Line Mode switch on the control panel is ON, either a Carriage Return (CR) or Line Feed (LF) character (as set by this switch) is recognized as the line terminator. Determine which character ends lines of data for your application and set switch 6 accordingly.

Remote READ Control

Switch 7 determines if remote control with the READ function is permitted when the Binary switch is in BINARY. Using remote control, the READ function can be controlled by sending control codes Q and S to the MODEM/CPU and TERMINAL ports. If remote control is desired, set this switch to the ON(+) position. If remote control is not required, set this switch to the OFF(-) position and only manual control panel commands will be recognized (READ, WRITE and REWIND pushbuttons).

READ Delay Character

Set switch 8 only if dip switch 5 is set to the ON(+) position. The READ delay selected by dip switch 5 (Enable/Disable READ Delay) is activated by either a (CR) or (LF) character (as set by this dip switch). Specify the character to cause the delay by setting this switch.

Odd/Even Parity

Set switch 9 only if odd or even parity is required for the attached devices. This switch identifies the odd or even parity requirements of the attached devices. Specify if the devices in use have odd or even parity by setting this switch accordingly.

Enable/Disable Parity

Switch 10 further specifies the parity requirements of the attached devices. If this switch is set to the ON(+) position, odd or even parity will be sent as specified by dip switch 9. If this switch is set to the OFF(-) position, data will be recorded as it was received (8-bit bytes) and sent as it was recorded.

CABLE CONNECTIONS

The 9600PRL can be connected to peripheral devices by either direct or remote means as follows:

1. Connect the male to female cable supplied from the MODEM/CPU port on the unit to one of the following devices:

   - CPU or Intelligent Device (direct connection)
   - Modem or Acoustic Coupler (remote connection)

   Refer to Figures 1 and 2. *Pin 5 must be enabled* by the attached device. Local cable distances should not exceed 50 feet, according to EIA RS-232C specification.

2. Connect a male to male EIA RS-232C cable (not supplied) from the TERMINAL port on the unit to the terminal, printer, or electronic device in use. Be sure to activate the Remote/Online mode on a terminal or printer.

3. Attach the power cord supplied from the power plug on the unit to a local AC power source. Select the appropriate local AC power requirements on the control panel *before* turning the unit on. Press the POWER pushbutton on the control panel to turn the unit on (pushbutton will illuminate). Turn on peripheral devices.

3

Operating Instructions

INTRODUCTION

The 9600PRL can be operated manually from the control panel using the READ, WRITE, and REWIND pushbuttons. If remote READ control is selected (dip switch 7 ON), the TERMINAL and MODEM/CPU ports will recognize control codes Q and S when the Binary switch is in BINARY.

Before beginning the READ or WRITE operations, refer to the guidelines listed below.

IF SENDING DATA TO THE TERMINAL PORT, ***ONE*** OF THE FOLLOWING CONDITIONS MUST BE MET (OFFLINE MODE):

1. Binary switch set to OFFLINE (pin 5 at the MODEM/CPU port enabled or disabled)
2. Pin 5 at the MODEM/CPU port disabled (Binary switch set to ONLINE or OFFLINE)
3. No device connected to the MODEM/CPU port

IF SENDING DATA TO THE MODEM/CPU PORT, ***BOTH*** OF THE FOLLOWING CONDITIONS MUST BE MET (ONLINE MODE):

1. Binary switch set to ONLINE or BINARY
2. Pin 5 at the MODEM/CPU port enabled

Use the back cover for future command reference.

WRITE

The WRITE function permits data recording onto a cassette. The 9600PRL records data in 8-bit bytes and treats control codes as it does any other character when the Binary switch is in BINARY (code transparent). Once all of the information has been entered, it must be stored in a manner that is easy to retrieve later. All recorded information is stored in *files* that you terminate when data recording is ended.

Before beginning to WRITE:

- adhere to the guidelines listed previously.
- be sure that the cassette in use is not write-protected.
  The plastic tab on the top left of the cassette must be in place.

To record data:

1. Insert the cassette and close the transport door.

2. Enter (CTRL R) or press the WRITE pushbutton. The WRITE pushbutton will illuminate. Note: (CTRL R) cannot be used if the Binary switch is in BINARY.

3. Enter the information to be recorded.

4. Enter (CTRL S) to identify the end of a file.

To terminate the WRITE function, enter (CTRL T) or press the WRITE pushbutton. The WRITE function *must* be terminated to insure that all information is recorded on the cassette.

READ

The READ function permits viewing of the cassette contents. There are three ways to READ cassettes (notice the required switch settings for each method):

- READ cassette information line by line (Line Mode switch set to ON, Binary switch set to ONLINE or OFFLINE)

- READ cassette information file by file (Line Mode switch set to off, Binary switch set to ONLINE or OFFLINE

- READ entire cassette without stops (Binary switch set to BINARY)

Before you begin to READ, adhere to the guidelines listed previously.

To READ a cassette:

1. Insert the cassette and close the transport door.

2. Enter (CTRL Q) or press the READ pushbutton. The READ pushbutton will illuminate. The information will be displayed as previously indicated by the switch settings.

To end the READ function, enter (CTRL S) or press the READ pushbutton. The READ function will automatically terminate if:

- the end of all data is reached
- a blank cassette is inserted
- the end of the cassette tape is reached
- the unit encounters a file terminator, (CTRL S), recorded on the cassette (unless the Binary switch is in BINARY)
- the unit encounters a line terminator, (CR) or (LF), recorded on the cassette (if the Line Mode switch is ON)

REWIND

You can rewind the cassette tape provided no other function is in progress. The tape rewinds completely and cannot be stopped once begun. The transport door should never be opened during REWIND.

To REWIND the tape, enter (CTRL Z) or press the REWIND pushbutton. The REWIND pushbutton will illuminate and the tape will fully rewind. Always rewind the tape before removal. If the tape does not respond to this command, follow these steps:

1. Enter (CTRL Q) or press the READ pushbutton. Allow the tape to advance for a few seconds.

2. Enter (CTRL S) or press the READ pushbutton.

3. Enter (CTRL Z) or press the REWIND pushbutton.

CHARACTER DELETE

This function removes unwanted characters during data recording. When the unit receives the CHARACTER DELETE command (CTRL X), the last character sent to the unit is erased. The (CTRL X) command may be used consecutively to remove up to the last 64 characters. This function is inoperative when the Binary switch is in BINARY.

FILE SKIP

The FILE SKIP function permits rapid forward tape advance on the cassette without data display. Cassette data is advanced file by file. This function is inoperative when the Binary switch is in BINARY. Follow these steps to implement the FILE SKIP:

1. Insert the cassette and close the transport door.

2. Enter (CTRL O). The READ pushbutton will illuminate and the tape will advance to the next stop. Continue the FILE SKIP as required.

The FILE SKIP function does not need to be terminated once a stop point is reached if you wish to begin another operation. This function automatically stops when:

- the end of the cassette tape is reached
- a blank cassette is inserted
- the unit encounters a file terminator, (CTRL S), recorded on the cassette

To stop a FILE SKIP in progress, enter (CTRL S) or press the READ pushbutton.

4

Optional Features

READY/BUSY OUTPUT

This option indicates when the cassette tape is in motion by registering the following voltages on pin 16 of either port:

- Tape Stopped: ØV
- Tape in Motion: +5V +/- 10% (maximum 10mA)

START/STOP INPUT

This option can be used once the READ function has been initiated. When READ is in progress, the following voltages sent to pin 25 of the active port will interrupt and resume the READ function:

- Start Read: ØV
- Stop Read: +5V +/- 10% (minimum 20mA)

This option cannot be used to begin or end the READ function.

ONLINE SPEED CONTROL

This option automatically selects a preset alternate baud rate for both ports when the Binary switch is ONLINE and pin 5 at the MODEM/CPU port is *enabled*. This eliminates the need for altering dip switch settings 1 and 2 if the baud rate differs during ONLINE and OFFLINE functions.

When using this option, set dip switches 1 and 2 to reflect the baud rate of the TERMINAL port (OFFLINE operations); the baud rate of the MODEM/CPU port will be factory set and is selected automatically with this option whenever ONLINE operations are activated.

LIMITED WARRANTY

Techtran Industries, Inc. warrants that this product is free from defects in material and workmanship for a period of ninety (90) days from the date of shipment. Techtran's obligation under this limited warranty shall be to replace or repair, at its option, at its designated site, any part or parts thereof (except expendable parts thereof, defective cassettes and damage caused in shipment) that within the warranty period are returned to Techtran in the original shipping package under a Return Authorization (RA) number issued by Techtran and that are found by Techtran to be defective in proper usage. Techtran reserves the right to refuse to accept delivery of any shipment containing any shipping cartons which do not have the RA number displayed on the outside. Buyer shall ship freight prepaid to Techtran's designated site. If Techtran determines that the product is not defective within the terms of this limited warranty, Buyer shall pay Techtran the cost of repairs at the then prevailing Techtran repair rates.

The foregoing limited warranty is in lieu of all warranties, either expressed or implied, including without limitation any implied warranty of merchantability or fitness for a particular purpose, and of any other obligation on the part of Techtran. Techtran shall not be liable for any injury, loss or damage, direct or consequential to persons or property caused either directly or indirectly by the use or inability to use the equipment and/or this or related documents. Such limitations in liability shall remain in full force and effect even when Techtran may have been advised of the possibility of such injuries, losses or damages.

Any provision herein to the contrary notwithstanding, in no event shall Techtran be liable for indirect, incidental or consequential damages and in no event shall the liability to Techtran arising in connection with any product (whether such liability arises from a claim based on contract, warranty, tort or otherwise) exceed the actual amount paid to Techtran for the *defective product.*

Before purchasing or using the product, Buyer shall determine the suitability of Techtran products and related documents for his or her intended use and assumes all risk and liability whatsoever in connection therewith.

©Copyright 1982.
TECHTRAN INDUSTRIES, INC., 200 COMMERCE DRIVE, ROCHESTER, N.Y. 14623. Printed in U.S.A. All rights reserved. No part of this publication may be reproduced without written permission from Techtran Industries, Inc.

A.4 MONITOR PROGRAM

INPUT FILENAME : DOTREH3.ASM
OUTPUT FILENAME : DOTREH3.OBJ

© D & D Digital Systems Inc., 1985

```
                        ;
                        ;  DOTREH3.ASM        6-11-85
                        ;
                        ;        DOT DATA COLLECTION PROGRAM
                        ;
                        ;
                        ;
                                 .PW      80        ;PAGE WIDTH 80 COLS
                        ;
                        ;
                        ;*************************************************
                         *************
                        ;
                        ;                PAGE ZERO VARIABLES
                        ;
                        ;*************************************************
                         *************
                        ;
00 00                   RAM      EQU      $0000     ;RAM AREA
01 00                   PLSCNT   EQU      $01       ;PULSE COUNT STORAGE
02 00                   DATCNT   EQU      $02       ;DATA BYTE COUNT STORAG
                                                     E
03 00                   AD1      EQU      $03       ;AD1 DATA STORAGE
04 00                   AD2      EQU      $04       ;AD2 DATA STORAGE
05 00                   OUT1H    EQU      $05       ;DATA1  UPPER BYTE
06 00                   OUT1L    EQU      $06       ;DATA1 LOWER BYTE
07 00                   OUT2H    EQU      $07       ;DATA2 UPPER BYTE
08 00                   OUT2L    EQU      $08       ;DATA2 LOWER BYTE
09 00                   PDATA    EQU      $09       ;PRINT DATA FLAG-80H=DA
                                                     TA1,40H=OUT2
0A 00                   COUNT1   EQU      $0A       ;DELAY COUNTER1
0B 00                   COUNT2   EQU      $0B       ;DELAY COUNTER2
0C 00                   PASS     EQU      $0C       ;PASS NUMBER
0D 00                   SWFLAG   EQU      $0D       ;MARKER SWITCH FLAG
0E 00                   SWCNT    EQU      $0E       ;MARKER SW COUNT
0F 00                   CHAN1    EQU      $0F       ;CHANNEL1 DATA
10 00                   CHAN2    EQU      $10       ;CHANNEL2 DATA
                        ;
                        ;*************************************************
                         *************
                        ;
                        ;                CONSTANTS
                        ;
                        ;*************************************************
                         *************
                        ;
                        ;
11 00                   RDFILE   EQU      $11       ;CNTL-Q, READ TAPE FILE
```

```
43          12 00          OPFILE  EQU     $12     ;CNTL-R, OPEN TAPE FILE
44          14 00          CLFILE  EQU     $14     ;CNTL-T, CLOSE TAPE FIL
                                                   E
45          1A 00          REWND   EQU     $1A     ;CNTL-Z, REWIND TAPE FI
                                                   LE
46          13 00          ENFILE  EQU     $13     ;CNTL-S, ENDREAD TAPE F
                                                   ILE
47          07 00          ACK_RW  EQU     $07     ;CNTL-G, REWIND ACK
48          06 00          ACK_WR  EQU     $06     ;CNTL-F, WRITE ACK
49                         ;
50                         ;
51                         ***************************************************
                            ************
52                         ;
53                         ;                PERIPHERAL CHIPS
54                         ;
55                         ;**************************************************
                            ************
56                         ;
57          00 20          ADDRA   EQU     $2000   ;A TO D 6821-DIR REG A
58          00 20          ADPRA   EQU     $2000   ;PER REG A
59          01 20          ADCRA   EQU     $2001   ;CNT REG A
60          02 20          ADDRB   EQU     $2002   ;DIR REG B
61          02 20          ADPRB   EQU     $2002   ;PER REG B
62          03 20          ADCRB   EQU     $2003   ;CNT REG B
63                         ;
64          00 40          GPDRA   EQU     $4000   ;GEN P 6821-DIR REG A
65          00 40          GPPRA   EQU     $4000   ;PER REG A
66          01 40          GPCRA   EQU     $4001   ;CNT REG A
67          02 40          GPDRB   EQU     $4002   ;DIR REG B
68          02 40          GPPRB   EQU     $4002   ;PER REG B
69          03 40          GPCRB   EQU     $4003   ;CNT REG B
70                         ;
71          00 60          ACIADAT EQU     $6000   ;SERIAL PORT-DATA REG
72          01 60          ACIASTA EQU     $6001   ;STATUS REG
73          02 60          ACIACMD         EQU     $6002   ;CMD REG
74          03 60          ACIACTL         EQU     $6003   ;CTL REG
75          6B 00          ICMD            EQU     $6B     ;DTR=L,IRQ=H,RT
                                                           S=L,NO ECHO,EVE
                                                           N PAR
76          3E 00          ICTL            EQU     $3E     ;9600 BAUD,7 BI
                                                           T,1 STOP
77                         ;
78                         ;
79  F800                           .ORG    F800H   ;BEGIN PROGRAM ASSEMBLY
80                         ;
81                         ;
82                         ;**************************************************
                            ************
83                         ;
84                         ;                INITIALIZATION
85                         ;
86                         ;**************************************************
                            ************
87                         ;
88  F800                   INITCPU
89  F800    A2 FF                  LDX     #$FF
```

```
 90   F802   9A                          TXS                 ;TOP OF STACK
 91   F803   78                          SEI                 ;DISABLE CPU INTERRUPTS
 92   F804   D8                          CLD                 ;BINARY MODE
 93                                ;
 94   F805                         INITSER
 95   F805   A9 6B                        LDA     #ICMD       ;INIT COM REG
 96   F807   8D 02 60                     STA     ACIACMD
 97   F80A   A9 3E                        LDA     #ICTL       ;INIT CTL REG
 98   F80C   8D 03 60                     STA     ACIACTL
 99   F80F                         INITAD
100   F80F   A9 04                        LDA     #$04        ;SET TO PER REG
101   F811   8D 03 20                     STA     ADCRB
102   F814   A9 0F                        LDA     #$0F        ;SET A/D CNTL LINES HIG
                                                              H
103   F816   8D 02 20                     STA     ADPRB
104   F819   A9 00                        LDA     #$00        ;SET TO DIR REGS
105   F81B   8D 01 20                     STA     ADCRA
106   F81E   8D 03 20                     STA     ADCRB
107   F821   8D 00 20                     STA     ADDRA       ;SET PA0-PA7 INPUTS
108   F824   A9 0F                        LDA     #$0F        ;PB0-PB3 OUTPUTS,PB4-PB
                                                              7 INPUTS
109   F826   8D 02 20                     STA     ADDRB
110   F829   A9 04                        LDA     #$04        ;SET TO PER REG
111   F82B   8D 01 20                     STA     ADCRA
112   F82E   8D 03 20                     STA     ADCRB
113   F831   A9 04                        LDA     #$04        ;CS1,CS2,WR=L
114   F833   8D 02 20                     STA     ADPRB
115   F836   A9 0F                        LDA     #$0F        ;SET AD LINES HIGH
116   F838   8D 02 20                     STA     ADPRB
117   F83B   A9 08                        LDA     #$08        ;CS1,CS2,RD=L
118   F83D   8D 02 20                     STA     ADPRB
119   F840   A9 0F                        LDA     #$0F        ;SET AD LINES HIGH
120   F842   8D 02 20                     STA     ADPRB
121   F845                         INITGP
122   F845   A9 00                        LDA     #$00        ;SET TO DIR REG
123   F847   8D 01 40                     STA     GPCRA
124   F84A   8D 03 40                     STA     GPCRB
125   F84D   8D 00 40                     STA     GPDRA       ;PA0-PA7 INPUTS
126   F850   A9 01                        LDA     #$01        ;PB0 OUT, PB1-7 IN
127   F852   8D 02 40                     STA     GPDRB
128   F855   A9 0D                        LDA     #$0D
129   F857   8D 01 40                     STA     GPCRA       ;CA1,2 NEG TRANS, PER R
                                                              EG
130   F85A   8D 03 40                     STA     GPCRB       ;CB1,2 NEG TRANS, PER R
                                                              EG
131   F85D                         INITREAD
132   F85D   A0 04                        LDY     #04         ;READ 4 TIMES
133   F85F   A9 11                 TAPERD LDA     #RDFILE     ;CNTL-Q  START READ
134   F861   20 C7 F9                     JSR     PRINT
135   F864   A2 05                        LDX     #05         ;ONE SEC LOOP INIT
136   F866   20 B6 F9              ONESEC JSR     DELAY       ;200 MS DELAY
137   F869   CA                           DEX
138   F86A   D0 FA                        BNE     ONESEC
139   F86C   A9 13                        LDA     #ENFILE     ;CNTL-S  STOP READ
140   F86E   20 C7 F9                     JSR     PRINT
141   F871   88                           DEY
142   F872   D0 EB                        BNE     TAPERD      ;NEXT READ
```

```
F874                    INITRWD
F874   A9 1A                    LDA     #REWND   ; REWIND TAPE
F876   20 C7 F9                 JSR     PRINT
F879                    INITLP1
F879   20 33 FA                 JSR     READTP   ; GET CHAR
F87C   C9 FF                    CMP     #$OFF
F87E   F0 F4                    BEQ     INITRWD
F880   C9 07                    CMP     #ACK_RW  ; ACK REWIND CNTL-G
F882   D0 F5                    BNE     INITLP1  ;TRY NEXT CHAR IN BUFFE
                                                 R
F884                    INITPASS
F884   A9 41                    LDA     #$41     ;SET FIRST PASS TO "A"
F886   85 0C                    STA     PASS
F888                    INITVAR
F888   A9 64                    LDA     #100     ;SWITCH COUNT
F88A   85 0E                    STA     SWCNT
F88C   A9 00                    LDA     #00      ;SWITCH FLAG
F88E   85 0D                    STA     SWFLAG
                        ;
                        ;
                        ;*************************************************
                         ************
                        ;
                        ;                       MAIN PROGRAM
                        ;
                        ;*************************************************
                         ************
                        ;
                        ;
F890   AD 02 40                 LDA     GPPRB    ;WAIT FOR START BUTTON
F893   29 02                    AND     #$02     ;READ SWITCH PORT
F895   D0 F9                    BNE     START    ;MASK FOR SWITCH
F897   20 94 F9                 JSR     DEBOUN   ;SWITCH OPEN
F89A   A5 0D                    LDA     SWFLAG   ;DEBOUNCE SWITCH
F89C   F0 F2                    BEQ     START    ;FALSE SWITCH CLOSE
                        FILEO                    ;OPEN TAPE FILE
F89E   A9 12                    LDA     #OPFILE  ;CNTL-R  START WRITE
F8A0   20 C7 F9                 JSR     PRINT
F8A3                    FILLP1
F8A3   20 33 FA                 JSR     READTP   ; GET ACK
F8A6   C9 FF                    CMP     #$OFF
F8A8   F0 F4                    BEQ     FILEO
F8AA   C9 06                    CMP     #ACK_WR  ;ACK WRITE CNTL-F
F8AC   D0 F5                    BNE     FILLP1   ;TRY NEXT CHAR IN BUFFE
                                                 R
F8AE   A9 01                    LDA     #01      ;TURN ON COLLECT LIGHT
F8B0   8D 02 40                 STA     GPPRB
F8B3   A5 0C                    LDA     PASS     ;SEND PASS NUMBER TO TA
                                                 PE
F8B5   20 C7 F9                 JSR     PRINT
                        CLEAR                    ;CLEAR VARIABLES
F8B8   A9 00                    LDA     #$00
F8BA   85 03                    STA     AD1
F8BC   85 04                    STA     AD2
F8BE   85 09                    STA     PDATA
F8C0   85 0F                    STA     CHAN1
```

```
F8C2   85 10                STA   CHAN2
F8C4   AD 00 40             LDA   GPPRA    ;RESET CA1/CA2
                   LOOP                    ;CLEAR 4 SAMPLE SUM
F8C7   A9 00                LDA   #$00
F8C9   85 05                STA   OUT1H
F8CB   85 06                STA   OUT1L
F8CD   85 07                STA   OUT2H
F8CF   85 08                STA   OUT2L
F8D1               RESTART
F8D1   A9 06                LDA   #$06     ;INIT PULSE COUNTER
F8D3   85 01                STA   PLSCNT
F8D5   A9 05                LDA   #$05     ;INIT DATA COUNTER
F8D7   85 02                STA   DATCNT
                   ;
                   PCNTR                   ;PULSE COUNTING ROUTINE
F8D9   AD 02 40             LDA   GPPRB    ;MARKER SWITCH PORT
F8DC   29 02                AND   #$02     ;SWITCH MASK
F8DE   D0 04                BNE   PULSE    ;SWITCH STILL OPEN
F8E0   C6 0E                DEC   SWCNT    ;SW CLOSURE COUNT
F8E2   F0 30                BEQ   CLOSE    ;END OF PASS
F8E4   2C 01 40    PULSE    BIT   GPCRA    ;DISTANCE PULSE?
F8E7   50 F0                BVC   PCNTR    ;NO PULSE RECEIVED
F8E9   AD 00 40             LDA   GPPRA    ;RESET CA1/CA2
F8EC   C6 01                DEC   PLSCNT
F8EE   D0 11                BNE   PCHAR    ;NOT YET
F8F0   A9 06                LDA   #$06     ;RESET PULSE COUNTER
F8F2   85 01                STA   PLSCNT
F8F4   20 D3 F9             JSR   READAD   ;GET DATA
F8F7   C6 02                DEC   DATCNT
F8F9   F0 0C                BEQ   LASTDAT  ;LAST DATA BYTE
F8FB   20 32 F9             JSR   TOTAL1   ;ADD DATA
F8FE   4C D9 F8             JMP   PCNTR    ;GET MORE DATA
                   PCHAR                   ;PRINT DATA TO TAPE
F901   20 6A F9             JSR   CHAR     ;CHAR SEND ROUTINE
F904   4C D9 F8             JMP   PCNTR    ;GET MORE DATA
                   LASTDAT                 ;DONE TAKING DATA
F907   20 1E FA             JSR   DIV1     ;DIVIDE DATA BY 4
F90A   20 4D F9             JSR   ADJUST   ;ADJUST DATA
F90D   A9 C0                LDA   #$C0     ;SET PRINT DATA FLAG
F90F   85 09                STA   PDATA
F911   4C C7 F8             JMP   LOOP     ;GET MORE DATA
F914               CLOSE
F914   20 94 F9             JSR   DEBOUN   ;DEBOUNCE SWITCH
F917   A9 00                LDA   #00      ;TURN OFF COLLECT LIGHT

F919   8D 02 40             STA   GPPRB
F91C   A9 13                LDA   #ENFILE  ;SEND END OF FILE TO TA
                                           PE
F91E   20 C7 F9             JSR   PRINT
F921   A9 14                LDA   #CLFILE  ;CLOSE TAPE FILE
F923   20 C7 F9             JSR   PRINT
F926   E6 0C                INC   PASS     ;SET NEXT PASS NUMBER
F928   A9 64                LDA   #100     ;INIT MARKER SW COUNTER
F92A   85 0E                STA   SWCNT
F92C   AD 00 40             LDA   GPPRA    ;RESET CA1/CA2
F92F   4C 90 F8             JMP   START
                   ;
```

```
250                                 ;*************************************************
                                     *************
251                                 ;
252                                 ;                ADD DATA BYTE SUBROUTINE
253                                 ;
254                                 ;*************************************************
                                     *************
255                                 ;
256                                 TOTAL1                          ;ADD DATA
257   F932    A5 03                         LDA     AD1       ;GET DATA1
258   F934    18                            CLC
259   F935    65 06                         ADC     OUT1L     ;LOW BYTE
260   F937    85 06                         STA     OUT1L
261   F939    A9 00                         LDA     #$00      ;ADD CARRY TO HI BYTE
262   F93B    65 05                         ADC     OUT1H     ;HI BYTE
263   F93D    85 05                         STA     OUT1H
264                                 TOTAL2                          ;ADD DATA BYTE 2
265   F93F    A5 04                         LDA     AD2       ;GET DATA2
266   F941    18                            CLC
267   F942    65 08                         ADC     OUT2L     ;LOW BYTE
268   F944    85 08                         STA     OUT2L
269   F946    A9 00                         LDA     #$00      ;ADD CARRY TO HI BYTE
270   F948    65 07                         ADC     OUT2H     ;HI BYTE
271   F94A    85 07                         STA     OUT2H
272   F94C    60                            RTS               ;RETURN
273                                 ;
274                                 ;*************************************************
                                     *************
275                                 ;
276                                 ;                ADJUST DATA
277                                 ;
278                                 ;*************************************************
                                     *************
279                                 ;
280   F94D                          ADJUST
281   F94D    A9 20                         LDA     #32       ;ADD OFFSET
282   F94F    18                            CLC
283   F950    65 06                         ADC     OUT1L     ;ADJUST BYTE 1
284   F952    85 0F                         STA     CHAN1
285   F954    A9 20                         LDA     #32       ;ADD OFFSET
286   F956    18                            CLC
287   F957    65 08                         ADC     OUT2L     ;ADJUST BYTE 2
288   F959    85 10                         STA     CHAN2
289                                 OVER                            ;DATA OUT OF BOUNDS TES
                                                                     T
290   F95B    A9 7F                         LDA     #127
291   F95D    C5 0F                         CMP     CHAN1     ;TEST BYTE 1
292   F95F    B0 02                         BCS     NEXTB     ;OKAY
293   F961    85 0F                         STA     CHAN1     ;LIMIT TO $FF
294   F963                          NEXTB
295   F963    C5 10                         CMP     CHAN2     ;TEST BYTE 2
296   F965    B0 02                         BCS     FIXD      ;OKAY
297   F967    85 10                         STA     CHAN2     ;LIMIT TO $FF
298   F969    60                    FIXD    RTS               ;RETURN
299                                 ;
300                                 ;*************************************************
                                     *************
```

```
                                ;
                                ;                    CHARACTER PRINT
                                ;
                                ;*************************************************
                                 *************
                                ;
F96A                            CHAR
F96A    24 09                           BIT     PDATA   ;DATA
F96C    10 11                           BPL     CHAR2   ;NO
F96E    AD 01 60                        LDA     ACIASTA ;ACIA READY?
F971    29 10                           AND     #$10
F973    F0 1E                           BEQ     CHARDN  ;NOT READY
F975    A5 0F                           LDA     CHAN1
F977    8D 00 60                        STA     ACIADAT ;SEND CHARACTER
F97A    A9 40                           LDA     #$40    ;CLEAR 7,SET 6
F97C    85 09                           STA     PDATA
F97E    60                              RTS             ;RETURN
F97F                            CHAR2
F97F    24 09                           BIT     PDATA   ;MORE DATA
F981    50 10                           BVC     CHARDN  ;NO
F983    AD 01 60                        LDA     ACIASTA ;ACIA READY?
F986    29 10                           AND     #$10
F988    F0 09                           BEQ     CHARDN  ;NOT READY
F98A    A5 10                           LDA     CHAN2
F98C    8D 00 60                        STA     ACIADAT ;SEND CHARACTER
F98F    A9 00                           LDA     #$00    ;RESET PRINT FLAG
F991    85 09                           STA     PDATA
F993                            CHARDN
F993    60                              RTS             ;RETURN
                                ;
                                ;*************************************************
                                 *************
                                ;
                                ;                    DEBOUNCE SUBROUTINE
                                ;
                                ;*************************************************
                                 *************
                                ;
F994                            DEBOUN
F994    20 B6 F9                        JSR     DELAY   ;WAIT 200 MSEC.
F997    AD 02 40                        LDA     GPPRB   ;SWITCH PORT
F99A    29 02                           AND     #$02    ;SWITCH MASK
F99C    D0 13                           BNE     FALSE   ;EARLY SW OPEN
F99E                            SHUT
F99E    20 B6 F9                        JSR     DELAY   ;WAIT 200 MSEC
F9A1    AD 02 40                        LDA     GPPRB   ;SWITCH PORT
F9A4    29 02                           AND     #$02    ;SWITCH MASK
F9A6    F0 F6                           BEQ     SHUT    ;SWITCH IS STILL CLOSED
F9A8    20 B6 F9                        JSR     DELAY   ;OPEN, BUT WAIT 200 MSE
                                                        C
F9AB    A9 01                           LDA     #01
F9AD    85 0D                           STA     SWFLAG  ;VALID SWITCH CLOSURE
F9AF    D0 04                           BNE     RETRN
F9B1    A9 00                   FALSE   LDA     #00
F9B3    85 0D                           STA     SWFLAG  ;FALSE SWITCH CLOSURE
F9B5    60                      RETRN   RTS
                                ;
```

```
354                                 ;*************************************************
                                     *************
355                                 ;
356                                 ;                    DELAY SUBROUTINE
357                                 ;
358                                 ;
359                                 ;*************************************************
                                     *************
360                                 ;
361   F9B6                          DELAY
362   F9B6   A9 C8                          LDA     #200     ;200 MS DELAY
363   F9B8   85 0B                          STA     COUNT2
364   F9BA                          ONEMS
365   F9BA   A9 FA                          LDA     #$FA     ;1 MILLISEC COUNT
366   F9BC   85 0A                          STA     COUNT1
367   F9BE                          DOWN1
368   F9BE   C6 0A                          DEC     COUNT1
369   F9C0   D0 FC                          BNE     DOWN1
370   F9C2   C6 0B                          DEC     COUNT2
371   F9C4   D0 F4                          BNE     ONEMS
372   F9C6   60                             RTS
373                                 ;
374                                 ;
375                                 ;*************************************************
                                     *************
376                                 ;
377                                 ;                    PRINT SUBROUTINE
378                                 ;
379                                 ;*************************************************
                                     *************
380                                 ;
381   F9C7                          PRINT
382   F9C7   AA                             TAX                ;MOVE CHARACTER
383   F9C8                          TSTXMT
384   F9C8   AD 01 60                       LDA     ACIASTA ;ACIA READY
385   F9CB   29 10                          AND     #$10
386   F9CD   F0 F9                          BEQ     TSTXMT  ;NOT READY
387   F9CF   8E 00 60                       STX     ACIADAT ;SEND CHARACTER
388   F9D2   60                             RTS                ;RETURN
389                                 ;
390                                 ;*************************************************
                                     *************
391                                 ;
392                                 ;                    READ A/D CONVERTERS
393                                 ;
394                                 ;*************************************************
                                     *************
395                                 ;
396   F9D3                          READAD
397                                 CONST                      ;START CONVERSION
398   F9D3   A9 0C                          LDA     #$0C     ;CS1,CS2=L
399   F9D5   8D 02 20                       STA     ADPRB
400   F9D8   A9 04                          LDA     #$04     ;WR=L
401   F9DA   8D 02 20                       STA     ADPRB
402   F9DD   A9 0F                          LDA     #$0F     ;CNT LINES=H
403   F9DF   8D 02 20                       STA     ADPRB
404                                 DONCV                      ;DONE CONVERSION
```

```
405   F9E2   AD 02 20          LDA     ADPRB
406   F9E5   29 30            AND     #$30     ;MASK INTR BITS
407   F9E7   D0 F9            BNE     DONCV    ;NOT READY
408   F9E9                    READ1
409   F9E9   A9 0E            LDA     #$0E     ;CS1=L
410   F9EB   8D 02 20         STA     ADPRB
411   F9EE   A9 0A            LDA     #$0A     ;RD=L
412   F9F0   8D 02 20         STA     ADPRB
413   F9F3   AD 00 20         LDA     ADPRA    ;READ DATA
414   F9F6   C9 7F            CMP     #127
415   F9F8   90 02            BCC     R_OK1
416   F9FA   A9 7F            LDA     #127
417   F9FC                    R_OK1
418   F9FC   85 03            STA     AD1
419   F9FE   A9 0F            LDA     #$0F     ;CONTROL LINES=H
420   FA00   8D 02 20         STA     ADPRB
421   FA03                    READ2
422   FA03   A9 0D            LDA     #$0D     ;CS2=L
423   FA05   8D 02 20         STA     ADPRB
424   FA08   A9 09            LDA     #$09     ;RD=L
425   FA0A   8D 02 20         STA     ADPRB
426   FA0D   AD 00 20         LDA     ADPRA    ;READ DATA
427   FA10   C9 7F            CMP     #127
428   FA12   90 02            BCC     R_OK2
429   FA14   A9 7F            LDA     #127
430   FA16                    R_OK2
431   FA16   85 04            STA     AD2
432   FA18   A9 0F            LDA     #$0F     ;CONTROL LINES=H
433   FA1A   8D 02 20         STA     ADPRB
434   FA1D   60               RTS              ;RETURN
435                           ;
436                           ;*****************************************************
                               *************
437                           ;
438                           ;                SHIFT SUBROUTINE
439                           ;
440                           ;*****************************************************
                               *************
441                           ;
442   FA1E                    DIV1
443   FA1E   18               CLC
444   FA1F   66 05            ROR     OUT1H    ;HIGH BYTE
445   FA21   66 06            ROR     OUT1L    ;LOW BYTE
446   FA23   18               CLC
447   FA24   66 05            ROR     OUT1H
448   FA26   66 06            ROR     OUT1L
449   FA28                    DIV2
450   FA28   18               CLC
451   FA29   66 07            ROR     OUT2H    ;HIGH BYTE
452   FA2B   66 08            ROR     OUT2L    ;LOW BYTE
453   FA2D   18               CLC
454   FA2E   66 07            ROR     OUT2H
455   FA30   66 08            ROR     OUT2L
456   FA32   60               RTS              ;RETURN
457                           ;*****************************************************
                               *************
458                           ;
```

```
                                ;                READ UART
                                ;
                                ;        WAIT 250 MS FOR RESPONSE
                                ;        RETURN FF IF NO RESPONSE
                                ;        RETURN CHAR IF RESPONSE
                                ;
                                ;*************************************************
                                 *************
FA33                            READTP
FA33    A2 FF                           LDX     #$0FF   ;256 TRIES
FA35                            READLP1
FA35    A9 01                           LDA     #01
FA37    85 0B                           STA     COUNT2  ;WAIT ONE MS
FA39    20 BA F9                        JSR     ONEMS
FA3C    CA                              DEX
FA3D    F0 0B                           BEQ     NO_READ ;GIVE UP
FA3F    AD 01 60                        LDA     ACIASTA ;GET STATUS
FA42    29 08                           AND     #$08    ;RDRF FLAG
FA44    F0 EF                           BEQ     READLP1 ;TRY AGAIN
FA46    AD 00 60                        LDA     ACIADAT ;GET DATA
FA49    60                              RTS
FA4A                            NO_READ
FA4A    A9 FF                           LDA     #$0FF
FA4C    60                              RTS
                                ;
                                ;*************************************************
                                 *************
                                ;
                                ;                VECTORS
                                ;
                                ;*************************************************
                                 *************
                                ;
FFFC                                    .ORG    FFFCH   ;RESET VECTOR
FFFC    00                              .BYTE   00H     ;LOW BYTE
FFFD    F8                              .BYTE   F8H     ;HIGH BYTE
                                ;
                                ;*************************************************
                                 *************
                                ;
FFFE                                    .END
```

********** C R O S S R E F E R E N C E T A B L E **********

ACIACMD	= 6002	:	96							
ACIACTL	= 6003	:	98							
ACIADAT	= 6000	:	313	324	387	478				
ACIASTA	= 6001	:	309	320	384	475				
ACK_RW	= 0007	:	150							
ACK_WR	= 0006	:	183							
AD1	= 0003	:	191	257	418					
AD2	= 0004	:	192	265	431					
ADCRA	= 2001	:	105	111						
ADCRB	= 2003	:	101	106	112					
ADDRA	= 2000	:	107							
ADDRB	= 2002	:	109							
ADJUST	F94D	:	232							
ADPRA	= 2000	:	413	426						
ADPRB	= 2002	:	103	114	116	118	120	399	401	
			403	405	410	412	420	423	425	
			433							
CHAN1	= 000F	:	194	284	291	293	312			
CHAN2	= 0010	:	195	288	295	297	323			
CHAR	F96A	:	228							
CHAR2	F97F	:	308							
CHARDN	F993	:	311	319	322					
CLEAR	F8B8	:								
CLFILE	= 0014	:	242							
CLOSE	F914	:	214							
CONST	F9D3	:								
COUNT1	= 000A	:	366	368						
COUNT2	= 000B	:	363	370	471					
DATCNT	= 0002	:	207	223						
DEBOUN	F994	:	173	237						
DELAY	F9B6	:	136	337	342	346				
DIV1	FA1E	:	231							
DIV2	FA28	:								
DONCV	F9E2	:	407							
DOWN1	F9BE	:	369							
ENFILE	= 0013	:	139	240						
FALSE	F9B1	:	340							
FILEO	F89E	:	182							
FILLP1	F8A3	:	184							
FIXD	F969	:	296							
GPCRA	= 4001	:	123	129	215					
GPCRB	= 4003	:	124	130						
GPDRA	= 4000	:	125							
GPDRB	= 4002	:	127							
GPPRA	= 4000	:	196	217	247					
GPPRB	= 4002	:	170	186	210	239	338	343		
ICMD	= 006B	:	95							
ICTL	= 003E	:	97							
INITAD	F80F	:								
INITCPU	F800	:								
INITGP	F845	:								
INITLP1	F879	:	151							
INITPASS	F884	:								
INITREAD	F85D	:								

```
INITRWD        F874  :    149
INITSER        F805  :
INITVAR        F888  :
LASTDAT        F907  :    224
LOOP           F8C7  :    235
NEXTB          F963  :    292
NO_READ        FA4A  :    474
ONEMS          F9BA  :    371     472
ONESEC         F866  :    138
OPFILE       = 0012  :    177
OUT1H        = 0005  :    199     262     263     444     447
OUT1L        = 0006  :    200     259     260     283     445     448
OUT2H        = 0007  :    201     270     271     451     454
OUT2L        = 0008  :    202     267     268     287     452     455
OVER           F95B  :
PASS         = 000C  :    154     187     244
PCHAR          F901  :    219
PCNTR          F8D9  :    216     226     229
PDATA        = 0009  :    193     234     307     315     318     326
PLSCNT       = 0001  :    205     218     221
PRINT          F9C7  :    134     140     145     178     188     241     243
PULSE          F8E4  :    212
RAM          = 0000  :
RDFILE       = 0011  :    133
READ1          F9E9  :
READ2          FA03  :
READAD         F9D3  :    222
READLP1        FA35  :    477
READTP         FA33  :    147     180
RESTART        F8D1  :
RETRN          F9B5  :    349
REWND        = 001A  :    144
R_OK1          F9FC  :    415
R_OK2          FA16  :    428
SHUT           F99E  :    345
START          F890  :    172     175     248
SWCNT        = 000E  :    157     213     246
SWFLAG       = 000D  :    159     174     348     351
TAPERD         F85F  :    142
TOTAL1         F932  :    225
TOTAL2         F93F  :
TSTXMT         F9C8  :    386


        LINES ASSEMBLED :    496              ASSEMBLY ERRORS :     0
```

A.5 TAPEREAD PROGRAM

```
{ Link Taperead+Util,,Nul,Pascal+Ibm3 }

{ $INCLUDE:'SystemIO.Int' }

{ $INCLUDE:'Screen.INT'   }

Program Tape_Read (Input,Output);

USES SystemIO;
```

© D & D Digital Systems Inc., 1985

```
USES Screen;

{ Program To Read Information Off The Tape Unit And Store It In A
  Format Usable By Bridge                                          }
{ Tape Unit 9600 Baud 7 Bits Even Parity }

Const
  CtrlZ          =        Chr(26);
  CtrlS          =        Chr(19);
  CtrlQ          =        Chr(17);
  CtrlO          =        Chr(15);
  Pad            =        Chr(31);

Type
  Buff_Type      =        Array [1..24000] Of Char;        { 6000 Feet }

Var
  TimeOut        :        Boolean;
  Dev_Setup      :        Dev;
  Dev_Setup2     :        Dev;
  Length         :        Integer;
  Bridge_Id      :        LString(32);
  Date           :        LString(12);
  Square         :        Boolean;
  Right          :        Boolean;
  DistR          :        Integer;
  DistL          :        Integer;
  No_Pass        :        Integer;
  Ch             :        Char;
  Left_Buff      :        Buff_Type;
  Left_L         :        Integer;
  Right_Buff     :        Buff_Type;
  Right_L        :        Integer;
  Temp           :        File Of Char;
  Data           :        File Of Char;
  OK             :        Boolean;
  Pass           :        Char;
  Expected       :        Char;
  First          :        Char;

Function Dosxqq ( Command, Parameter : Word ) : Byte; Extern;

Function Get_Int ( Limit : Integer ) : Integer; Extern;

Procedure Fit ( Var Data : Buff_Type; Var Len : Integer );

Const
  Debug          =        False;

Var
  i,j            :        Integer;
```

```
BEGIN
  If (Debug) Then
    Writeln(' Procedure Fit');
  If (Len < Length) Then
    BEGIN
      i := (Length - Len) Div 2;
      For j := (Len + i) DownTo i + 1 Do
        Data[j] := Data[j - i];
      For j := 1 To i Do
        Data[j] := Pad;
      For j := (Len + i + 1) To Length Do
        Data[j] := Pad;
    END
  Else BEGIN
         i := (Len - Length) Div 2;
         For j := 1 To Length Do
           Data[j] := Data[j + i];
       END;
END;

Function Char_From_Tape : Char;

Const
  Debug          =        False;

Var
  Timer          :        Integer;
  Buff1          :        Stat;
  Buff2          :        Stat;
  i              :        Integer;
  Ch             :        Char;

BEGIN
  If (Debug) Then
    Writeln(' Function Char_From_Tape');
  REPEAT
    Queue_Status(Buff1,Buff2);
    Timer := i;
  UNTIL (Ord(Buff1[6]) = 0);     { Check To See If Everything Has Been }
  i := 2000;                     { Sent To The Tape                    }
  While ((i > 0) And (Ord(Buff1[2]) = 0)) Do
    BEGIN                        { Loop To Wait For Something To Be  }
      i := i - 1;                { Returned From The Tape Or Until A }
      Timer := i;
      Queue_Status(Buff1,Buff2);{ Number (2000) Of Checks Have Been }
    END;                                { Made And A TimeOut Occurs          }
  If (Ord(Buff1[2]) <> 0) Then
    Ch := GetChar(1)
  Else BEGIN
         TimeOut := True;
         Ch := Pad;
       END;
  Char_From_Tape := Ch;
END;

Procedure Write_File;
{ Procedure That Writes The Buffers To The Tempoary File To Await }
{ Further Processing                                              }

Var
  i              :        Integer;

BEGIN
  For i := 1 To Length Do
    Write(Temp,Left_Buff[i]);
  For i := 1 To Length Do
```

```
    Write(Temp,Right_Buff[i]);
END;

Procedure Insert_Blank;

Var
  i              :        Integer;

BEGIN
  For i := 1 To Length Do                    { Left Pass All Pad Chars }
    Write(Temp,Pad);
  For i := 1 To Length Do                    { Right Pass All Pad Chars }
    Write(Temp,Pad);
END;

Procedure Get_File;

Const
  Debug          =        False;

Var
  Buff1          :        Stat;
  Buff2          :        Stat;
  InChar         :        Char;

BEGIN
  If Debug Then
    Writeln('Procedure Get_File');
  OK := True;
  Left_L := 0;
  Right_L := 0;
  Queue_Status(Buff1,Buff2);
  If (Ord(Buff1[2]) = 0) Then    { If Nothing Is In The Tape Buffer }
    PutChar(1,CtrlQ);            { Then Send The Read Command CtrlQ }
  Pass := Char_From_Tape;
  If (Not TimeOut) And (InChar <> CtrlS) Then
    BEGIN
      REPEAT
        InChar := Char_From_Tape;
        If (InChar <> CtrlS) And (Not TimeOut) Then
          BEGIN
            Left_L := Left_L + 1;
            Left_Buff[Left_L] := InChar;
            InChar := Char_From_Tape;
            If (InChar <> CtrlS) And (Not TimeOut) Then
              BEGIN
                Right_L := Right_L + 1;
                Right_Buff[Right_L] := InChar;
              END;
          END;
        UNTIL (TimeOut) Or (InChar = CtrlS);
    END;
END;

Procedure Fit_Buffers;

BEGIN
  If (Left_L <> Length) Then
    Fit(Left_Buff,Left_L);
  If (Right_L <> Length) Then
    Fit(Right_Buff,Right_L);
  No_Pass := No_Pass + 1;
  Expected := Succ(Expected);
END;

Procedure Decide ( Var Ok : Boolean );
```

```
Var
  Ch              :        Char;

BEGIN
  Ok := True;
  If (Not TimeOut) Then
    BEGIN
      Writeln(' Pass #',(Ord(Pass) - Ord(First) + 1):3,Left_L:6,' Samples Taken'
);
      If (Pass = Expected) Then
        If (No_Pass = 0) Then
          If (Left_L > 30) Then        { First Pass Long Enough }
            BEGIN
              Length := Left_L;
              Fit_Buffers;
            END
          Else BEGIN
                 Writeln(' The First Pass Is Rather Short');
                 Write(' Do You Want To Use It ?');
                 REPEAT
                   Ch := Chr(Dosxqq(6,255));
                 UNTIL (Ch In ['n','N','y','Y']);
                 Writeln;
                 If (Ch In ['y','Y']) Then
                   BEGIN
                     Length := Left_L;
                     Fit_Buffers;
                   END
                 Else Ok := False;
               END
        Else If (Left_L > 0.9 * Length) Then
               Fit_Buffers
             Else BEGIN
                    Writeln(' This Pass Is Only ',(Left_L / Length *  100):5:2,'
% As Long As The First');
                    Write(' Do You Want To Use It ?');
                    REPEAT
                      Ch := Chr(Dosxqq(6,255));
                    UNTIL (Ch In ['n','N','y','Y']);
                    Writeln;
                    If (Ch In ['y','Y']) Then
                      Fit_Buffers
                    Else Ok := False;
                  END
      Else BEGIN
             Writeln(' Pass #',(Ord(Expected) - Ord(First) + 1):3,' Was Expected
');
             Writeln(' Do You Want To Use It For Pass #',(Ord(Expected) - Ord(Fi
rst) + 1):3,', ');
             Write('    Not Use It Or Insert A Blank Pass (Y,N,I) ?');
             REPEAT
               Ch := Chr(Dosxqq(6,255));
             UNTIL (Ch In ['n','N','y','Y','i','I']);
             Writeln;
             If (Ch In ['y','Y']) Then
               BEGIN
                 Expected := Pass;
                 If (No_Pass = 0) Then
                   First := Pass;
                 Decide(Ok);
               END
             Else If (Ch In ['i','I']) Then
                    BEGIN
                      If (No_Pass = 0) Then
                        Length := Left_L;
```

```
                    Insert_Blank;
                    No_Pass := No_Pass + 1;
                    Expected := Succ(Expected);
                    Decide(Ok);
                  END
            Else Ok := False;
          END;
    END
  Else Ok := False;
END;

Procedure Trim_Edges ( Var Buff : Buff_Type; p, c : Integer );

Const
  Debug          =        False;

Var
  i              :        Integer;
  Off_Top        :        Integer;
  Off_Bottom     :        Integer;

BEGIN
  If (Not Right) Then
    p := c - p - 1;
  p := p * 9 + 5;
  c := c * 9 + 4;
  Off_Top := (DistR + ((c - p) * (DistL - DistR)) Div c) Div 3;
  Off_Bottom := DistR Div 3 + DistL Div 3 - Off_Top;
  If (Debug) Then
    Writeln(' Trim  Top = ',Off_Top:3,' Bottom = ',Off_Bottom:3);
  For i := 1 To Off_Top Do
    Buff[i] := Pad;
  For i := Length DownTo (Length - Off_Bottom) Do
    Buff[i] := Pad;
END;

Procedure Write_Data_File;

Const
  Debug          =        False;

Var
  Name           :        LString(32);
  i,j            :        Integer;

BEGIN
  Write(' Data File Name : ');
  Readln(Name);
  Assign(Data,Name);
  Reset(Temp);
  Rewrite(Data);
  For i := 0 To 32 Do
    Write(Data,Bridge_Id[i]);
  Write(Data,Chr(No_Pass));
  Write(Data,Chr(Length Div 256),Chr(Length Mod 256));
  If (Square) Then
    Write(Data,'N')
  Else Write(Data,'S');
  Write(Data,Chr(DistR Div 256),Chr(DistR Mod 256));
  Write(Data,Chr(DistL Div 256),Chr(DistL Mod 256));
  If (Right) Then
    Write(Data,'R')
  Else Write(Data,'L');
  For i := 42 To 54 Do
    Write(Data,Date[i - 42]);
  For i := 55 To 63 Do
```

```
    Write(Data,    );
  For i := 0 To (No_Pass - 1) Do
    BEGIN
      If (Odd(i)) Then
        For j := 1 To Length Do
          Read(Temp,Left_Buff[j])
      Else For j := Length DownTo 1 Do
              Read(Temp,Left_Buff[j]);
      If (Odd(i)) Then
        For j := 1 To Length Do
          Read(Temp,Right_Buff[j])
      Else For j := Length DownTo 1 Do
              Read(Temp,Right_Buff[j]);
      If (Not Square) Then
        Trim_Edges(Left_Buff,2 * i,2 * No_Pass - 1);
      For j:= 1 To Length Do
        Write(Data,Left_Buff[j]);
      If (Not Square) Then
        Trim_Edges(Right_Buff,2 * i + 1,2 * No_Pass - 1);
      For j := 1 To Length Do
        Write(Data,Right_Buff[j]);
    END;
  Close(Data);
END;

BEGIN
  Clear_Screen;
  Home;
  Writeln('                                IOWA D.O.T.');
  Writeln;
  Setup1;
  Dev_Status(Dev_Setup,Dev_Setup2);
  Dev_Setup[0] := Chr(13);
  Dev_Setup[1] := Chr(2);
  Dev_Setup[2] := Chr(120);
  Dev_Setup[3] := Chr(0);
  Dev_Setup[4] := Chr(0);
  Dev_Setup[5] := Chr(0);
  Dev_Setup[6] := CtrlS;
  Dev_Setup[7] := CtrlQ;
  Dev_Control1(Dev_Setup);
  Dtr1_True;
  PutChar(1,CtrlZ);                { Rewind The Tape }
  Write(' Bridge ID : ');
  First := 'A';
  Readln(Bridge_Id);
  Write(' Date : ');
  Readln(Date);
  TimeOut := False;
  REPEAT
    Write(' Start On The Right Or Left : ');
    Readln(Ch);
  UNTIL (Ch In ['l','L','r','R']);
  Right := (Ch In ['r','R']);
  REPEAT
    Write(' Normal Or Siewed : ');
    Readln(Ch);
  UNTIL (Ch In ['n','N','s','S']);
  Square := (Ch In ['n','N']);
  DistR := 0;
  DistL := 0;
  If (Not Square) Then
    BEGIN
      Write(' Distance In Inches On The Right : ');
      DistR := Get_Int(4);
      Write(' Distance In Inches On The Left : ');
```

```
      DistL := Get_Int(4);
    END;
  Length := 0;
  Expected := 'A';
  Assign(Temp,'Scratch.me');
  Rewrite(Temp);
  Ch := Char_From_Tape;
  While (Not TimeOut) Do
    BEGIN
      Get_File;
      Decide(Ok);
      If (Ok) Then
        Write_File;
    END;
  PutChar(1,CtrlZ);      { Rewind The Tape }
  Disable1;
  If (No_Pass <> 0) Then
    Write_Data_File
  ELse Writeln(' No Passes Found Or Used ');
  Discard(Temp);
END.
```

A.6 BRIDGE PLOT PROGRAM

```
{ Link Bridge+Util,,Nul,Pascal+Ibm3 }

{ $INCLUDE:'Screen.INT'    }
```

© D & D Digital Systems Inc., 1985

```
Program Bridge (Input,Output);

USES Screen(Home, Clear_Screen, Clear_Line, Up, Down, Left, Right, Pos,
             Reverse, Norm, Setup_Screen, Cursor_Off, Cursor_On);

{ Program to analyse digitied soundings of bridge sections }

CONST
  Max_Length     =      24000;          { 6000 Feet }
  Min_Value      =       31;
  Max_Value      =      127;
  Def_Delam      =      400;            { In Millivolts }
  Increment      =       21;            { In Millivolts }
  First          =     'A';
  Space          =        8;
  Esc            =      Chr(27);
  Def_Printer    =      1;              { TI 855 Compatible }

Type
  Tape_Type      =      Array [1..Max_Length] Of Char;
  Ord_Type       =      Array [1..Max_Length] Of Integer;
  Dist_Type      =      Array [0..Max_Value] Of Integer;
  Bit_Map_Type   =      Super Array [1..*,1..*] Of Byte;
  Bit_Map_Ptr    =      ^Bit_Map_Type;
  ID_Type        =      LString(32);
  Date_Type      =      LString(12);
  Count_Type     =      Array [0..255] Of Integer;
  Dens_Type      =      LString(2);

VAR
  Bridge_ID      :      ID_Type;
  Date           :      Date_Type;
  Num_Passes     :      Integer;
  Normal         :      Boolean;
  Dr, Dl         :      Integer;
  Start_Right    :      Boolean;
  Delam          :      Integer;
  Left_Data      :      Tape_Type;
  Right_Data     :      Tape_Type;
  Length         :      Integer;
  Width          :      Integer;
  Pass           :      Integer;
  OK             :      Boolean;
  Data_Valid     :      Boolean;
  Init           :      Boolean;
  Init_Printer   :      Boolean;
  Bit_Map        :      Bit_Map_Ptr;
  Offset         :      Integer;
  Map_Length     :      Integer;
  Prn            :      Text;
  Info           :      File Of Char;
  Power          :      Array [0..7] Of Integer;
  Total          :      Integer;
  Bad            :      Integer;
  Percent        :      Real;
  Printer_Type   :      Integer;
  Star           :      Dens_Type;
```

```
Function Dosxqq ( Command, Parameter : Word ) : Byte; Extern;

Function Get_Int ( Limit : Integer ) : Integer; Extern;


Procedure Get_Information;

{ Procedure to get from the user the name of a file containing
  the bridge data with the following format

        Information                    Bytes In File

        Bridge_Id                 0        -        32
        # Passes                                   33
        Length in samples         34       -        35
        Normal or Slewed                   36
        Distance in inches (R)    37       -        38
        Distance in inches (L)    39       -        40
        Start_Right                        41
        Date Info                 42       -        54
        Extra space               55       -        63
        Bridge data               64       -        ?        }

CONST
  Debug          =        False;

VAR
  Ch             :        Char;
  File_Name      :        ID_Type;
  Found          :        Boolean;
  i              :        Integer;

BEGIN
  Data_Valid := True;
  Num_Passes := 0;
  Length := 0;
  Normal := True;
  Dr := 0;
  Dl := 0;
  Start_Right := True;
  REPEAT
    Clear_Screen;
    Home;
    Writeln('                    IOWA D.O.T.');
    Writeln;
    Write(' Bridge Data File : ');
    Readln(File_Name);
    Assign(Info,File_Name);
    Info.Trap := True;          { Enable Error Trapping }
    Reset(Info);
    If (Info.Errs <> 0) Then    { Error With File }
      BEGIN
        Info.Errs := 0;         { Reset Error }
        Writeln(' ',File_Name:Ord(File_Name[0]),' Not Found');
        Found := False;
      END
    Else Found := True;
  Until (Found);                { No Errors With File }
  Writeln;
  For i := 0 To 32 Do                    { Read Bridge ID }
    If (Not Eof(Info)) Then
      Read(Info,Bridge_Id[i])
    Else Data_Valid := False;
  If (Data_Valid) Then
    Writeln(Bridge_Id:48)
```

```
Else Writeln(' ERROR IN DATA FILE');
Writeln;
If (Not Eof(Info)) And (Data_Valid) Then        { Get Number Of  }
  BEGIN                                         { Passes In File }
    Read(Info,Ch);
    Num_Passes := Ord(Ch);
  END
Else Data_Valid := False;
If (Not Eof(Info)) And (Data_Valid) Then
  BEGIN
    Read(Info,Ch);
    Length := Ord(Ch);
  END
Else Data_Valid := False;
If (Not Eof(Info)) And (Data_Valid) Then
  BEGIN
    Read(Info,Ch);
    Length := Length * 256 + Ord(Ch);
  END
Else BEGIN
       Data_Valid := False;
       Length := 0;
     END;
If (Not Eof(Info)) And (Data_Valid) Then
  BEGIN
    Read(Info,Ch);
    Normal := (Ch In ['n','N']);
  END
Else Data_Valid := False;
If (Not Eof(Info)) And (Data_Valid) Then
  BEGIN
    Read(Info,Ch);
    Dr := Ord(Ch);
  END
Else Data_Valid := False;
If (Not Eof(Info)) And (Data_Valid) Then
  BEGIN
    Read(Info,Ch);
   Dr := Dr * 256 + Ord(ch);
  END
Else BEGIN
       Data_Valid := False;
       Dr := 0;
     END;
If (Not Eof(Info)) And (Data_Valid) Then
  BEGIN
    Read(Info,Ch);
    Dl := Ord(Ch);
  END
Else Data_Valid := False;
If (Not Eof(Info)) And (Data_Valid) Then
  BEGIN
    Read(Info,Ch);
   Dl := Dl * 256 + Ord(ch);
  END
Else BEGIN
       Data_Valid := False;
       Dl := 0;
     END;
If (Not Eof(Info)) And (Data_Valid) Then
  BEGIN
    Read(Info,Ch);
    Start_Right := (Ch In ['r','R']);
  END
Else Data_Valid := False;
For i := 42 To 54 Do
```

```
    If (Not Eof(Info)) Then
      Read(Info,Date[i - 42]);
  For i := 55 To 63 Do
    If (Not Eof(Info)) Then
      Read(Info,Ch)
    Else Data_Valid := False;
  REPEAT
    Write(' Delamination In mV (',Def_Delam:3,') : ');
    Delam := Get_Int(4);
    If (Delam = 0) Then Delam := Def_Delam;
  UNTIL (Delam > 0);
END;


Procedure Read_Data_From_Tape;

CONST
  Debug          =        False;

VAR
  L_Length       :        Integer;
  R_Length       :        Integer;
  Pass_Found     :        Integer;
  Answer         :        Char;
  i              :        Integer;

BEGIN
  If Debug Then
      Writeln(' Read Data From Tape');
  For i := 1 To Length Do
    If (Not Eof(Info)) Then
      Read(Info,Left_Data[i])
    Else Data_Valid := False;
  For i := 1 To Length Do
    If (Not Eof(Info)) Then
      Read(Info,Right_Data[i])
    Else Data_Valid := False;
  Ok := Data_Valid;
END;

Function BaseLine (Var Data : Tape_Type) : Integer;

{ Determines The Baseline Of The Data. Assumes That The Most
  Frequently Occuring Value Is The Baseline                    }

CONST
  Debug          =        False;

VAR
  Dist           :        Dist_Type;
  Base           :        Integer;
  i              :        Integer;

BEGIN
  If Debug Then Writeln(' BaseLine');
  For i := Min_Value To Max_Value Do              { Zeroes The Distribution }
    Dist[i] := 0;                                 { Array                   }
  For i := 1 To Length Do                         { Adds Up The Occurances  }
    Dist[Ord(Data[i])] := Dist[Ord(Data[i])] + 1;{ Of The Values            }
  i := Min_Value + 1;
  Base := i;
  While (i <= 100) Do                       { Searches For The Most    }
    BEGIN                                   { Frequent Value In The    }
      If (Dist[Base] < Dist[i]) Then        { Array                    }
        Base := i;
      i := i + 1;
```

```
    END;
  BaseLine := Base;
END;

Procedure Insert_Into_BitMap;

{ Inserts The Tape Data Into The Bit Map }

CONST
  Debug          =       False;

VAR
  i, j           :        Integer;
  Row            :       Integer;
  Col            :       Integer;
  Base_L         :        Integer;
  Base_R         :        Integer;
  Delam_L        :        Integer;
  Delam_R        :        Integer;
  Bit            :        Byte;

BEGIN
  If Debug Then Writeln(' Insert_Into_BitMap');
  If (Init) Then                                    { Dynamically Allocates }
    BEGIN                                           { The Memory Needed     }
      Map_Length := ((Length - 1) Div 8 + 1);
      Offset := Map_Length * 8 - Length;
      New(Bit_Map,Map_Length,Width);
      For i := 1 To Map_Length Do
        For j := 1 To Width Do
          Bit_Map^[i,j] := 0;
      Init := False;
    END;
  If (Start_Right) Then
    Col := Width - Pass * 2 + 1
  Else Col := Pass * 2 - 1;
  Base_L := BaseLine(Left_Data);
  Base_R := BaseLine(Right_Data);
  Delam_L := Base_L + Delam Div Increment;
  Delam_R := Base_R + Delam Div Increment;
  For i := (Length - 1) DownTo 0 Do
    BEGIN
      Bit := Power[(i + Offset) Mod 8];
      Row := (i + Offset) Div 8 + 1;
      If (Ord(Left_Data[i + 1]) >= Delam_L) Then
        Bit_Map^[Row,Col] := Bit_Map^[Row,Col] + Bit;
      If (Ord(Right_Data[i + 1]) >= Delam_R) Then
        Bit_Map^[Row,Col + 1] := Bit_Map^[Row,Col + 1] + Bit;
    END;
END;

Procedure Percentage;

VAR
  i, j, k        :        Integer;

BEGIN
  Total := 0;
  Bad := 0;
  Percent := 0;
  For i := 1 To Map_Length Do
    For j := 1 To Width Do
      For k := 0 To 7 Do
        If (Odd(Bit_Map^[i,j] Div Power[k])) Then
          Bad := Bad + 1;
  Total := Length * Width;
```

```
    If (Not Normal) Then
      Total := Total - (Dr + Dl) * Width;
    Percent := Bad / Total;
  END;

  Procedure Process_Section;

  CONST
    Debug          =        False;

  BEGIN
    If Debug Then Writeln(' Process_Section');
    OK := True;
    Init := True;
    Pass := 1;
    Width := (2 * Num_Passes);
    While (Pass <= Num_Passes) Do
      BEGIN
        Read_Data_From_Tape;
        If (Ok) Then
          Insert_Into_BitMap
        Else Pass := Num_Passes;
        Pass := Pass + 1;
      END;
    Percentage;
  END;

  Procedure Header;

  BEGIN
    If (Init_Printer) And (Printer_Type = 1) Then
      BEGIN
        Writeln(Prn,Esc,'@');
        Write(Prn,Esc,'q');
      END
    Else If (Init_Printer) And (Printer_Type = 2) Then
            BEGIN
              Writeln(Prn,Esc,'@');
              Write(Prn,Esc,'G');
            END
          Else If (Init_Printer) And (Printer_Type = 3) Then
                  BEGIN
                    Writeln(Prn,Esc,'@');
                    Write(Prn,Esc,'4');
                  END;
    Init_Printer := False;
    Writeln(Prn,'IOWA D.O.T.':45);
    Writeln(Prn,'DELAMINATION MAP':48);
    Writeln(Prn);
    Writeln(Prn,Bridge_Id:46);
    Writeln(Prn);
    Writeln(Prn,Date:(Ord(Date[0]) + 18),' ':(21 - Ord(Date[0])),'Delamination at
 ',Delam:5,' mV');
    Writeln(Prn);
    Write(Prn,'Length = ':20,((Length * 3) Div 12):2,' Feet ',((Length * 3) Mod 12
 ):2,' Inches');
    Writeln(Prn,'Width = ':11,((Width * 9) Div 12):2,' Feet ',((Width * 9) Mod 12)
 :2,' Inches');
    Writeln(Prn);
    If (Not Normal) Then
      BEGIN
        Write(Prn,'Skew Distance On Left : ':26,Dl:4,'Inches':7);
        Writeln(Prn,'Skew Distance On Right : ':27,Dr:4,'Inches':7);
        Writeln(Prn);
      END;
    Write(Prn,'Total Area = ':24,(Total / 144 * 27):7:2,' Square Feet');
```

```
  Writeln(Prn,'Percentage Bad = ':20,(Percent * 100):4:2,'%');
  Writeln(Prn);
END;

Procedure Dumb_Printer;

BEGIN
  Header;
END;

Procedure Print_Top ( Density : Dens_Type );

VAR
  i              :        Integer;

BEGIN
  Write(Prn,Esc,Density,Chr((12 * Width + 5) Mod 256),Chr((12 * Width + 2) Div 2
56));
  For i := 1 To (12 * Width + 5) Do
    Write(Prn,Chr(1));
END;

Procedure Print_Bar ( Density : Dens_Type );

BEGIN
  Write(Prn,Esc,Density,Chr(1),Chr(0),Chr(255));
END;

Procedure Print_Tic ( Density : Dens_Type; Which : Integer );

BEGIN
  Write(Prn,Esc,Density,Chr(3),Chr(0));
  If (Odd(Which)) Then
    Write(Prn,Chr(128),Chr(128))
  Else Write(Prn,Chr(0),Chr(0));
  Write(Prn,Chr(128));
END;

Procedure Print_Bottom ( Density : Dens_Type );

VAR
  i,j            :        Integer;
  Spacing        :        Integer;

BEGIN
  Write(Prn,Esc,Density,Chr((12 * Width + 5) Mod 256),Chr((12 * Width + 2) Div 2
56));
  Write(Prn,Chr(128),Chr(128),Chr(128));
  For i := 0 To (Width * 12 - 1) Do
    If (i Mod 16 = 0) Then
      Write(Prn,Chr(248))
    Else If (i Mod 8 = 0) Then
            Write(Prn,Chr(224))
         Else Write(Prn,Chr(128));
  If ((Width * 12) Mod 16 = 0) Then
    Write(Prn,Chr(248),Chr(248))
  Else If ((Width * 12) Mod 8 = 0) Then
         Write(Prn,Chr(224),Chr(224))
       Else Write(Prn,Chr(128),Chr(192));
  Writeln(Prn);
  Write(Prn,'0':6);
  If (Printer_Type = 1) Or (Printer_Type = 3) Then
    Spacing := 18
  Else If (Printer_Type = 2) Then
         Spacing := 20
       Else Spacing := 1;
```

```
  For i := 1 To ((Width * 3) Div 8) Do
    BEGIN
      Write(Prn,Esc,Density,Chr(Spacing),Chr(0));
      For j := 1 To Spacing Do
        Write(Prn,Chr(0));
      Write(Prn,(i + i):2);
    END;
END;

Procedure Scale_4_To_3 ( Density : Dens_Type );

CONST
  Debug          =        False;

VAR
  N1             :        Char;
  N2             :        Char;
  i, j, k, m, n  :        Integer;
  Ch             :        Integer;
  Bit            :        Byte;

BEGIN
  Header;
  n := (Length - 1) Div 8;
  If Debug Then
    Writeln(' Scale 4 To 3 - Density = ',Density);
  N1 := Chr((Width * 12) Mod 256);
  N2 := Chr((Width * 12) Div 256);
  Writeln(Prn,Esc,'3',Chr(24));          { Sets Line Spacing }
  Writeln(Prn);
  Writeln(Prn,'FEET':5);
  Write(Prn,' ':5);
  Print_Top(Density);
  Writeln(Prn);
  For i := 1 To Map_Length Do
    BEGIN
      Write(Prn,(n - i + 2) * 2:5);
      Print_Tic(Density,1);
      Print_Bar(Density);
      Write(Prn,Esc,Density,N1,N2);
      For k := 1 To Width Do
        BEGIN
          Bit := 1;
          If (Odd(Bit_Map^[i,k] Div Bit)) Then
            Ch := 240
          Else Ch := 0;
          Bit := Bit + Bit;
          If (Odd(Bit_Map^[i,k] Div Bit)) Then
            Ch := Ch + 15;
          For m := 1 To 12 Do
            Write(Prn,Chr(Ch));
        END;
      Print_Bar(Density);
      Writeln(Prn);
      Write(Prn,' ':5);
      Print_Tic(Density,2);
      Print_Bar(Density);
      Write(Prn,Esc,Density,N1,N2);
      For k := 1 To Width Do
        BEGIN
          Bit := 4;
          If (Odd(Bit_Map^[i,k] Div Bit)) Then
            Ch := 240
          Else Ch := 0;
          Bit := Bit + Bit;
          If (Odd(Bit_Map^[i,k] Div Bit)) Then
```

```
            Ch := Ch + 15;
          For m := 1 To 12 Do
            Write(Prn,Chr(Ch));
        END;
      Print_Bar(Density);
      Writeln(Prn);
      Write(Prn,' ':5);
      Print_Tic(Density,3);
      Print_Bar(Density);
      Write(Prn,Esc,Density,N1,N2);
      For k := 1 To Width Do
        BEGIN
          Bit := 16;
          If (Odd(Bit_Map^[i,k] Div Bit)) Then
            Ch := 240
          Else Ch := 0;
          Bit := Bit + Bit;
          If (Odd(Bit_Map^[i,k] Div Bit)) Then
            Ch := Ch + 15;
          For m := 1 To 12 Do
            Write(Prn,Chr(Ch));
        END;
      Print_Bar(Density);
      Writeln(Prn);
      Write(Prn,' ':5);
      Print_Tic(Density,4);
      Print_Bar(Density);
      Write(Prn,Esc,Density,N1,N2);
      For k := 1 To Width Do
        BEGIN
          Bit := 64;
          If (Odd(Bit_Map^[i,k] Div Bit)) Then
            Ch := 240
          Else Ch := 0;
          Bit := Bit + Bit;
          If (Odd(Bit_Map^[i,k] Div Bit)) Then
            Ch := Ch + 15;
          For m := 1 To 12 Do
            Write(Prn,Chr(Ch));
        END;
      Print_Bar(Density);
      Writeln(Prn);
    END;
  Write(Prn, 0:5);
  Print_Bottom(Density);
  Writeln(Prn);
  If Start_Right Then
    If (Printer_Type = 2) Then
      Writeln(Prn,'START':(8 + Width * 2))
    Else Writeln(Prn,'START':(8 + Width + (8 * Width) Div 10))
  Else Writeln(Prn,'START':8);
  Writeln(Prn,Esc,'2',Chr(12));
END;

Procedure Graph ( Density : Dens_Type );

CONST
  Debug          =        False;

VAR
  n, m           :        Integer;
  n1, n2         :        Integer;
  mL, mO         :        Integer;
  i, j           :       Integer;
  Bit            :        Integer;
  Set_Bit        :        Integer;
```

```
    Test_Bit        :       Integer;
    Row             :       Integer;
    Col             :       Integer;
    Dist            :       Integer;
    Edge            :       Integer;
    Line            :       Array [-4..600] Of Integer;

  BEGIN
    If (Debug) Then
      Writeln(' Procedure Graph');
    If (Printer_Type = 1) Or (Printer_Type = 3) Then
      n := (512 Div Width)
    Else  n := (420 Div Width);  { Number of dots per bit horizontally }
    m := (n Div 3);              { Number of dots vertically }
    If (m = 0) Then
      m := 1;
    mL := m * Length;
    mO := m * Offset;
    Dist := 0;
    n := 3 * m;                  { Set for true 3 : 1 ratio }
    n1 := (Width * n + 6) Mod 256;
    n2 := (Width * n + 6) Div 256;
    If (Debug) Then
      Writeln('   Vert = ',m:4,'  Horz = ',n:4,' n1, n2 ',n1:3,n2:4);
    Line[0] := 255;
    Writeln(Prn,Esc,'3',Chr(24));
    Write(Prn,' ':6);
    Write(Prn,Esc,Density,Chr(n1),Chr(n2),Chr(0),Chr(0),Chr(0),Chr(0));
    For i := 1 To (Width * n + 2) Do
      Write(Prn,Chr(1));
    Writeln(Prn);
    Set_Bit := 128;
    For i := -4 To 480 Do
      Line[i] := 0;
    If ((Length Mod 4) = 0) Then
      BEGIN
        Line[-1] := 128;
        Line[-2] := 128;
      END;
    If ((Length Mod 8) = 0) Then
      BEGIN
        Line[-3] := 128;
        Dist := (Length Div 8) * 2;
        Line[-4] := 128;
      END;
    For Bit := 0 To (mL - 1) Do
      BEGIN
        Row := ((Bit + mO) Div m) Div 8 + 1;
        i := ((Bit + mO) Div m) Mod 8;
        Test_Bit := Power[i];
        If (((mL - Bit) Mod (4 * m)) = 0) Then
          BEGIN
            Line[-1] := Set_Bit;
            Line[-2] := Set_Bit;
          END;
        If (((mL - Bit) Mod (8 * m)) = 0) Then
          BEGIN
            Line[-3] := Set_Bit;
            Line[-4] := Set_Bit;
            Dist := (mL - Bit) Div (8 * m) * 2;
          END;
        For Col := 1 To Width Do
          If (Odd(Bit_Map^[Row,Col] Div Test_Bit)) Then
            Line[Col] := Line[Col] + Set_Bit;
        Set_Bit := Set_Bit Div 2;
        If (Set_Bit = 0) Then
```

```
        BEGIN
          If (Dist = 0) Then
            Write(Prn,' ':6)
          Else Write(Prn,Dist:6);
          Dist := 0;
          Write(Prn,Esc,Density,Chr(n1),Chr(n2));
          For i := -4 To 0 Do
            BEGIN
              Write(Prn,Chr(Line[i]));
              Line[i] := 0;
            END;
          For i := 1 To Width Do
           BEGIN
              For j := 1 To n Do
                Write(Prn,Chr(Line[i]));
              Line[i] := 0;
           END;
          Writeln(Prn,Chr(255));
          Line[0] := 255;
          Set_Bit := 128;
        END;
    END;
  For i := -4 To -1 Do
    Line[i] := 0;
  For i := -4 To Width Do
    Line[i] := Line [i] + Set_Bit;
  Edge := 255-(Set_Bit Div 2)-(Set_Bit Div 4)-(Set_Bit Div 8)-(Set_Bit Div 16)-(
Set_Bit Div 32)-(Set_Bit Div 64)-(Set_Bit Div 128);
  Line[0] := Edge;
  Write(Prn,'0':6);
  m := 2;
  Set_Bit := Set_Bit Div 2;
  If (Set_Bit = 0) Then
    BEGIN
      Dist := 0;
      Write(Prn,Esc,Density,Chr(n1),Chr(n2));
      For i := -4 To 0 Do
        BEGIN
          Write(Prn,Chr(Line[i]));
          Line[i] := 0;
        END;
      For i := 1 To Width Do
       BEGIN
          For j := 1 To n Do
            Write(Prn,Chr(Line[i]));
          Line[i] := 0;
       END;
      Writeln(Prn,Chr(255));
      Line[0] := 255;
      Set_Bit := 128;
      Write(Prn,' ':6);
    END;
  For Bit := 1 To 4 Do
    BEGIN
      For Col := 0 To (Width Div m) Do
        Line[Col * m] := Line[Col * m] + Set_Bit;
      If (Bit = 2) Then
        m := m + m;
      Set_Bit := Set_Bit Div 2;
      If (Set_Bit = 0) Then
        BEGIN
          Write(Prn,Esc,Density,Chr(n1),Chr(n2));
          For i := -4 To 0 Do
            BEGIN
              Write(Prn,Chr(Line[i]));
              Line[i] := 0;
```

```
            END;
          For i := 1 To Width Do
            BEGIN
              For j := 2 To n Do
                Write(Prn,Chr(Line[1]));
              Write(Prn,Chr(Line[i]));
              Line[i] := 0;
            END;
          Writeln(Prn,Chr(255));
          Line[0] := 255;
          Set_Bit := 128;
          Write(Prn,' ':6);
        END;
    END;
  If (Set_Bit <> 128) Then
    BEGIN
      Write(Prn,Esc,Density,Chr(n1),Chr(n2));
      For i := -4 To 0 Do
        Write(Prn,Chr(Line[i]));
      For i := 1 To Width Do
        BEGIN
          For j := 2 To n Do
            Write(Prn,Chr(Line[1]));
          Write(Prn,Chr(Line[i]));
        END;
      Writeln(Prn,Chr(0));
    END;
  Write(Prn,'0':7);
  For i := 1 To (Width Div 4) Do
    BEGIN
      Write(Prn,Esc,Density,Chr((4 * n - 14) Mod 256),Chr((4 * n - 14) Div 256))
;
      For j := 1 To (4 * n - 14) Do
        Write(Prn,Chr(0));
      Write(Prn,(i * 3):2);
    END;
  Writeln(Prn);
  If (Start_Right) Then
    Writeln(Prn,'START':76)
  Else Writeln(Prn,'START':9);
  Writeln(Prn,Esc,'2');
END;

Procedure Map;

BEGIN
  Header;
  If (Printer_Type = 1) Then
    Graph('N')
  Else If (Printer_Type = 2) Then
          Graph('K')
        Else If (Printer_Type = 3) Then
                Graph(Star)
              Else Dumb_Printer;
  Writeln(Prn,Chr(12));
END;

Procedure Init_Count ( Var Count : Count_Type );

CONST
  Debug          =        False;

VAR
  i,j            :        Integer;

BEGIN
```

```
  If (Debug) Then
    Writeln(' Procedure Init_Count');
  For i := 0 To 255 Do
    BEGIN
      If (Odd(i Div Power[0])) Then
        Count[i] := 1
      Else Count[i] := 0;
      If (Odd(i Div Power[1])) Then
        Count[i] := 1 + Count[i];
      If (Odd(i Div Power[2])) Then
        Count[i] := 1 + Count[i];
      If (Odd(i Div Power[3])) Then
        Count[i] := 1 + Count[i];
      If (Odd(i Div Power[4])) Then
        Count[i] := 1 + Count[i];
      If (Odd(i Div Power[5])) Then
        Count[i] := 1 + Count[i];
      If (Odd(i Div Power[6])) Then
        Count[i] := 1 + Count[i];
      If (Odd(i Div Power[7])) Then
        Count[i] := 1 + Count[i];
    END;
  If (Debug) Then
    BEGIN
      Write(Prn,'      ');
      For i := 0 To 15 Do
      Write(Prn,i:4);
      Writeln(Prn);
      Write(Prn,'      __');
      For i := 0 To 15 Do
      Write(Prn,'____');
      Writeln(Prn);
      For i := 0 To 15 Do
        BEGIN
          Write(Prn,i:4,' |');
          For j := 0 To 15 Do
            Write(Prn,Count[i * 16 + j]:4);
          Writeln(Prn,Chr(12));
        END;
    END;
END;

Procedure Map_Percent;

CONST
  Debug          =        False;

VAR
  Count          :        Count_Type;
  Totals         :        Array [0..64] Of Integer;
  Col_Off        :        Integer;
  Row_Off        :        Integer;
  No_Percent     :        Integer;
  i,j            :        Integer;
  Index          :        Integer;

BEGIN
  If (Debug) Then
    Writeln('Procedure Map_Percent');
  If (Width > 40) AND (Printer_Type In [1,2]) Then        { Compressed }
    Write(Prn,Chr(15));                                   { Print Mode }
  Header;
  If  (Odd(Map_Length)) Then
    Row_Off := 1
  Else Row_Off := 0;
  If (Start_Right) Then
```

```
    Col_Off := ((Width - 1) Div 4 + 1) * 4 - Width
  Else Col_Off := 0;
  No_Percent := ((Width - 1) Div 4);
  Init_Count(Count);
  For i := 0 To 64 Do
    Totals[i] := 0;
  Writeln(Prn,'   FEET');
  Write(Prn,(((Map_Length - 1) Div 2 + 1) * 4):6,'--');
  For i := 0 To No_Percent Do
    Write(Prn,'-------');
  Writeln(Prn);
  For i := 1 To Map_Length Do
    BEGIN
      For j := 0 To (Width - 1) Do
        BEGIN
          Index := Bit_Map^[i,j + 1];
          If (Index < 0) Then
            Index := Index + 256;
          Totals[(j + Col_Off) Div 4] := Totals[(j + Col_Off) Div 4] + Count[Ind
ex];
        END;
    If (Not Odd(i + Row_Off)) Then
      BEGIN
        Write(Prn'¦':8);
        For j := 0 To No_Percent Do
         Write(Prn,'¦':7);
        Writeln(Prn);
        Write(Prn,'¦':8);
        For j := 0 To No_Percent Do
          Write(Prn,(Totals[j] / 0.64):5:1,' ¦');
        Writeln(Prn);
        Write(Prn'¦':8);
        For j := 0 To No_Percent Do
         Write(Prn,'¦':7);
        Writeln(Prn);
        Write(Prn,(((Map_Length - i) Div 2) * 4):6,'--');
        For j := 0 To No_Percent Do
          Write(Prn,'-------');
        Writeln(Prn);
        If (Debug) Then
          BEGIN
            For j := 0 To No_Percent Do
              Write(Totals[j]:5);
            Writeln;
          END;
        For j := 0 To No_Percent Do
          Totals[j] := 0;
      END;
    END;
  Write(Prn,'¦':8);
  For i := 0 To No_Percent Do
    Write(Prn,'¦':7);
  Writeln(Prn);
  Write(Prn,'0':8);
  For i := 1 To No_Percent + 1 Do
    Write(Prn,(i * 3):7);
  Writeln(Prn);
  If (Start_Right) Then
    Writeln(Prn,'START':(18 + 7 * No_Percent))
  Else Writeln(Prn,'START':11);
  If (Width > 40) AND (Printer_Type In [1,2]) Then        { Compressed }
    Write(Prn,Chr(18));                                   { Print Mode }
  Writeln(Prn,Chr(12));          { Form Feed }            {     Off    }
END;

Procedure Display_Options;
```

```
CONST
  Debug          =        False;
  Valid          =        ['1','2','p','P','t','T','s','S','e','E','a','A'];

VAR
  In_Ch          :                Integer;
  Ch             :        Char;
  Quit           :                Boolean;
  String         :        LString(80);

BEGIN
  If Debug Then Writeln(' Display_Options');
  Quit := False;
  REPEAT
    Clear_Screen;
    Home;
    Writeln;
    Writeln('                IOWA D.O.T.');
    Writeln;
    Writeln('            DELAMINATION MAPS');
    Writeln('                1 : 8 Inches Wide');
    Writeln('                2 : 4 Dots Per 3 Inches');
    Writeln;
    Writeln('            FUNCTIONS');
    Writeln('                P : Percentages');
    Write('                  ');
    String := 'T : TI 855 Printer';
    If (Printer_Type = 1) Then
      Reverse(String)
    Else Write(String);
    Writeln;
    Write('                  ');
    String := 'S : Star Printer';
    If (Printer_Type = 3) Then
      Reverse(String)
    Else Write(String);
    Writeln;
    Write('                  ');
    String := 'E : Epson Printer';
    If (Printer_Type = 2) Then
      Reverse(String)
    Else Write(String);
    Writeln;
    Write('                  ');
    String := 'A : Alphanumeric Printer';
    If Not (Printer_Type In [1,2,3]) Then
      Reverse(String)
    Else Write(String);
    Writeln;
    Writeln('                Q : Quit');
    REPEAT
      In_Ch := Dosxqq(6,255);
    UNTIL (In_Ch <> 0);
    Ch := Chr(In_Ch);
    Writeln;
    Writeln;
    If (Ch In Valid) Then
      Write('   Working...');
    Cursor_Off;
    Case Ch Of
      '1'      : Map;
      '2'      : If (Printer_Type = 1) Then
                   If (Width < 45) Then
                     Scale_4_To_3('N')
                   Else Scale_4_To_3('O')
```

```
                Else If (Printer_Type = 2) Then
                        If (Width < 35) Then
                          Scale_4_To_3('K')
                        Else Scale_4_To_3('L')
                      Else If (Printer_Type = 3) Then
                             Scale_4_To_3(Star)
                           Else Dumb_Printer;
      'p','P' : Map_Percent;
      't','T' : BEGIN
                  Init_Printer := True;
                  Printer_Type := 1;
                END;
      'e','E' : BEGIN
                  Init_Printer := True;
                  Printer_Type := 2;
                END;
      's','S' : BEGIN
                  Init_Printer := True;
                  Printer_Type := 3;
                END;
      'a','A' : BEGIN
                  Init_Printer := False;
                  Printer_Type := -1;
                END;
      'Q','q' : Quit := True;
     Otherwise { };
     END;
  UNTIL (Quit);
  Cursor_On;
END;

BEGIN
  Star[1] := '*';
  Star[2] := Chr(5);
  Star[0] := Chr(2);
  Power[0] := 1;
  Power[1] := 2;
  Power[2] := 4;
  Power[3] := 8;
  Power[4] := 16;
  Power[5] := 32;
  Power[6] := 64;
  Power[7] := 128;
  Assign(Prn,'PRN');
  Rewrite(Prn);
  Printer_Type := Def_Printer;
  Init_Printer := True;
  REPEAT
    Get_Information;
    Process_Section;
    If Ok Then Display_Options;
    Writeln;
    Write(' Continue With Another Section (<cr> = No) ? ');
    Dispose(Bit_Map);
    Close(Info);
    Readln(Bridge_ID);
  UNTIL (Ord(Bridge_ID[0]) = 0) Or (Bridge_ID[1] In ['n','N']);
  If (Printer_Type = 1) Or (Printer_Type = 2) Then
    Write(Prn,Esc,'@');
  Close(Prn);
END.
```

```
Module Utilities;

Function Get_Int ( Limit : Integer ) : Integer;

CONST
  Digits = ['1','2','3','4','5','6','7','8','9','0'];

VAR
  i       : Integer4;
  j       : Integer;
  Minus   : Boolean;
  Ch      : Char;

BEGIN
  i := 0;
  j := 0;
  Minus := False;
  If Not Eoln Then Read(ch) Else Ch := '?';
  While (Not (Ch In Digits)) And (Ch <> '-') And (Not Eoln) Do
    Read(ch);
  If (Not Eoln) And (Ch = '-') Then
    BEGIN
      Minus := True;
      Read(Ch);
    END;
  If (Not (Ch In Digits)) And (Not Eoln) Then
    BEGIN
      Minus := False;
      i := Get_Int(Limit);
    END
  Else While (Ch In Digits) And (j < Limit) Do
         BEGIN
           i := i * 10 + Ord(Ch) - Ord('0');
           j := j + 1;
           If Eoln Then j := Limit
           Else Read(ch);
         END;
  If Minus Then i := -i;
  If (i <= MaxInt) And (i >= -MaxInt) Then
    Get_Int := Retype(Integer,i)
  Else BEGIN
         Writeln(' Integer Quantity Overflow; Value Set To ZERO');
         Writeln('  Value Must Be Between',MaxInt:7,' And',-MaxInt:8);
         Get_Int := 0;
       END;
  Readln;
END;

END.
```

A.7 SAMPLE PLOTS

IOWA D.O.T.
DELAMINATION MAP

D.O.T. Example Plot

July 1 1984 Delamination at 400 mV

Length = 18 Feet 0 Inches Width = 18 Feet 0 Inches

Total Area = 324.00 Square Feet Percentage Bad = 3.13%

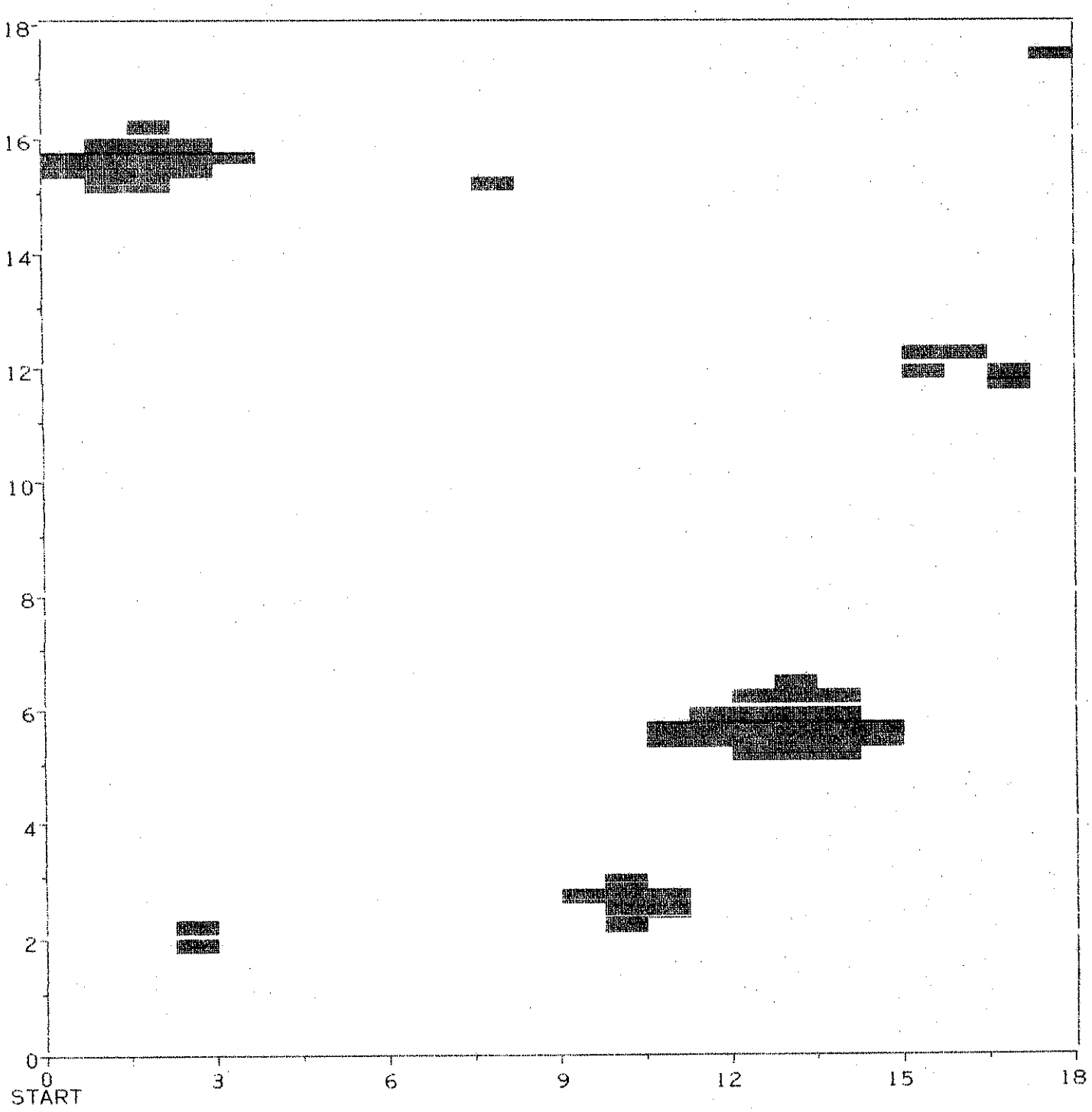

IOWA D.O.T.
DELAMINATION MAP

D.O.T. Example Plot

July 1 1984 Delamination at 400 mV

Length = 18 Feet 0 Inches Width = 18 Feet 0 Inches

Total Area = 324.00 Square Feet Percentage Bad = 3.13%

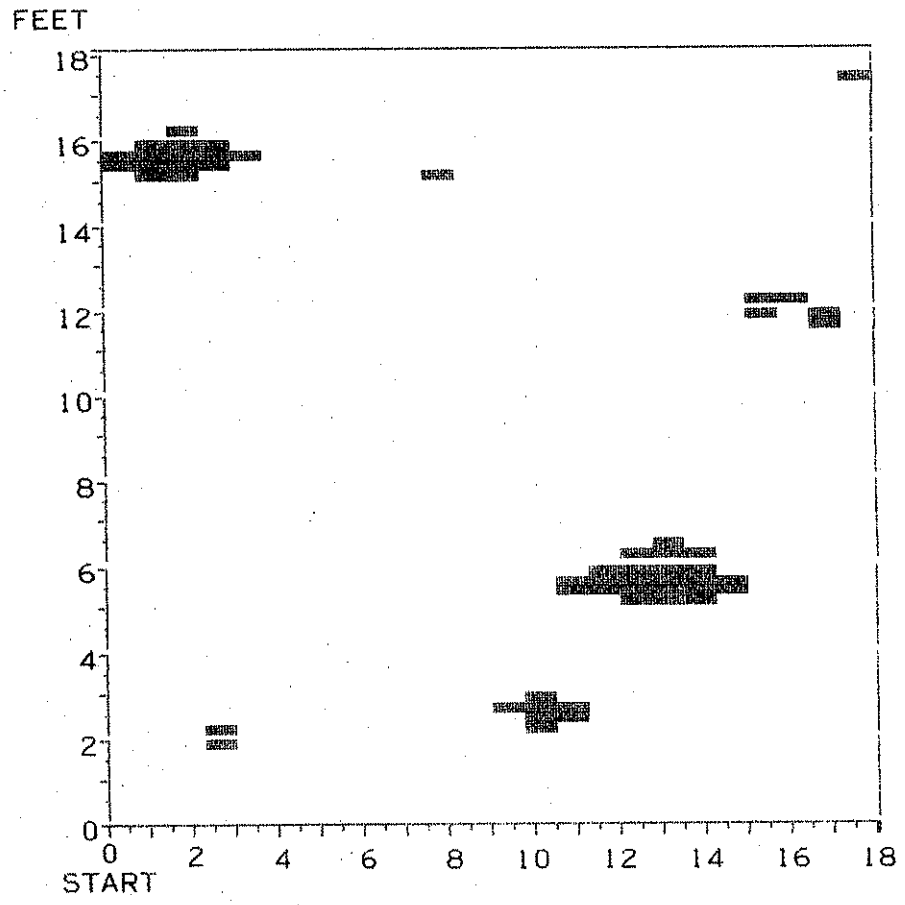

IOWA D.O.T.
DELAMINATION MAP

D.O.T. Example Plot

July 1 1984 Delamination at 400 mV

Length = 18 Feet 0 Inches Width = 18 Feet 0 Inches

Total Area = 324.00 Square Feet Percentage Bad = 3.13%

FEET

20	1.6	0.0	0.0	0.0	0.0	1.6
16	20.3	1.6	1.6	0.0	0.0	3.1
12	0.0	0.0	0.0	0.0	0.0	4.7
8	0.0	0.0	0.0	7.8	28.1	0.0
4	3.1	0.0	0.0	10.9	0.0	0.0
0						

0 (START) 3 6 9 12 15 18

IOWA D.O.T.
DELAMINATION MAP

Very Wide Bridge

6 - 20 -85 Delamination at 400 mV

Length = 12 Feet 6 Inches Width = 33 Feet 0 Inches

Total Area = 412.50 Square Feet Percentage Bad = 2.73%

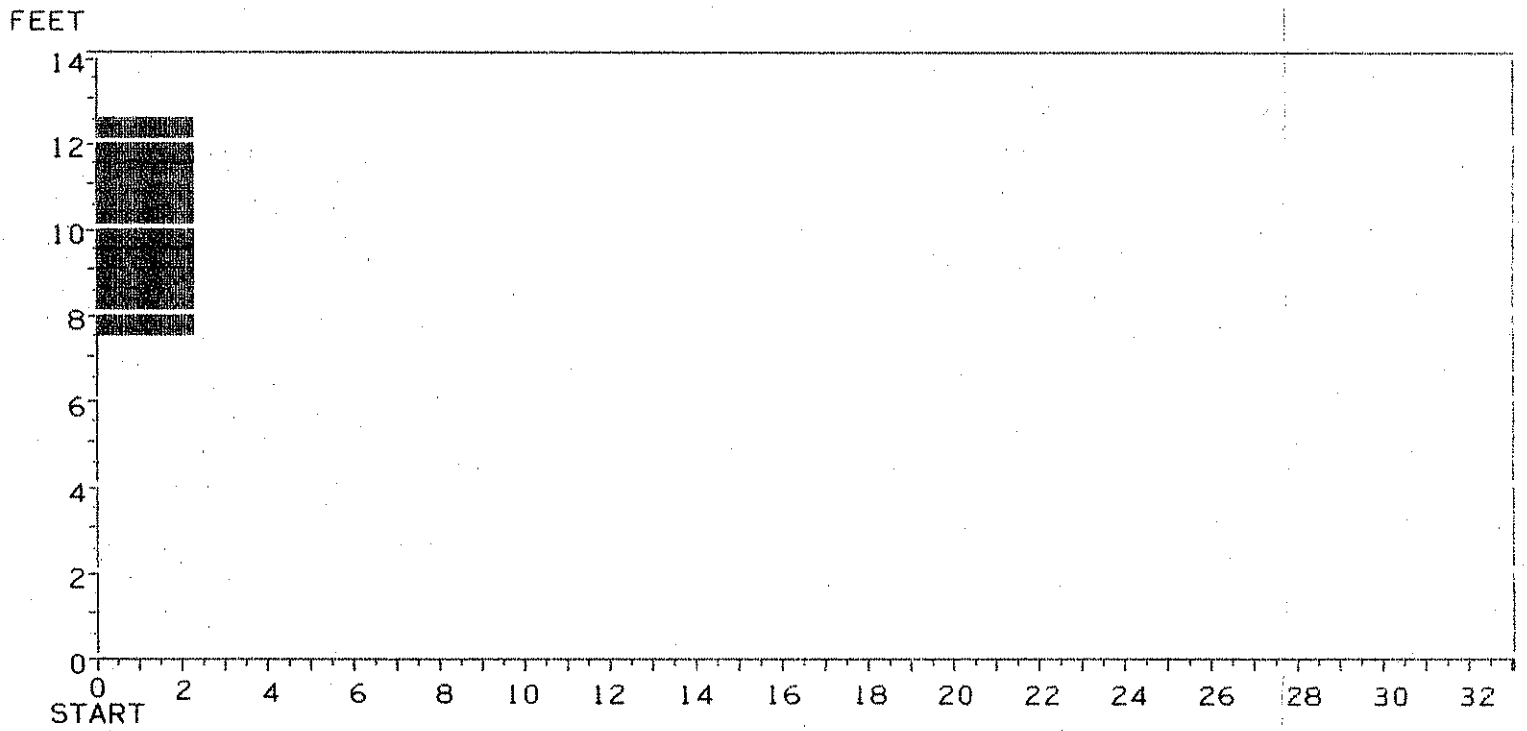

IOWA D.O.T.
DELAMINATION MAP

Very Wide Bridge

6 - 20 -85 Delamination at 400 mV

Length = 12 Feet 6 Inches Width = 33 Feet 0 Inches

Total Area = 412.50 Square Feet Percentage Bad = 2.73%

FEET											
16	9.4	0.0	0.0	0.0	0.0	0.0	0.0	0.0	0.0	0.0	0.0
12	75.0	0.0	0.0	0.0	0.0	0.0	0.0	0.0	0.0	0.0	0.0
8	9.4	0.0	0.0	0.0	0.0	0.0	0.0	0.0	0.0	0.0	0.0
4	0.0	0.0	0.0	0.0	0.0	0.0	0.0	0.0	0.0	0.0	0.0
0											
	0 START	3	6	9	12	15	18	21	24	27	30	33