TOTAL
16

PROJECT INDENTIFICATION NUMBER
09-00-000-010
PROJECT NUMBER
ITS-000-S(380)--25-00

DYNAMIC MESSAGE SIGNS
ITS-000-S(380)--25-00
LETTING DATE 5/18/2010

STATEWIDE

Iowa Department of Transportation
Highway Division

PLANS OF PROPOSED IMPROVEMENTS ON THE

INTERSTATE or PRIMARY ROAD SYSTEM

STATEWIDE

DYNAMIC MESSAGE SIGNS

Runway and Ladder Retrofit/Installation
at Various Dynamic Message Sign Locations

IOWA ONE CALL
1-800-292-8989
www.iowaonecall.com
811

The Iowa Department of Transportation Standard Specifications for Highway and Bridge Construction, series 2009, plus General Supplemental Specifications; and applicable Supplemental Specifications, Developmental Specifications, and Special Provisions, shall apply to construction on this project.

Value Engineering Saves. Refer to Article 1105.15 of the Specifications.

NO MILEAGE SUMMARY

INDEX OF SHEETS

No.	Description
A.1	TITLE SHEET
A.2-A.5	LOCATION MAPS
B.1	TYPICAL INSTALLATION
C.1	ESTIMATE OF QUANTITIES AND GENERAL INFORMATION
V.1-V.9	STRUCTURAL DETAILS

STANDARD ROAD PLANS

105-4
04-20-10

The following Standard Road Plans shall be considered applicable to construction work on this project.

Number	Date	Title
TC-1	10-17-06	Work Not Affecting Traffic
TC-402	04-20-10	Shoulder Closure (Multi-Lane)
TC-418	04-20-10	Lane Closure on Divided Highway
TC-420	04-20-10	Lane Closure at Ramps

REFER TO SHEETS A.2-A.5
FOR LOCATIONS

INDEX OF SEALS

SHEET NO.	NAME	TYPE
A.1	John M. Narigon	Primary Signature Block
V.1	James R. Hauber	Structural Details

SIGNING DESIGN

LICENSED PROFESSIONAL ENGINEER John M. Narigon 11842 IOWA

I hereby certify that this engineering document was prepared by me or under my direct personal supervision and that I am a duly licensed Professional Engineer under the laws of the State of Iowa.

Signature: John M. Narigon — Date: 3/02/2010

Printed or Typed Name: John M. Narigon

My license renewal date is December 31, 2011

Pages or sheets covered by this seal: A.1-A.5, B.1, C.-1

W:\Projects\0000001005\TrafEng\00-000S-380\00-000S-380.A01 jnarigo 3/15/2010

"17TH"

I-235 WB
MP 2.7
STA. 221+50

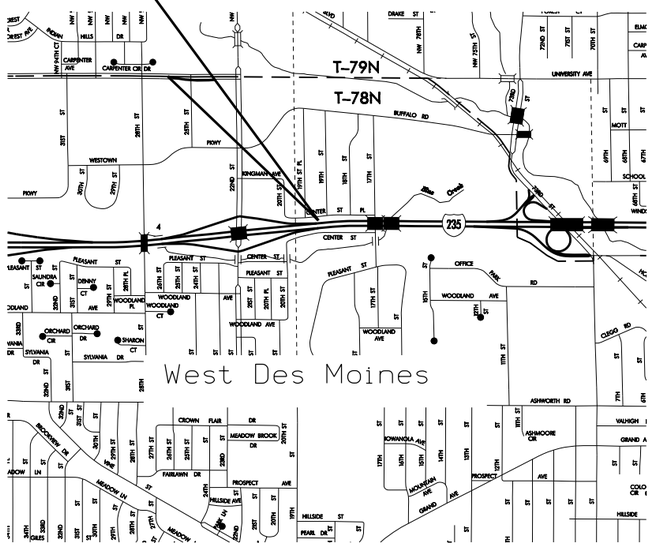

"CORPORATE WOODS"

I-35 SB
MP 88.4
STA. 3126+20

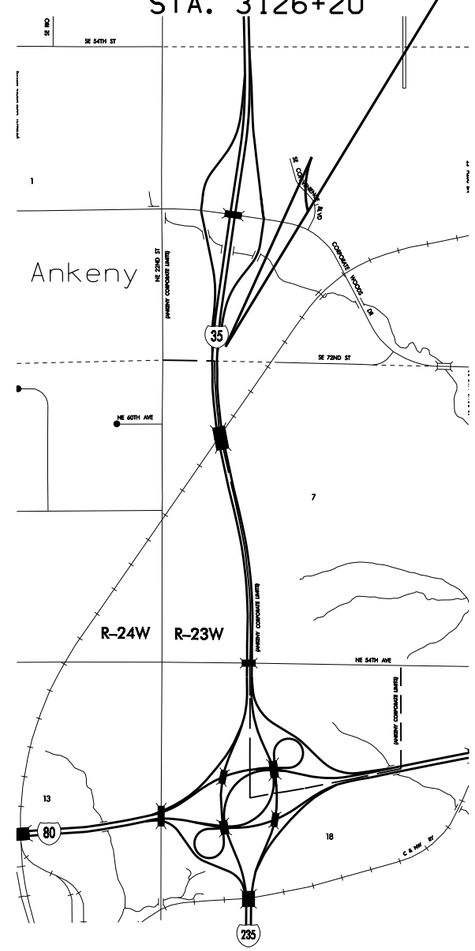

"BROADWAY"

I-235 WB
MP 13.2
STA. 615+55

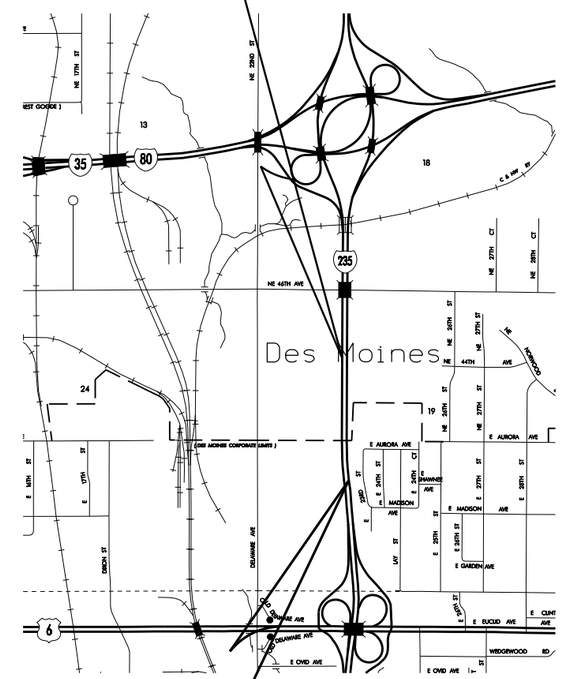

"EUCLID"

I-235 EB
MP 12.8
STA. 609+20

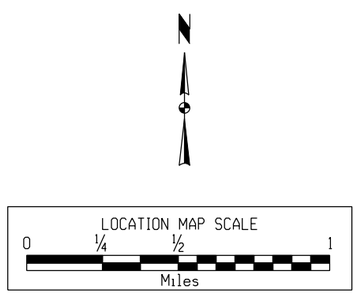

POLK COUNTY

STATEWIDE COUNTY	PROJECT NUMBER ITS-000-S(380)--25-00	SHEET NUMBER A.2

"WILSON"

I-380 SB
STA. 249+25
MP 18.3

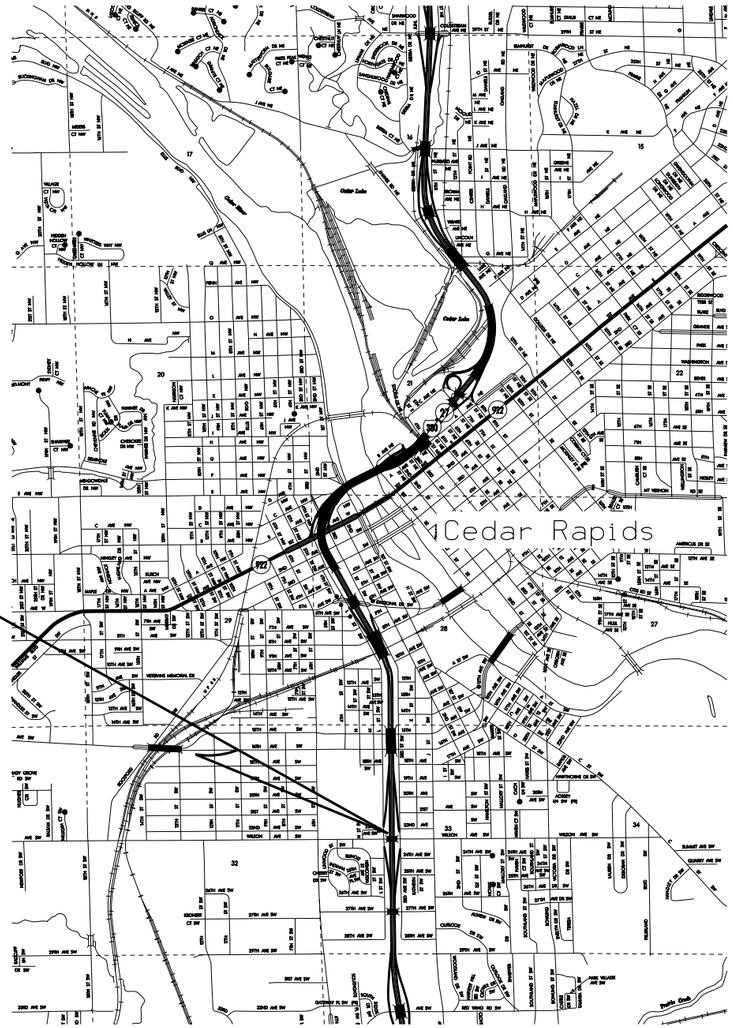

LOCATION MAP SCALE
0 ¼ ½ 1
Miles

LINN COUNTY

"12TH"

I-80 WB
MP 242.0
STA. 802+00

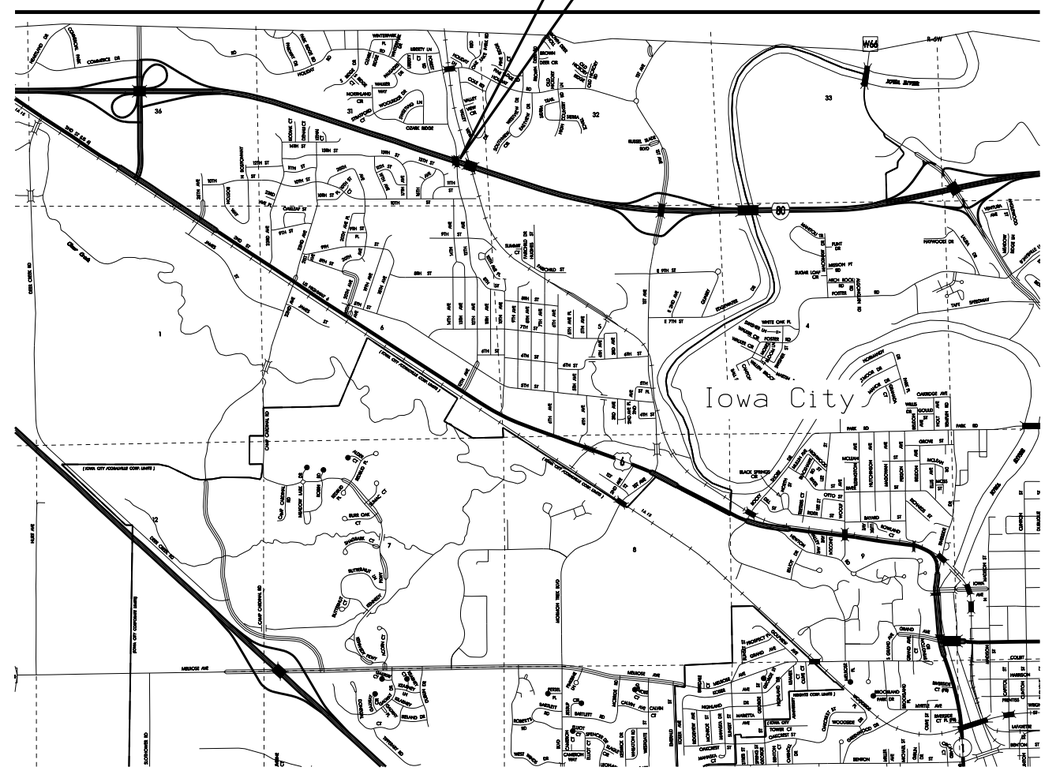

LOCATION MAP SCALE
0 ¼ ½ 1
Miles

JOHNSON COUNTY

W:\Projects\0000001005\TrafEng\00-0005-380\00-0005-380.A01

jnarigo

3/15/2010

ENGLISH 10000 Resolution	Iowa Department of Transportation	OFFICE OF TRAFFIC & SAFETY	DESIGN TEAM NARIGON/JENSEN	STATEWIDE COUNTY	PROJECT NUMBER ITS-000-S(380)--25-00	SHEET NUMBER A.4

"RAILROAD"

I-29 SB
MP 52.9
STA. 221+50

"MADISON AVE"

I-80 WB
MP 4.6
STA. 1034+00

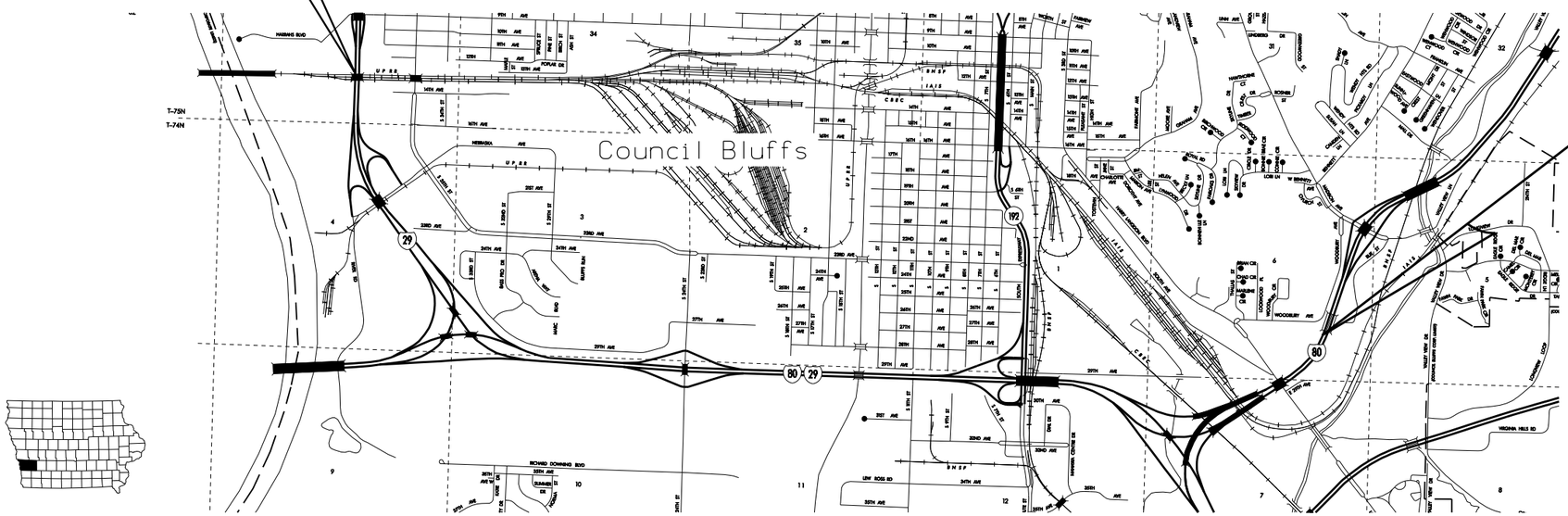

LOCATION MAP SCALE
0 ¼ ½ 1
Miles

POTTAWATTAMIE COUNTY

"NEWTON"

I-80 EB
MP 163.1
STA. 2425+50

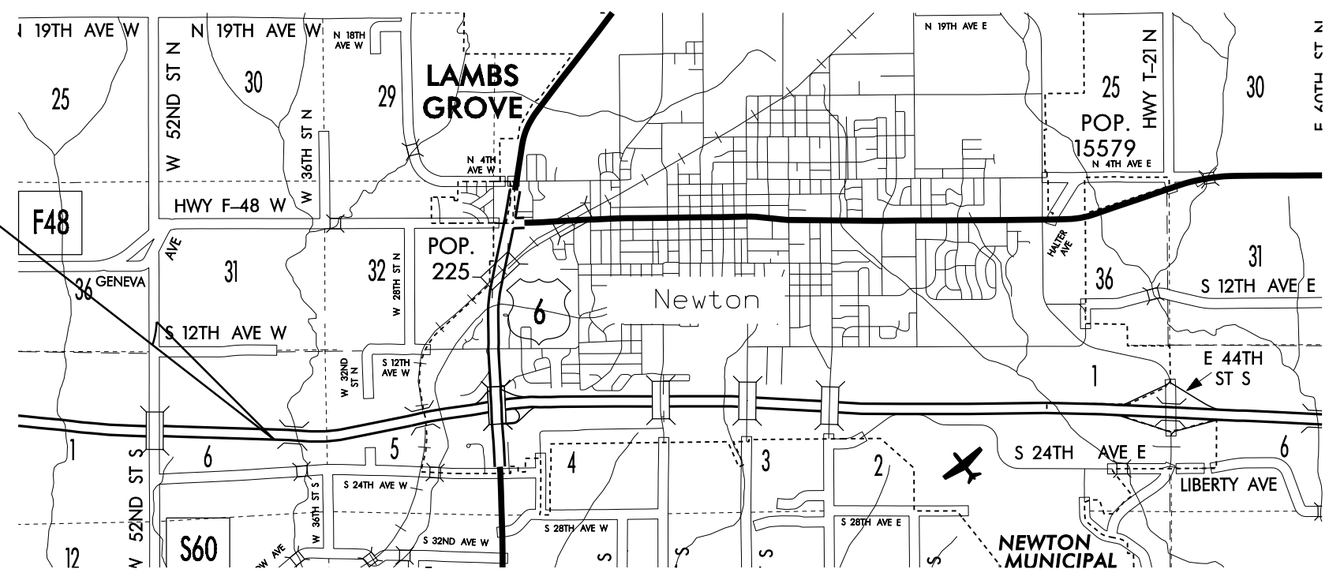

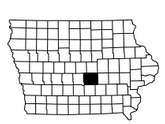

LOCATION MAP SCALE
0 ½ 1
Miles

JASPER COUNTY

W:\Projects\0000001005\TrafEng\00-0005-380\00-0005-380.A01

jnarigo

3/15/2010

ENGLISH 10000 Resolution	Iowa Department of Transportation	OFFICE OF TRAFFIC & SAFETY	DESIGN TEAM NARIGON/JENSEN	STATEWIDE COUNTY	PROJECT NUMBER ITS-000-S(380)--25-00	SHEET NUMBER A.3

"SERGEANT BLUFF"

I-29 NB
MP 141.7
STA. 155+00

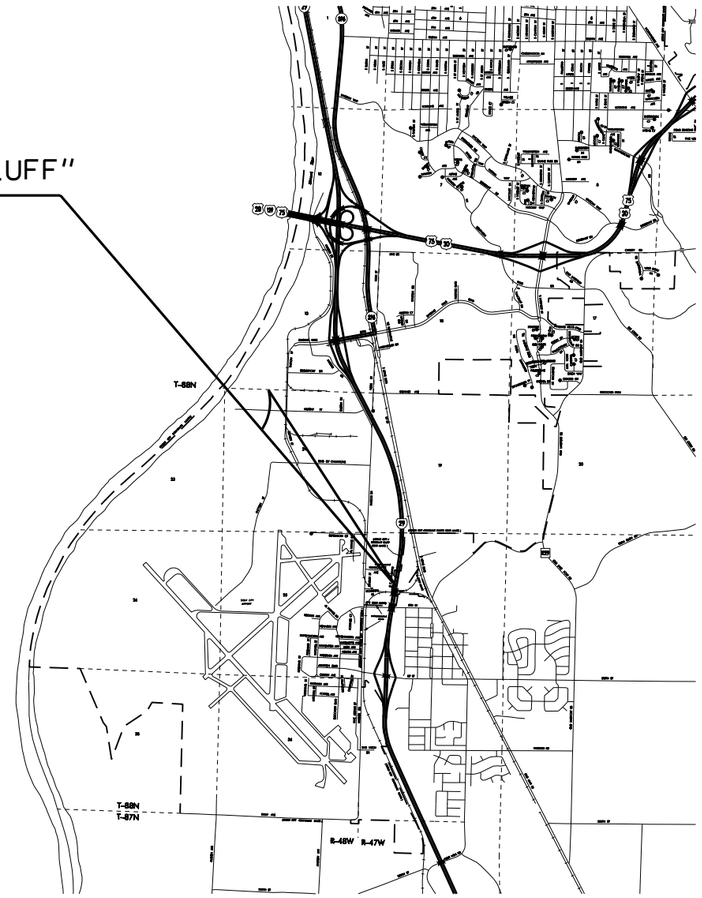

LOCATION MAP SCALE
0 ½ 1
Miles

WOODBURY COUNTY

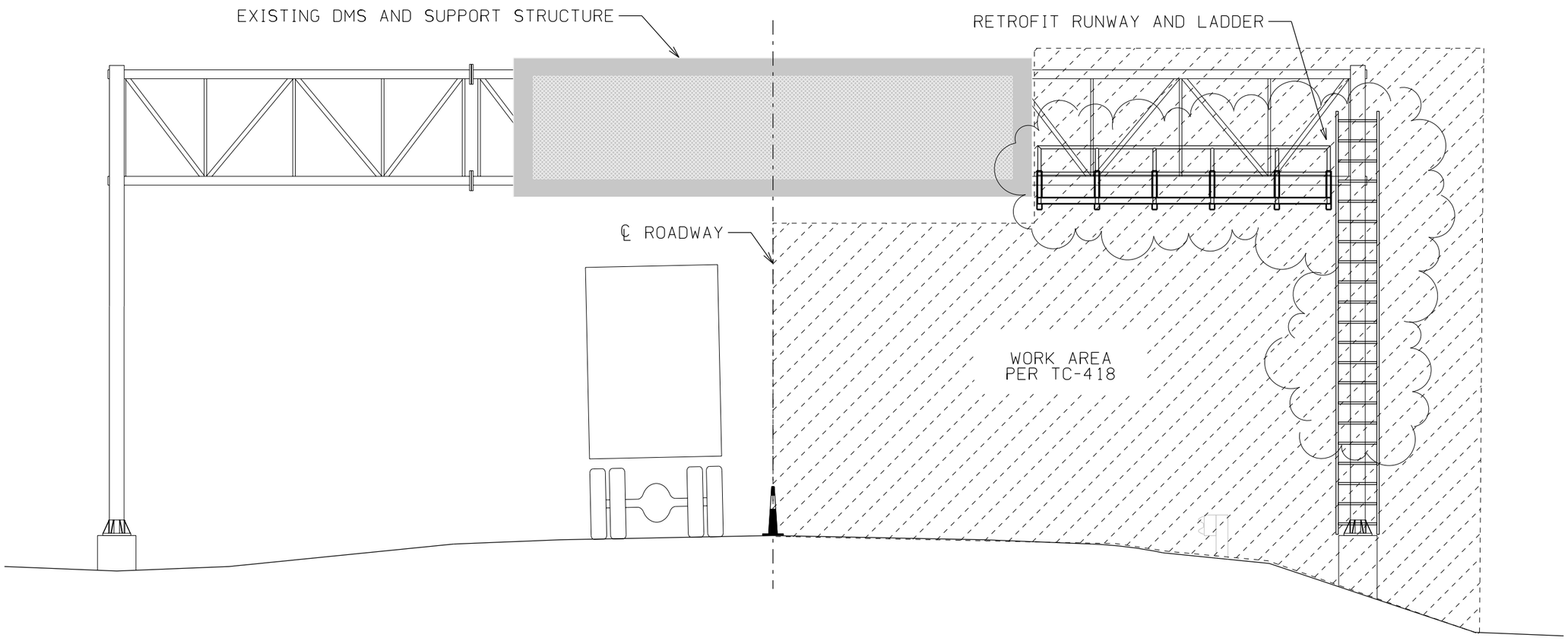

TYPICAL INSTALLATION

SEE STRUCTURAL DETAIL SHEETS FOR SITE SPECIFIC INFORMATION

W:\Projects\00000001005\TrafEng\00-000S-380\00-000S-380.B01
jnarigo
3/15/2010

ESTIMATED PROJECT QUANTITIES

ITEM NO.	ITEM CODE	ITEM	UNIT	TOTAL	AS BUILT QUAN.
1	2401-6745650	REMOVAL OF EXISTING STRUCTURES	LS	1.00	
2	2528-8445110	TRAFFIC CONTROL	LS	1.00	
3	2533-4980005	MOBILIZATION	LS	1.00	
4	2599-9999005	RETROFIT RUNWAY AND LADDER	EACH	10	

TRAFFIC CONTROL PLAN

108-23A
10-29-02

ROADWAYS SHALL REMAIN OPEN TO TRAFFIC AT ALL TIMES.

TRAFFIC CONTROL SHALL BE IN ACCORDANCE WITH THE TC SERIES STANDARD ROAD PLANS INDCATED IN TABULATION 105-4.

LANE CLOSURES SHALL BE RESTICTED AS FOLLOWS:

POLK AND JASPER COUNTIES: NO LANE CLOSURES 6 AM - 9 AM OR 3 PM - 6 PM WEEKDAYS. NO LANE CLOSURES AFTER 1 PM ON WEEKENDS.

WOODBURY COUNTY: NO LANE CLOSURES FROM 6 AM TO 9 AM.

POTTAWATTAMIE COUNTY: LANES CLOSURES ONLY ALLOWED FROM 10 PM TO 6 AM

LINN AND JOHNSON COUNTIES: LANES CLOSURES ONLY ALLOWED FROM 9 PM SUNDAY TO 6 AM MONDAY AND 7 PM TO 6 AM MONDAY THRU THURSDAY

TABULATION OF SPECIAL EVENTS

102-15
10-29-02

Event	Location	Date
POLK AND JASPER COUNTIES		
USAC TRIPLE CROWN SERIES	IOWA SPEEDWAY, NEWTON	MAY 22, 2010
US CELLULAR NASCAR CAMPING WORLD SERIES	IOWA SPEEDWAY, NEWTON	MAY 23, 2010
FIRESTONE INDY LIGHTS SERIES	IOWA SPEEDWAY, NEWTON	JUNE 19, 2010
INDYCAR SERIES	IOWA SPEEDWAY, NEWTON	JUNE 20, 2010
ARCA SERIES	IOWA SPEEDWAY, NEWTON	JULY 10, 2010
NASCAR CAMPING WORLD TRUCK SERIES	IOWA SPEEDWAY, NEWTON	JULY 11, 2010
USAR PRO CUP SERIES	IOWA SPEEDWAY, NEWTON	JULY 30, 2010
NASCAR NATIONWIDE SERIES	IOWA SPEEDWAY, NEWTON	JULY 31, 2010
2011 EVENTS WILL BE SIMILAR TO 2010 EVENTS.		
WOODBURY COUNTY		
POTTAWATTAMIE COUNTY		
COLLEGE WORLD SERIES	OHAMA	JUNE 18-JUNE 29, 2010
FIREWORKS DISPLAY		JULY 4, 2010
RIVER CITY ROUND-UP		LATE SEPTEMBER
SEPTEMBERFEST		LATE AUGUST - EARLY SEPTEMBER
LINN COUNTY		
FREEDOM FESTIVAL	CEDAR RAPIDS	JUNE 13-JULY 3, 2010
JOHNSON COUNTY:		
UI HOME FOOTBALL GAMES	IOWA CITY	SEPT. 11, 25, OCT. 16, 23, NOV. 13, 2010

ESTIMATE REFERENCE INFORMATION

ITEM NO.	ITEM CODE	DESCRIPTION
1	2401-6745650	REMOVAL OF EXISTING STRUCTURES SEE TABULATION 110-2.
2	2528-8445110	TRAFFIC CONTROL REFER TO TABULATION 108-23, TRAFFIC CONTROL PLAN.
3	2533-4980005	MOBILIZATION - -
4	2599-9999005	REFER TO "V' SHEETS FOR DETAILS OF CONSTRUCTION. ANY ELECTRICAL CONDUIT OR ITS DEVICESIN CONFLICT WITH PROPOSED RUNWAY OR LADDER WILL BE MOVED BY OTHERS. METHOD OF MEASURMENT: THE ENGINER WILL COUNT THE NUMBER OF RETROFIT RUNWAY AND LADDER INSTALLED. BASIS OF PAYMENT: THE CONTRACTOR WILL BE PAID THE CONTRACT UNIT PRICE FOR EACH RETROFIT RUNWAY AND LADDER INSTALLED.

REMOVAL OF EXISTING STRUCTURES

110-2
10-13-72

Location	Description	Disposal
17TH	RUNWAY	
SERGEANT BLUFF	RUNWAY	

04-03-01 LINN COUNTY 203-2

During construction of this project, the contractor will be required to coordinate his operations with those of other contractors working within the same area. Other work in progress during the same period of the time will include construction of the following projects:

Project	Type of Work
IMN-380-6(248)0-0E-52	PCC Patching
NHSN-000-S(286)-2R-00	Traffic Signs
NHSN-000-S(289)-2R-00	Traffic Signs
MBIN-380-6(538)15-0M-57	Slope Protection
MPIN-380-6(705)0-0N-52	HMA Crack Sealing
IHSIPX-380-6(266)13-08-57	Cable Guardrail
CS-TSF-1187(718)-85-57	Traffic Signs

04-03-01 JOHNSON COUNTY 203-2

During construction of this project, the contractor will be required to coordinate his operations with those of other contractors working within the same area. Other work in progress during the same period of the time will include construction of the following projects:

Project	Type of Work
IMN-80-6(269)240-0E-52	PCC Patching
IM-80-6(249)240-13-52	Lighting
IMN-80-6(274)241-0E-52	Tower Lighting
IM-80-6(220)243-13-52	Grade and PCC Pave
IM-NHS-80-6(221)243-03-52	Grade and PCC Pave

ALUMINUM WELDING NOTES:

1) FABRICATION SHALL CONFORM TO SECTION 6.9 OF AASHTO 2001 STANDARD SPECIFICATIONS FOR STRUCTURAL SUPPORTS FOR HIGHWAY SIGNS, LUMINAIRES AND TRAFFIC SIGNALS, EXCEPT AS MODIFIED BY THE FOLLOWING NOTES.
2) ALL WELDING SHALL BE DONE BY GAS METAL-ARC WELDING (GMAW) PROCESS.
3) ONLY STRINGER BEAD TECHNIQUE SHALL BE USED IN WELDING. NO WEAVE BEAD TECHNIQUE IS ALLOWED.
4) INTERPASS TEMPERATURE SHALL NOT EXCEED 200°F.
5) TACK WELD ENDS SHALL BE FILLED AND NOT TERMINATE IN CRATERS. IF A TACK WELD IS CRACKED, THE CRACK SHALL BE REMOVED BEFORE WELDING BEGINS.
6) ALL INITIAL ROOT PASSES SHALL NOT EXCEED $\frac{5}{16}$ INCH AND MUST PENETRATE THE ROOT.
7) THE CONVEXITY OF FILLET WELD SHALL NOT EXCEED $\frac{1}{16}$ INCH.
8) THE ENTIRE STRUCTURE SHALL BE CLEANED BEFORE SHIPPING.
9) TUBES SHOULD BE MILLED TO THE REQUIRED RADII WITH THE MAXIMUM GAP AT ANY POINT NOT GREATER THAN $\frac{1}{16}$ INCH
10) ALL AREAS OF WELDING MUST BE BRUSHED WITH STAINLESS STEEL BRUSHES IMMEDIATELY PRIOR TO MAKING THE WELDS.
11) ONLY MICROSCOPICALLY CLEAN WELDING WIRES (THOSE WHICH HAVE BEEN SHAVED AFTER DRAWING) SHOULD BE USED AND SPOOLS OF WIRE REMAINING AT THE END OF THE DAY'S PRODUCTION SHOULD BE SEALED IN POLYETHYLENE BAGS. WIRE NOT SO PROTECTED SHOULD BE DISCARDED. THIS INCLUDES WIRE IN THE DRIVE ROLLS AND GUN.
12) FORCED FITS MUST BE AVOIDED AND ONLY DOWN HAND WELDING IS ALLOWED.
13) ALL WELD CRATERS MUST BE ELIMINATED AND WELDS SHOULD CARRY THROUGH TIGHT AREAS WITHOUT STOPPING WHEN POSSIBLE.
14) ALUMINUM FILLER ALLOY ER5356 OR ER5556 SHALL BE USED.

STAINLESS STEEL BOLTING NOTES:

UNLESS OTHERWISE NOTED ON THE PLAN, ALL STAINLESS STEEL U-BOLTS SHALL BE FURNISHED WITH STAINLESS STEEL REGULAR HEXAGONAL NUTS, JAM NUTS AND WASHERS UNDER NUTS.

STEEL NOTES:

ALL STEEL SECTIONS SHALL BE HOT DIPPED GALVANIZED AFTER FABRICATION IN ACCORDANCE WITH ASTM A123. PROVIDE VENT HOLES FOR GALVANIZING.

STEEL WELDING SHALL BE IN ACCORDANCE WITH THE CURRENT EDITION OF THE AWS SPECIFICATIONS D1.1, STRUCTURAL WELDING CODE-STEEL.

SPECIFICATIONS:

DESIGN: A.A.S.H.T.O. STANDARD SPECIFICATIONS FOR STRUCTURAL SUPPORTS FOR HIGHWAY SIGNS, LUMINAIRES AND TRAFFIC SIGNALS, SERIES OF 2009 WITH CURRENT INTERIMS; STATE STANDARD FATIGUE DESIGN.
CONSTRUCTION: IOWA D.O.T. STANDARD SPECIFICATIONS, SERIES 2009 PLUS APPLICABLE GENERAL SUPPLEMENTAL SPECIFICATIONS, DEVELOPMENTAL SPECIFICATIONS, SUPPLEMENTAL SPECIFICATIONS AND SPECIAL PROVISIONS SHALL APPLY TO CONSTRUCTION WORK ON THIS PROJECT.

GENERAL NOTES:

ALL SIGN TRUSSES ARE DESIGNED FOR 30 lb/ft^2 WIND PRESSURE ON TRUSS MEMBERS AND SIGN PANELS.

ALL ALUMINIUM SHAPES, BARS, AND PLATES FOR THE RUNWAY SHALL BE ALUMINUM ALLOY 6061-T6.

ALL STEEL SHAPES, BARS, AND PLATES SHALL COMPLY WITH ASTM A36 EXCEPT MINOR PARTS APPROVED BY THE ENGINEER MAY COMPLY WITH ASTM A575 GRADE M1020. STAINLESS STEEL BOLTS SHALL COMPLY WITH ASTM A-320 OR F593 AS PER STANDARD SPECIFICATIONS.

SHOP DRAWINGS SHALL BE SUBMITTED FOR REVIEW.

DESIGN STRESSES:

DESIGN STRESSES FOR MATERIALS ARE IN ACCORDANCE WITH A.A.S.H.T.O STANDARD SPECIFICATIONS FOR STRUCTURAL SUPPORTS FOR HIGHWAY SIGN, LUMINAIRES AND TRAFFIC SIGNALS, SERIES OF 2009 WITH CURRENT INTERIMS.

*** THE DIMENSION, 'END OF D.M.S. TO ℄ TRUSS SUPPORT' AND '℄ BOTTOM CHORD TO BOTTOM OF D.M.S.', SHALL BE FIELD VERIFIED PRIOR TO FABRICATION OF THE NEW RUNWAY. IF THE ACTUAL FIELD DIMENSION VARIES BY MORE THAN $\frac{1}{2}$", THE BRACKET SPACINGS SHOWN ON DESIGN SHEETS 4 AND 7 SHALL BE ADJUSTED ACCORDINGLY.**

COPIES OF THE ORIGINAL DESIGN PLANS AND SHOP DRAWINGS WILL BE AVAILABLE TO THE CONTRACTOR. CONTACT THE OFFICE OF CONTRACTS - HIGHWAY DIVISION - IOWA D.O.T. - AMES. DIMENSIONS SHOWN ON THESE PLANS ARE BASED ON ORIGINAL DESIGN PLANS. ORIGINAL PROJECT NUMBERS AND DESIGN NUMBERS ARE SHOWN ON THIS SHEET.

LOCATION	PROJECT NO.	EXISTING TRUSS LENGTH	STATION	ROUTE	COUNTY DESIGN NO.	END OF D.M.S. TO ℄ TRUSS SUPPORT *	℄ BOTTOM CHORD TO BOTTOM OF D.M.S. *
CORP. WOODS	IM-35-4(101)88--13-77	85'-0	3126+20	I-35 S.B.	4502 - POLK	26'-4	1'-2$\frac{1}{4}$
BROADWAY AVE.	STP-A-060-S(306)0--0A-00	21.0 M (68'-10$\frac{3}{4}$)	615+55	I-235 W.B.	4506 - POLK	22'-4	0'-11
EUCLID AVE.	STP-A-060-S(306)0--0A-00	21.0 M (68'-10$\frac{3}{4}$)	609+20	I-235 E.B.	4206 - POLK	21'-9	0'-10
17TH ST. WDM	STP-A-000-S(301)--22-00	22.5 M (73'-9$\frac{13}{16}$)	1047+36.5	I-235 W.B.	9205 - POLK	33'-8	0'-9
12TH	STP-A-000-S(330)--22-00	70'-0	802+00	I-80 W.B.	JOHNSON	24'-6	0'-10
SERGEANT BLUFF	STP-A-000-S(301)--22-00	60'-0	155+00	I-29 N.B.	1405 - WOODBURY	18'-5	0'-9
WILSON AVE.	ITS-380-6(258)--25-57	75'-0	249+25	I-380 S.B.	509 - LINN	23'-3	0'-8
NEWTON	STP-A-080-5(271)163--0A-50	70'-0	2425+50	I-80 E.B.	208 - JASPER	17'-7$\frac{1}{2}$	1'-3$\frac{1}{2}$
MADISON AVE.	STP-A-000-S(345)--22-00	70'-0	1034+00	I-80 W.B.	1308 - POTTAWATTAMIE	18'-2	1'-3$\frac{1}{4}$
RAILROAD	STP-A-000-S(345)--22-00	70'-0	221+50	I-29 S.B.	1208 - POTTAWATTAMIE	23'-3	1'-3$\frac{1}{4}$

STRUCTURAL DESIGN

LICENSED PROFESSIONAL ENGINEER James R. Hauber 18418 IOWA

I hereby certify that this engineering document was prepared by me or under my direct personal supervision and that I am a duly licensed Professional Engineer under the laws of the State of Iowa.

Signature: James Hauber Date: 1-22-2010

Printed or Typed Name: James R. Hauber

My license renewal date is December 31, 2010

Pages or sheets covered by this seal: SHEETS V.1 THRU V.9

DESIGN FOR

RUNWAY RETROFITS FOR OVERHEAD SIGN TRUSSES FOR D.M.S.

GENERAL NOTES

STATEWIDE

FEBRUARY, 2010

IOWA DEPARTMENT OF TRANSPORTATION - HIGHWAY DIVISION

DESIGN SHEET NO. 1 OF 9 FILE NO. _____ DESIGN NO. SEE CHART

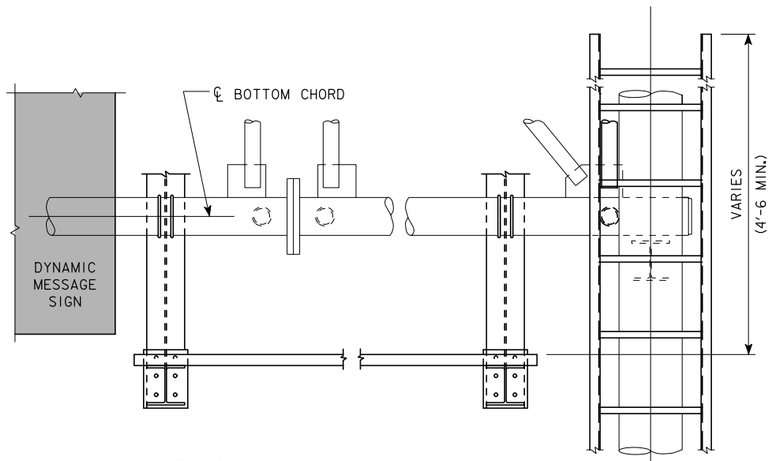

PART ELEVATION VIEW
(HANDRAIL NOT SHOWN)

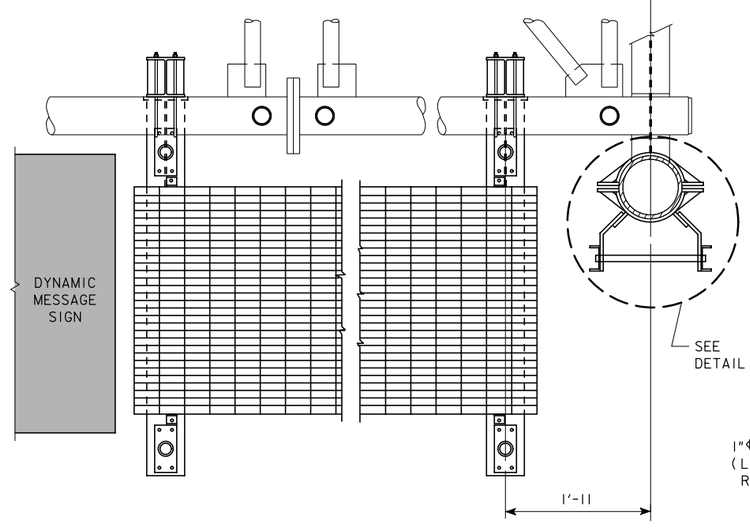

PART PLAN VIEW
(HANDRAIL NOT SHOWN)

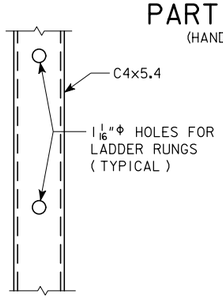

VIEW M-M

LOCATION	SUPPORT DIAMETER O.D.
CORP. WOODS	10.00
BROADWAY AVE.	10.75
EUCLID AVE.	10.75
17TH ST. WDM	10.75
SERGEANT BLUFF	10.75
MADISON AVE.	10.75
RAILROAD	10.75
12TH	10.75
WILSON AVE.	10.75
NEWTON	10.75

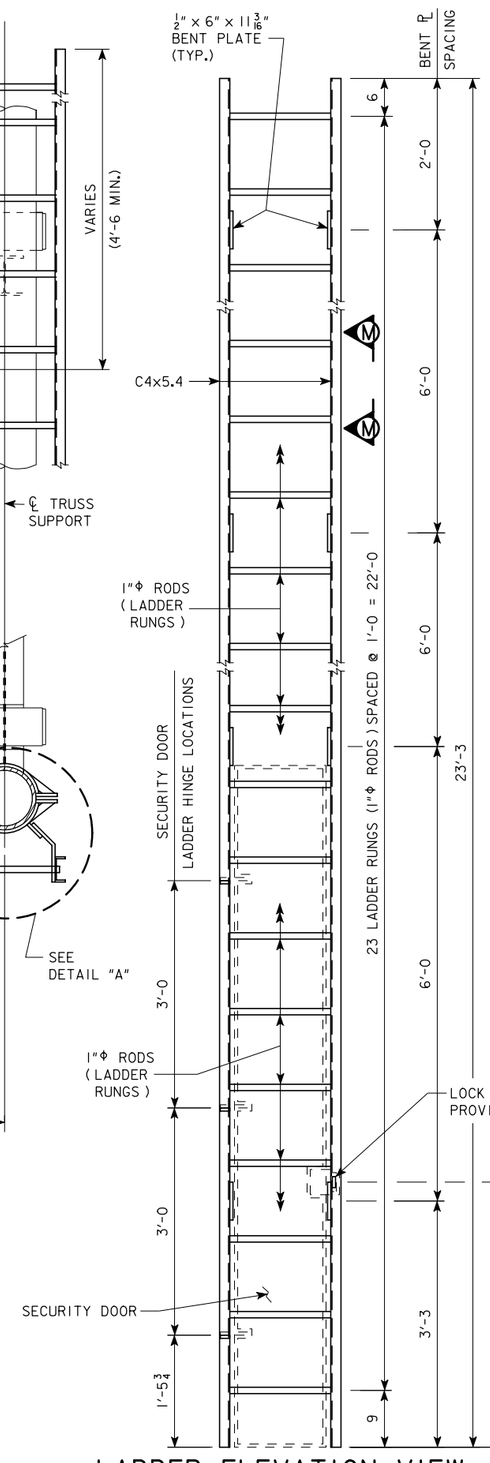

LADDER ELEVATION VIEW
(CLAMP ASSEMBLY NOT SHOWN)

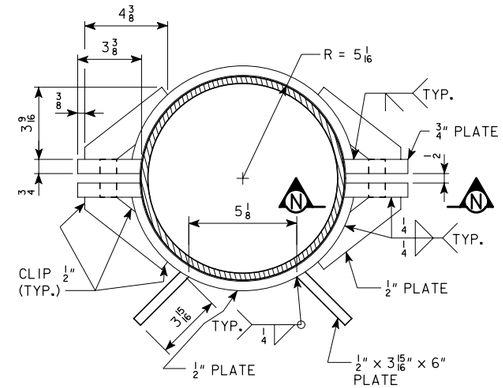

CLAMP ASSEMBLY
(4 REQUIRED PER LADDER)
10.00" O.D. SUPPORT POST

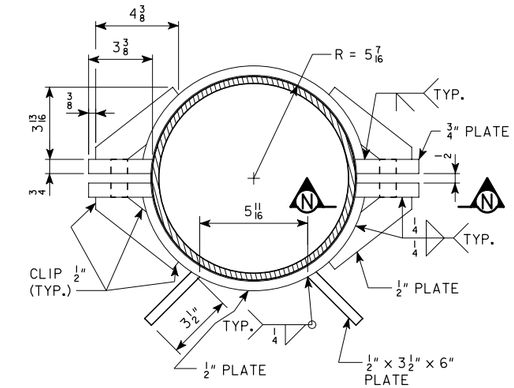

CLAMP ASSEMBLY
(4 REQUIRED PER LADDER)
10.75" O.D. SUPPORT POST

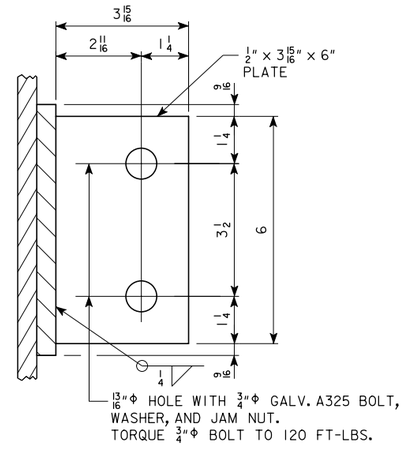

SECTION P-P
10.00" O.D. SUPPORT POST

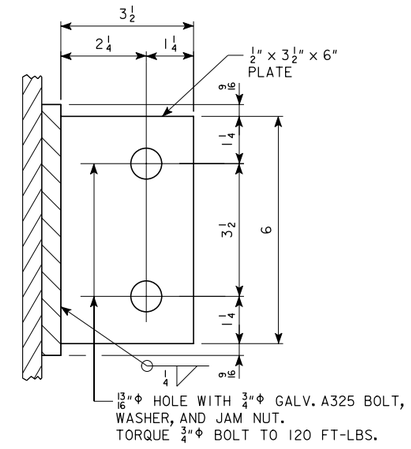

SECTION P-P
10.75" O.D. SUPPORT POST

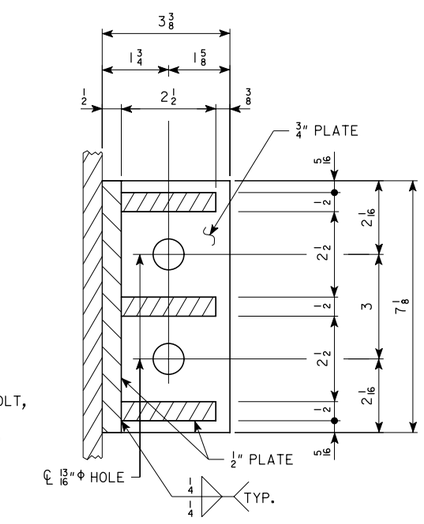

SECTION N-N
10.00" AND 10.75" O.D. SUPPORT POST

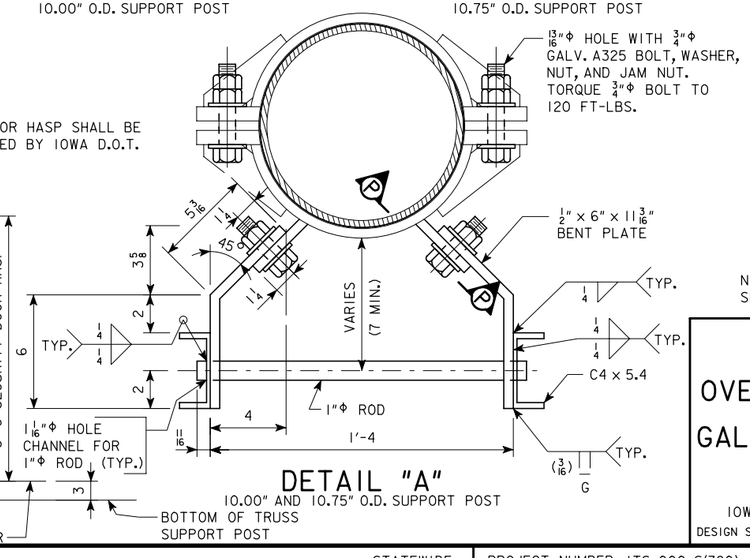

DETAIL "A"
10.00" AND 10.75" O.D. SUPPORT POST

NOTE: SEE DESIGN SHEET V.3 FOR SECURITY DOOR DETAILS.

DESIGN FOR

RUNWAY RETROFITS FOR OVERHEAD SIGN TRUSSES FOR D.M.S.

GALVANIZED STEEL LADDER DETAILS

FEBRUARY, 2010

STATEWIDE

IOWA DEPARTMENT OF TRANSPORTATION - HIGHWAY DIVISION

DESIGN SHEET NO. 2 OF 9 FILE NO. _____ DESIGN NO. SEE CHART

DESIGN TEAM JRH / JDC / HLA | STATEWIDE | PROJECT NUMBER ITS-000-S(380)--25-00 | SHEET NUMBER V.2

1/29/2010 8:01:45 AM jcolle W:\Projects\0000001009\BRFinal\00000S380.brg 971109s002 11x17bw_pdf.plt

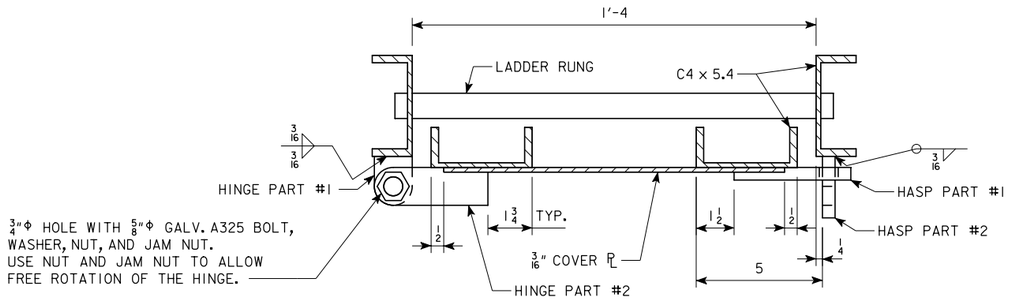

SECTION A-A

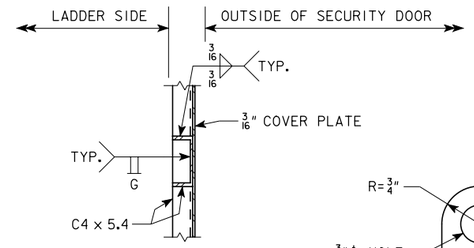

SECTION B-B

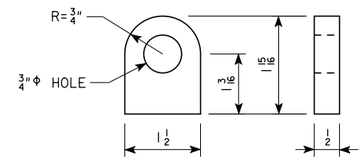

HINGE PART #1

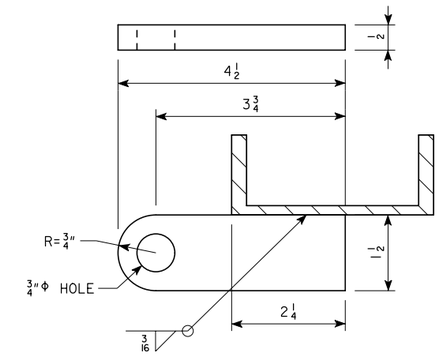

HINGE PART #2

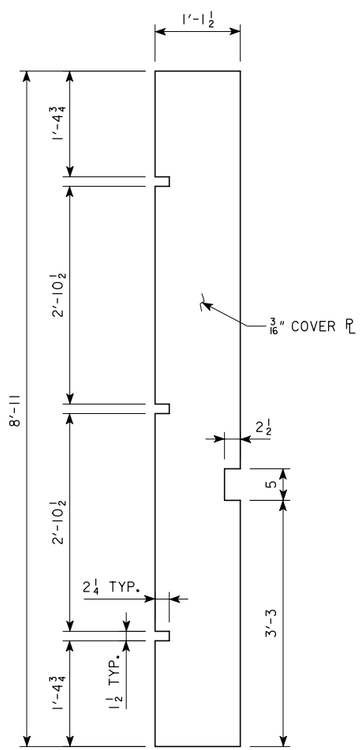

3/16" COVER PL DETAIL

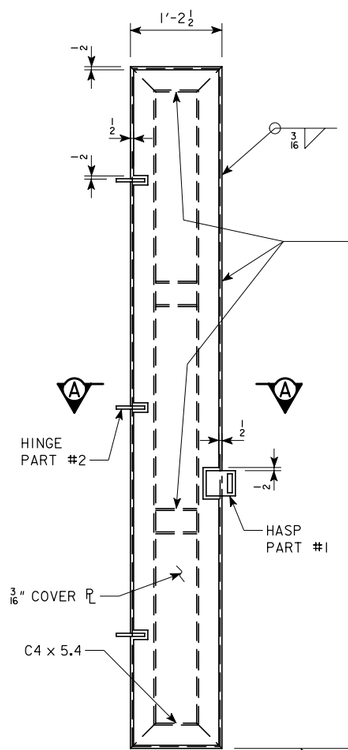

SECURITY DOOR ELEV.
(FRONT SIDE OF DOOR)

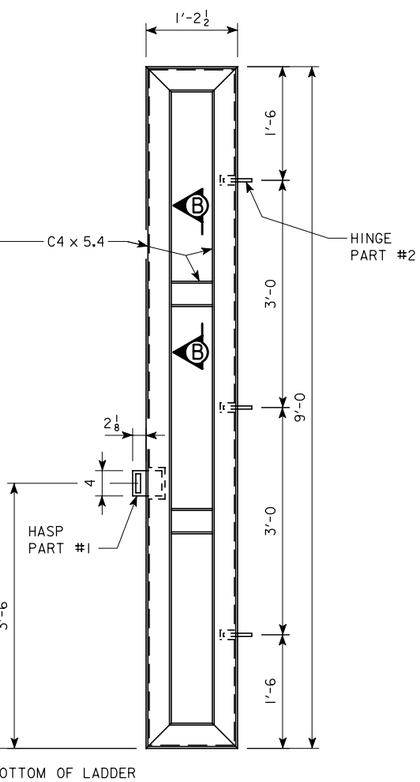

SECURITY DOOR ELEV.
BACK (LADDER) SIDE OF DOOR

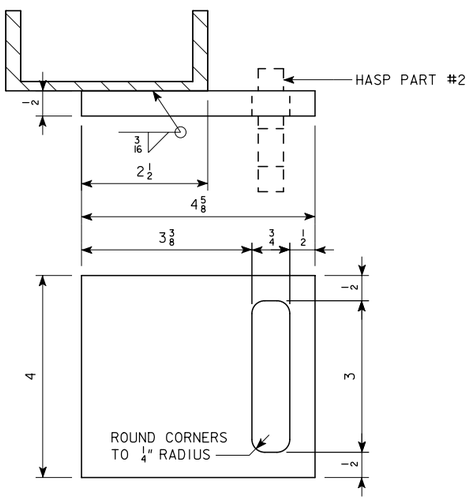

HASP PART #1

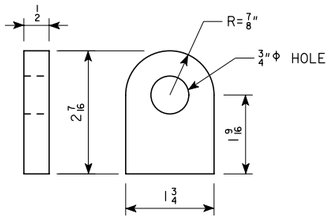

HASP PART #2

LOCATION
CORP. WOODS
BROADWAY AVE.
EUCLID AVE.
17TH ST. WDM
12TH
SERGEANT BLUFF
WILSON AVE.
NEWTON
MADISON AVE.
RAILROAD

DESIGN FOR

RUNWAY RETROFITS FOR OVERHEAD SIGN TRUSSES FOR D.M.S. GALVANIZED STEEL LADDER SECURITY DOOR DETAILS

FEBRUARY, 2010

STATEWIDE

IOWA DEPARTMENT OF TRANSPORTATION - HIGHWAY DIVISION

DESIGN SHEET NO. 3 OF 9 FILE NO. _____ DESIGN NO. SEE CHART

DESIGN TEAM JRH / JDC / HLA | STATEWIDE | PROJECT NUMBER ITS-000-S(380)--25-00 | SHEET NUMBER V.3

1/29/2010 8:01:46 AM jcolle W:\Projects\0000001009\BRFinal\00000S380.brg 971109s003 11x17bw_pdf.plt

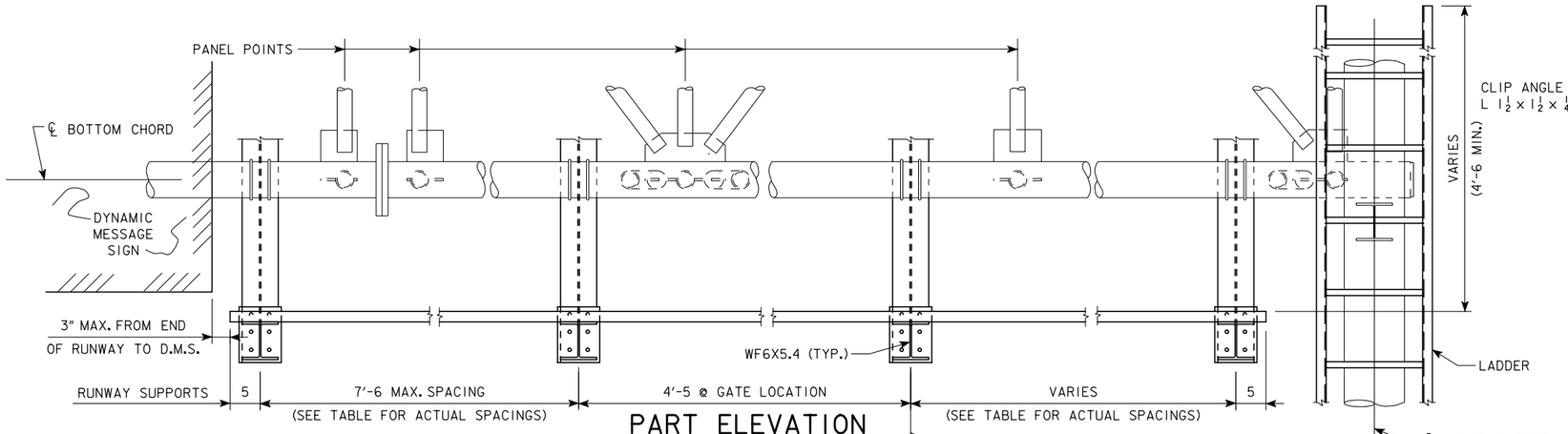

PART ELEVATION

LOOKING IN DIRECTION OF TRAFFIC
(HANDRAIL NOT SHOWN)

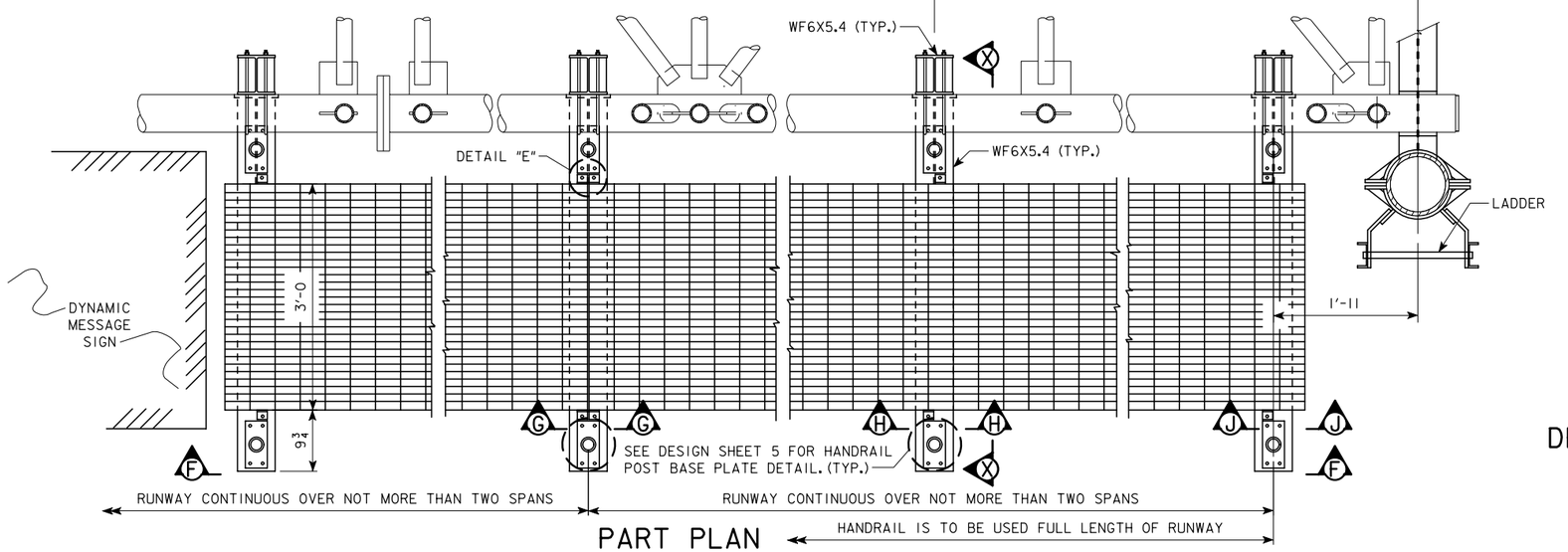

PART PLAN

(HANDRAIL NOT SHOWN)

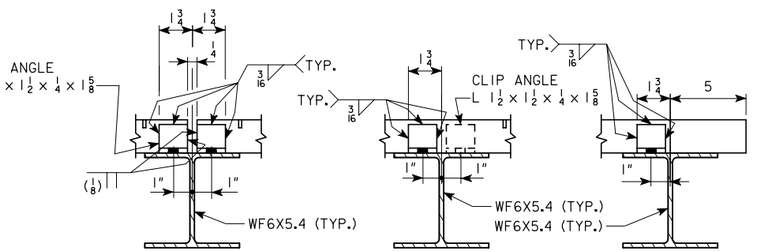

SECTION G-G SECTION H-H SECTION J-J

NOTE:
7/16"Φ HOLE IN CLIP ANGLE AND 7/16"Φ HOLE IN WF6X5.4 FOR 3/8"Φ GALVANIZED A325 BOLT. ADJUST CLIP SO GRATING BEARS ON BEAM.

NOTE:
THE FOLLOWING ALUMINUM ALLOYS ARE TO BE USED IN THE FABRICATION OF RUNWAY GRATING AND HANDRAIL:
- RUNWAY GRATING:
  - BEARING BARS - 6061-T6
  - CROSS BARS - 6063-T5 OR 6061-T6
- HANDRAILS:
  - 2 1/2"Φ TUBE - 6061-T6

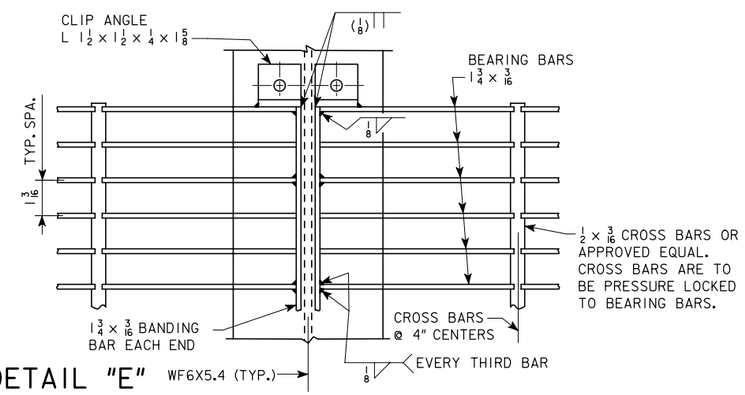

DETAIL "E"

LOCATION	BRACKETS REQUIRED	BRACKET SPACING					TOTAL BRACKET SPACING
		A	B	C	D	E	
CORP. WOODS	6	2'-11	4'-5*	5'-0	5'-0	5'-0	22'-4
BROADWAY AVE.	5	N.A.	4'-0	7'-6	4'-5*	4'-0	19'-11
EUCLID AVE.	5	N.A.	3'-5	7'-6	4'-5*	4'-0	19'-4
17TH ST. WDM	6	2'-10	7'-6	4'-5*	6'-0	3'-0	31'-3
SERGEANT BLUFF	5	N.A.	1'-7	4'-5*	5'-0	5'-0	16'-0
12TH	6	2'-8	5'-0	5'-0	4'-5*	5'-0	22'-1

* - 4'-5 DIMENSION CORRESPONDS TO BAY SPACING FOR GATE

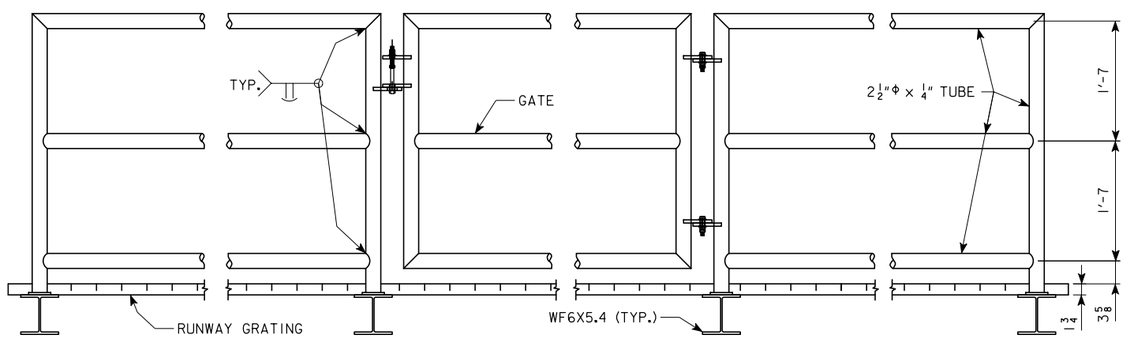

VIEW F-F

(SHOWING HANDRAIL & GATE DETAILS)
(GATE IS LOCATED ON SIDE FARTHEST FROM TRUSS ONLY)

NOTES:
SEE DESIGN SHEET 3 FOR LADDER DETAILS.
SEE DESIGN SHEET 5 FOR SECTION X-X.

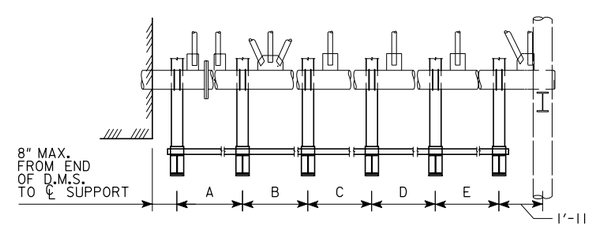

DESIGN FOR

RUNWAY RETROFITS FOR OVERHEAD SIGN TRUSSES FOR D.M.S.

ALUMINUM RUNWAY DETAILS

FEBRUARY, 2010

STATEWIDE

IOWA DEPARTMENT OF TRANSPORTATION - HIGHWAY DIVISION

DESIGN SHEET NO. 4 OF 9 FILE NO. _____ DESIGN NO. SEE CHART

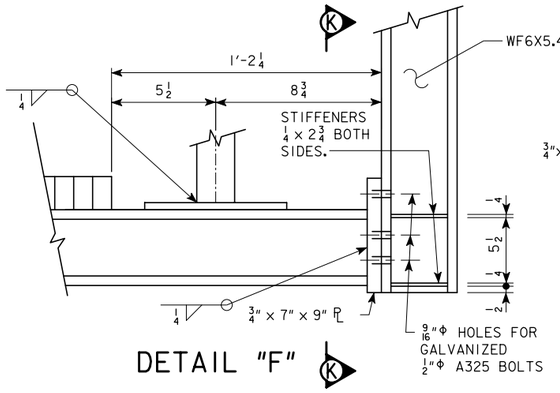

DETAIL "F"

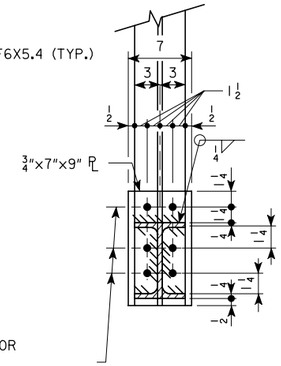

SECTION K-K

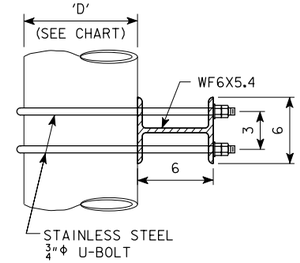

SECTION L-L

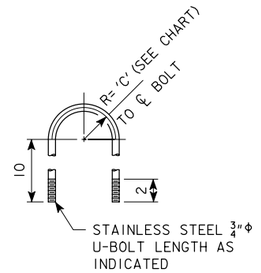

STAINLESS STEEL U-BOLT DETAIL

ARCH TOP TRUSS ONLY

THE HOLES FOR THE TOP U-BOLT SHALL BE FIELD DRILLED TO MATCH TRUSS SUPPORT IN ORDER TO ACCOUNT FOR THE ARCH TOP STRUCTURE.

THE TOP TWO STIFFENERS SHALL BE OMITTED ON THE ARCH TOP TRUSS ONLY. BROADWAY, EUCLID, AND 17TH WDM ARE ARCH TRUSS LOCATIONS.

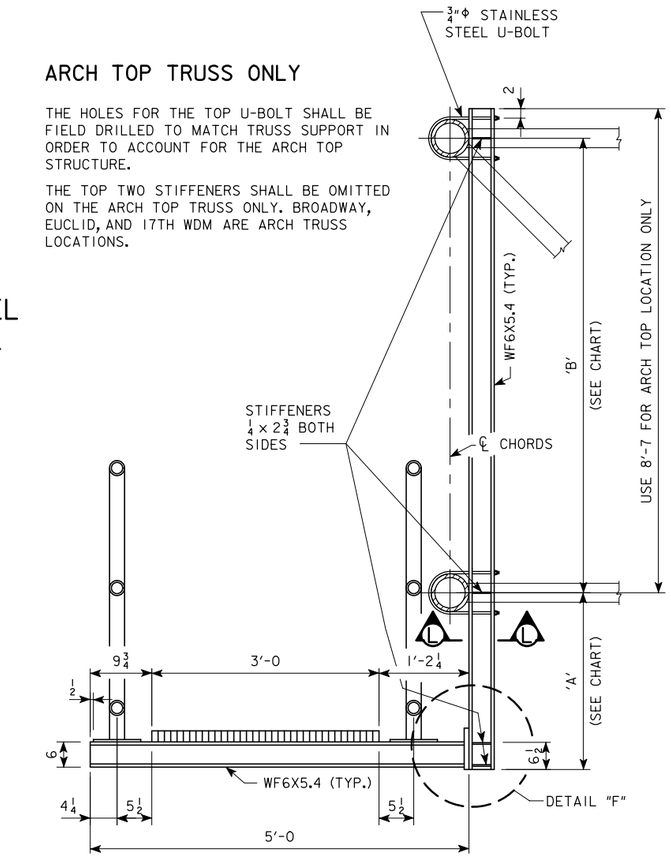

SECTION X-X
TYPICAL RUNWAY SECTION

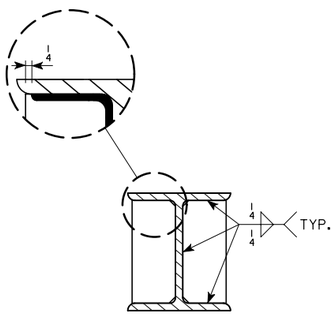

TYPICAL STIFFENER DETAIL

LOCATION	'A'	'B' CHORD SPACING	'C' U-BOLT RADIUS	'D' CHORD DIA.
CORP. WOODS	1'-11 1/2	6'-0	3 5/32"	5 1/2"
BROADWAY AVE.	1'-8 1/4	VARIES 6'-0 TO 7'-8	3 13/32"	6"
EUCLID AVE.	1'-7 1/4	VARIES 6'-0 TO 8'-0	3 13/32"	6"
17TH ST. WDM	1'-6 1/4	VARIES 6'-0 TO 8'-0	3 13/32"	6"
SERGEANT BLUFF	1'-6 1/4	6'-0	3 13/32"	6"
12TH	1'-7 1/4	6'-0	3 13/32"	6"

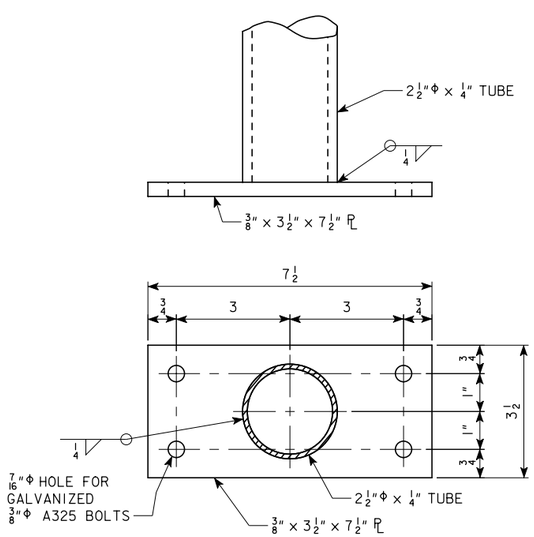

HANDRAIL POST BASE PLATE

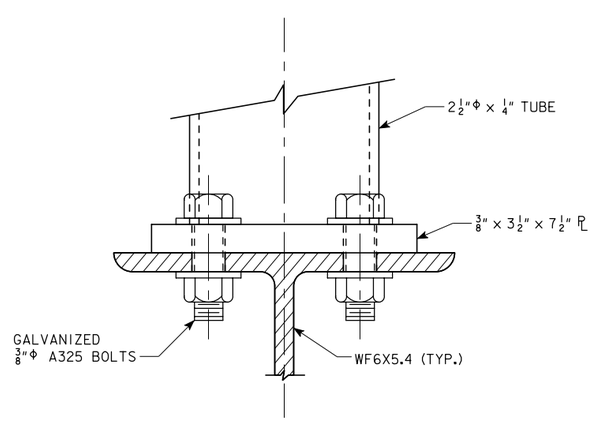

END ELEVATION OF HANDRAIL POST BASE

DESIGN FOR

RUNWAY RETROFITS FOR OVERHEAD SIGN TRUSSES FOR D.M.S.

ALUMINUM RUNWAY DETAILS

FEBRUARY, 2010

STATEWIDE

IOWA DEPARTMENT OF TRANSPORTATION - HIGHWAY DIVISION

DESIGN SHEET NO. 5 OF 9 FILE NO. _____ DESIGN NO. SEE CHART

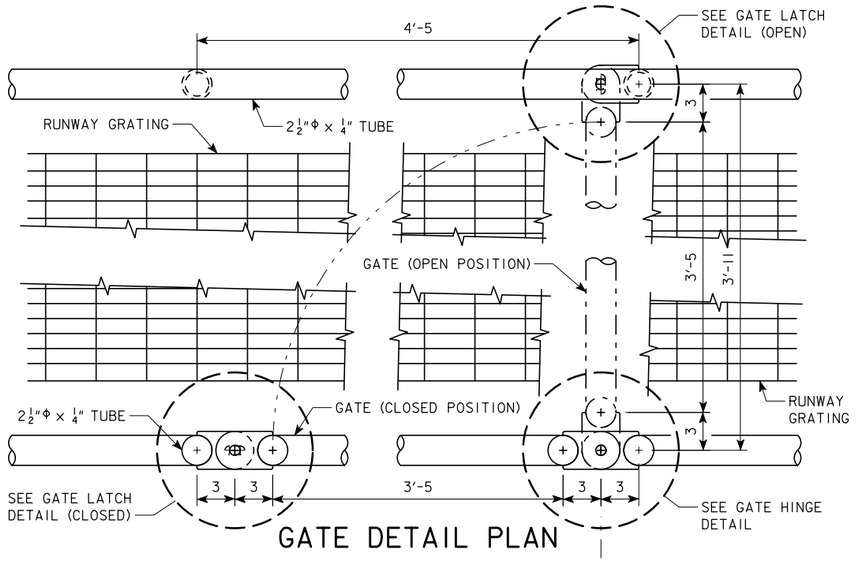

GATE DETAIL PLAN

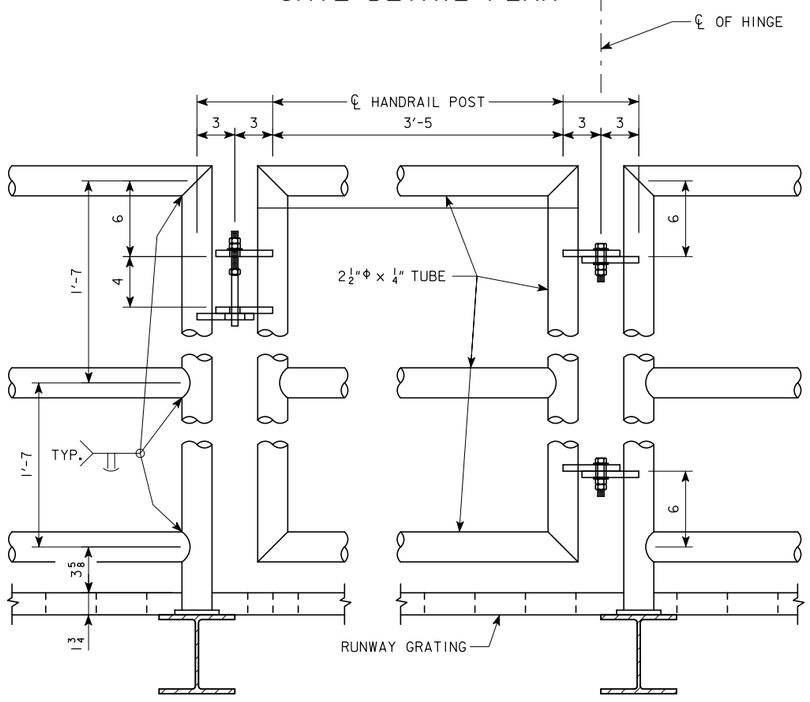

GATE DETAIL ELEVATION

GATE LOCATED OVER SHOULDER OF ROADWAY

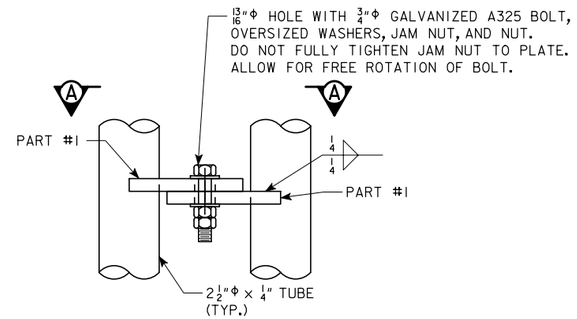

GATE HINGE DETAIL

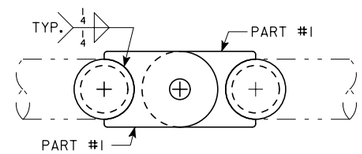

VIEW A-A

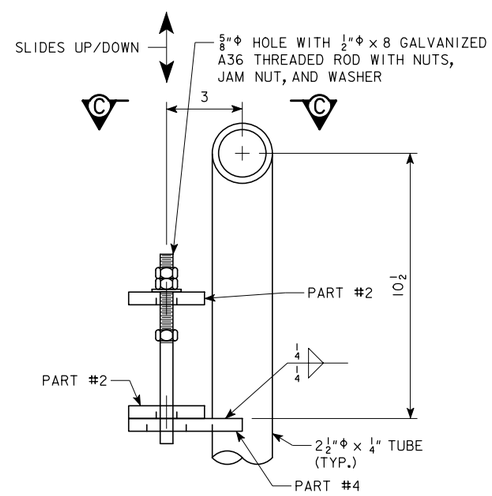

GATE LATCH DETAIL (OPEN)

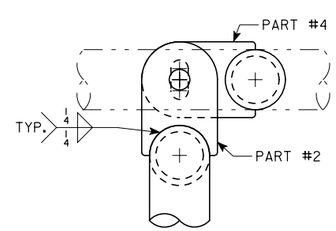

VIEW C-C

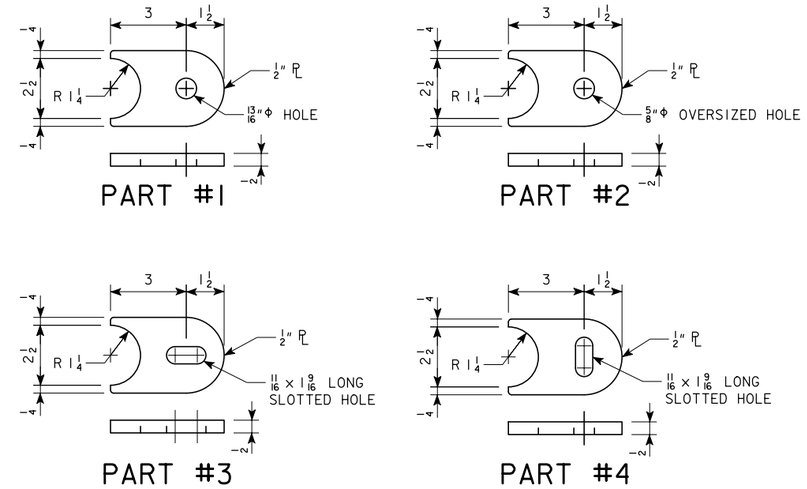

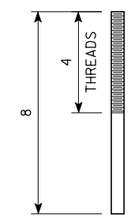

1/2"Φ A36 ROD GALVANIZED

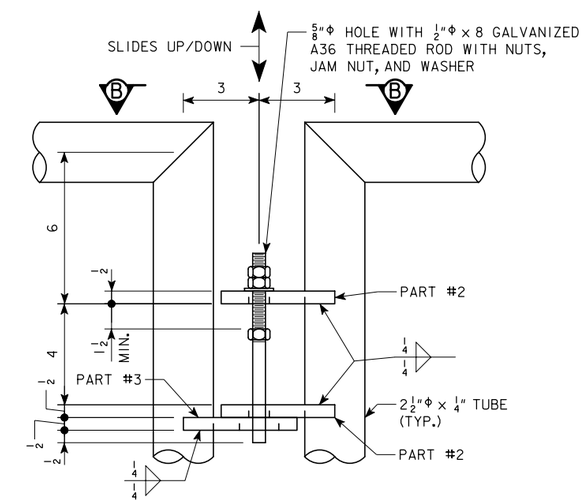

GATE LATCH DETAIL (CLOSED)

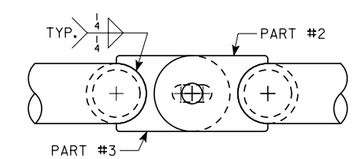

VIEW B-B

LOCATION
CORP. WOODS
BROADWAY AVE.
EUCLID AVE.
17TH ST. WDM
SERGEANT BLUFF
12TH

DESIGN FOR

RUNWAY RETROFITS FOR OVERHEAD SIGN TRUSSES FOR D.M.S.

ALUMINUM RUNWAY GATE DETAILS

FEBRUARY, 2010

STATEWIDE

IOWA DEPARTMENT OF TRANSPORTATION - HIGHWAY DIVISION

DESIGN SHEET NO. 6 OF 9 FILE NO. _____ DESIGN NO. SEE CHART

DESIGN TEAM JRH / JDC / HLA	STATEWIDE	PROJECT NUMBER ITS-000-S(380)--25-00	SHEET NUMBER V.6

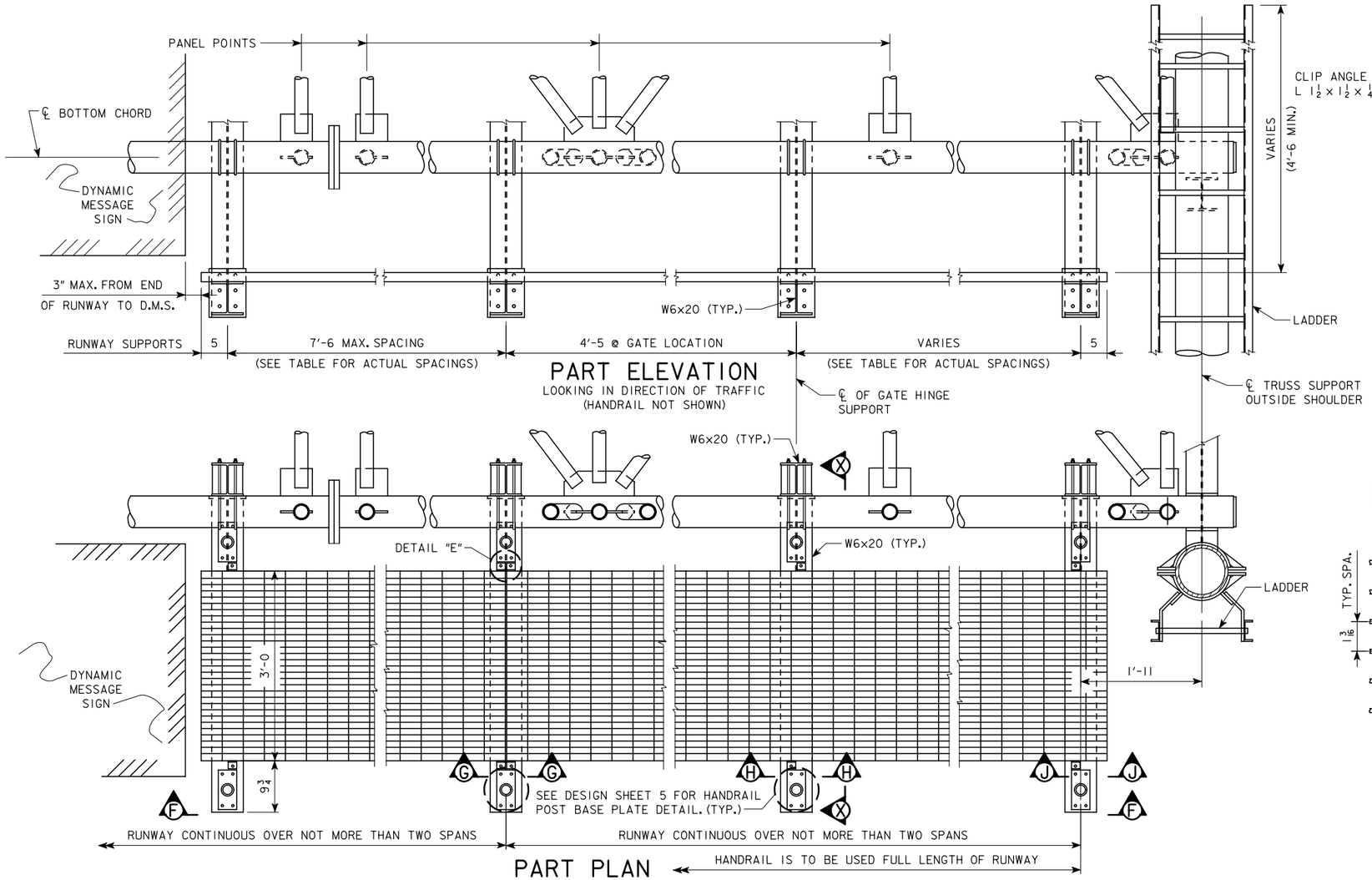

PART ELEVATION

LOOKING IN DIRECTION OF TRAFFIC
(HANDRAIL NOT SHOWN)

PART PLAN

(HANDRAIL NOT SHOWN)

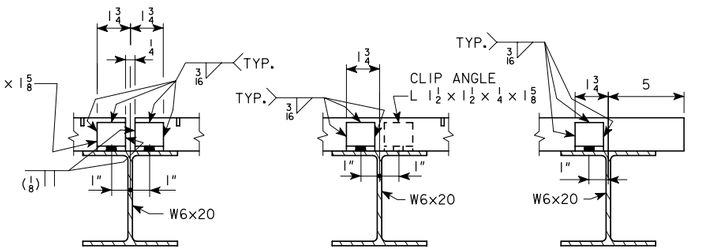

SECTION G-G SECTION H-H SECTION J-J

NOTE:
7/16"Φ HOLE IN CLIP ANGLE AND 7/16"Φ HOLE IN W6x20 FOR 3/8"Φ GALVANIZED A325 BOLT. ADJUST CLIP SO GRATING BEARS ON BEAM.

NOTE:
THE GALVANIZED METAL BAR GRATING INCLUDING BEARING BAR, CROSS BARS, AND BANDING BARS SHALL COMPLY WITH THE REQUIREMENTS OF ASTM A1011 TYPE 2.

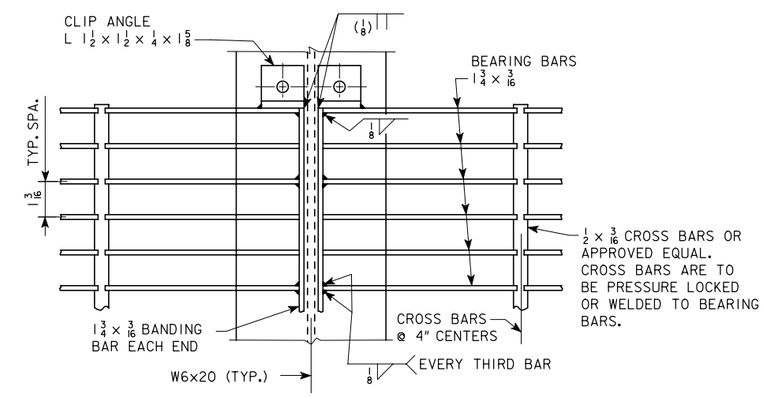

DETAIL "E"

LOCATION	BRACKETS REQUIRED	BRACKET SPACING A	B	C	D	TOTAL BRACKET SPACING
MADISON AVE.	4	N.A.	5'-4	4'-5 *	6'-0	15'-9
RAILROAD	5	4'-11 1/2	4'-11 1/2	4'-5 *	6'-6	20'-10
WILSON AVE.	5	5'-5	5'-0	4'-5 *	6'-0	20'-10
NEWTON	4	N.A.	4'-9 1/2	4'-5 *	6'-0	15'-2 1/2

* - 4'-5 DIMENSION CORRESPONDS TO BAY SPACING FOR GATE

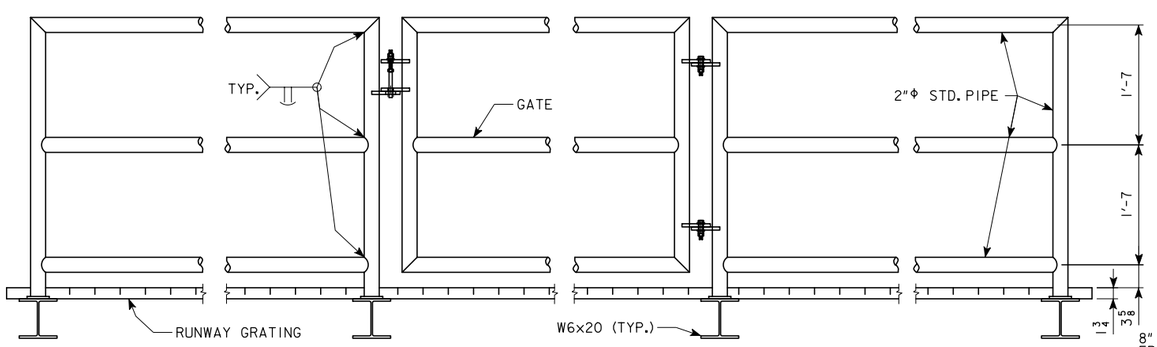

VIEW F-F

(SHOWING HANDRAIL & GATE DETAILS)
(GATE IS LOCATED ON SIDE FARTHEST FROM TRUSS ONLY)

NOTES:
SEE DESIGN SHEET 3 FOR LADDER DETAILS.
SEE DESIGN SHEET 8 FOR SECTION X-X.

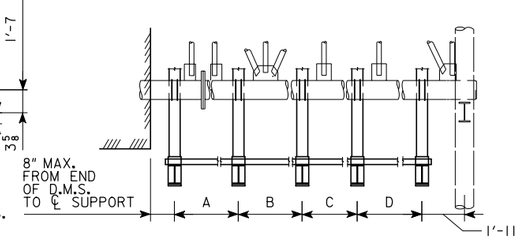

DESIGN FOR

RUNWAY RETROFITS FOR OVERHEAD SIGN TRUSSES FOR D.M.S.

GALVANIZED STEEL RUNWAY DETAILS

FEBRUARY, 2010

STATEWIDE

IOWA DEPARTMENT OF TRANSPORTATION - HIGHWAY DIVISION

DESIGN SHEET NO. 7 OF 9 FILE NO. _____ DESIGN NO. SEE CHART

DESIGN TEAM JRH / JDC / HLA | STATEWIDE | PROJECT NUMBER ITS-000-S(380)--25-00 | SHEET NUMBER V.7

1/29/2010 8:01:51 AM jcolle W:\Projects\0000001009\BRFinal\00000S380.brg 971109s007 11x17bw_pdf.plt

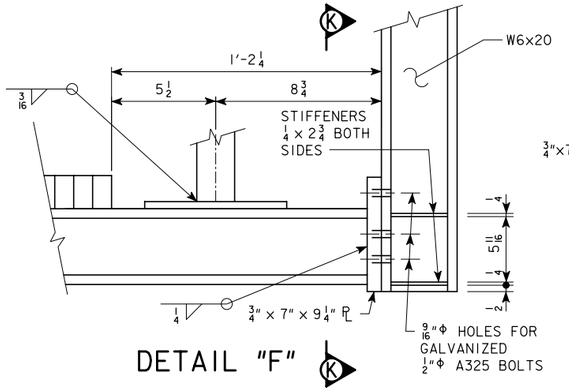

DETAIL "F"

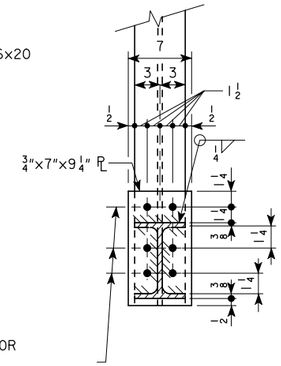

SECTION K-K

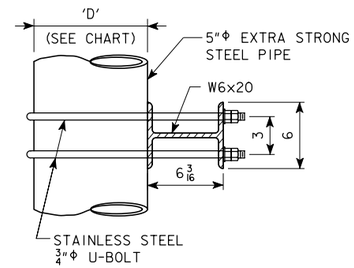

SECTION L-L

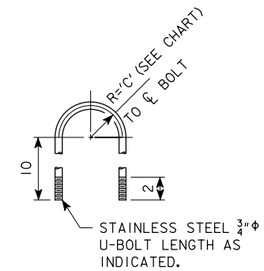

STAINLESS STEEL U-BOLT DETAIL

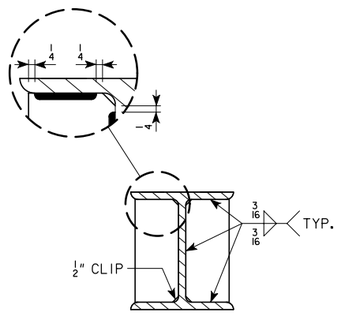

TYPICAL STIFFENER DETAIL

LOCATION	'A'	'B' CHORD SPACING	'C' U-BOLT RADIUS	'D' CHORD DIA.
MADISON AVE.	2'-0 11/16	6'-0	3 3/16"	5 9/16"
RAILROAD	2'-0 11/16	6'-0	3 3/16"	5 9/16"
WILSON AVE.	1'-5 7/16	6'-0	3 3/16"	5 9/16"
NEWTON	2'-0 15/16	6'-0	3 3/16"	5 9/16"

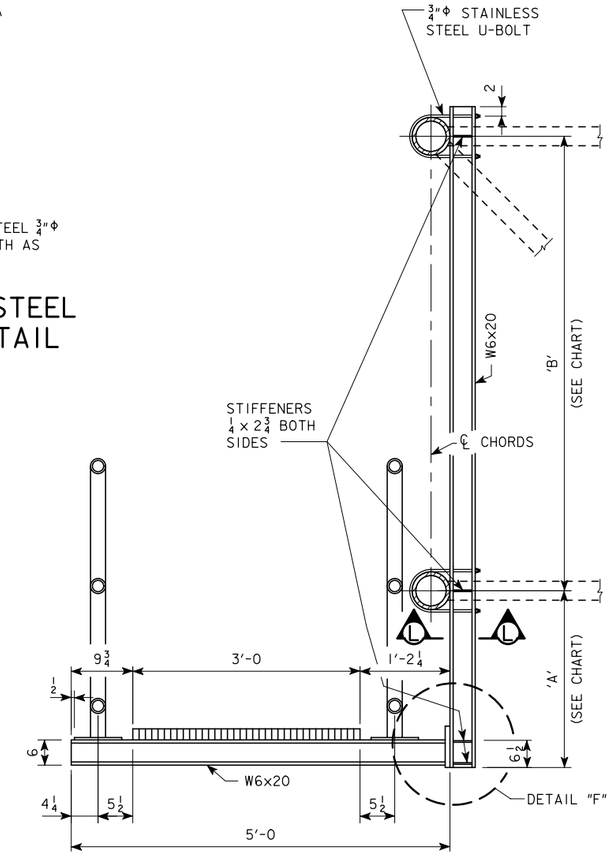

SECTION X-X
TYPICAL RUNWAY SECTION

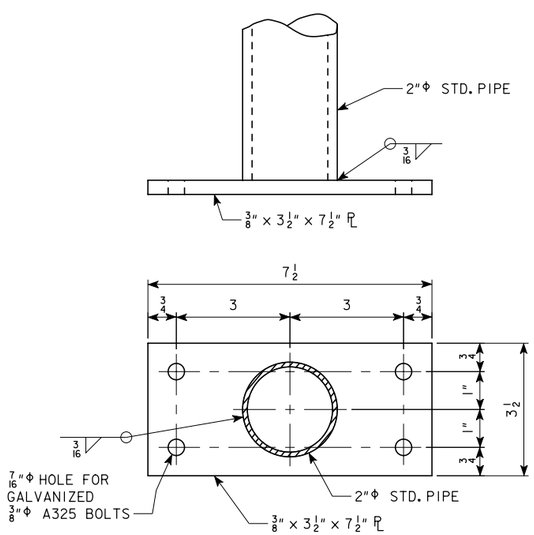

HANDRAIL POST BASE PLATE

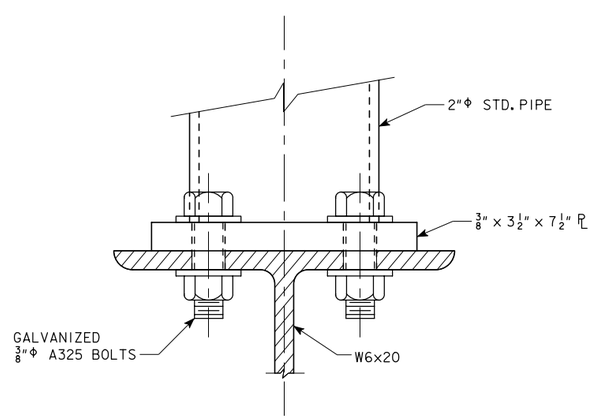

END ELEVATION OF HANDRAIL POST BASE

DESIGN FOR

RUNWAY RETROFITS FOR OVERHEAD SIGN TRUSSES FOR D.M.S.

GALVANIZED STEEL RUNWAY DETAILS

FEBRUARY, 2010

STATEWIDE

IOWA DEPARTMENT OF TRANSPORTATION - HIGHWAY DIVISION

DESIGN SHEET NO. 8 OF 9 FILE NO. _____ DESIGN NO. SEE CHART

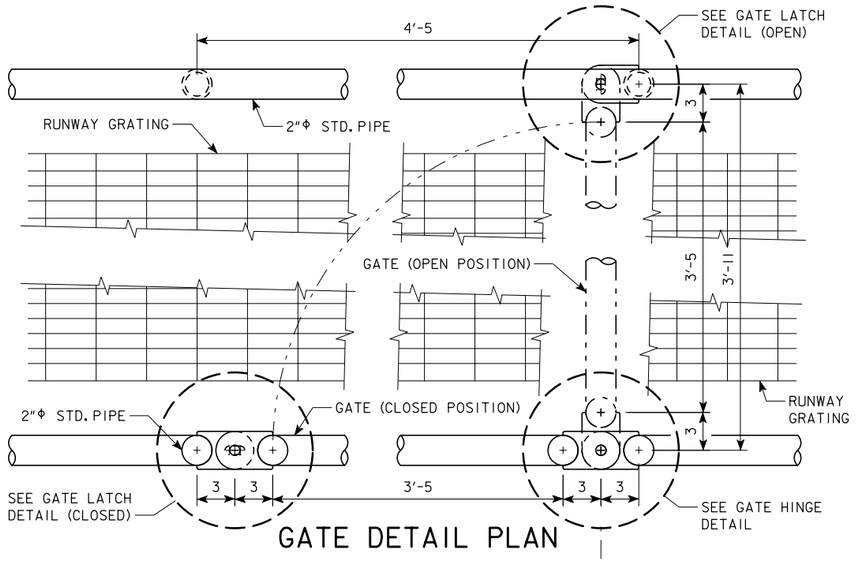

GATE DETAIL PLAN

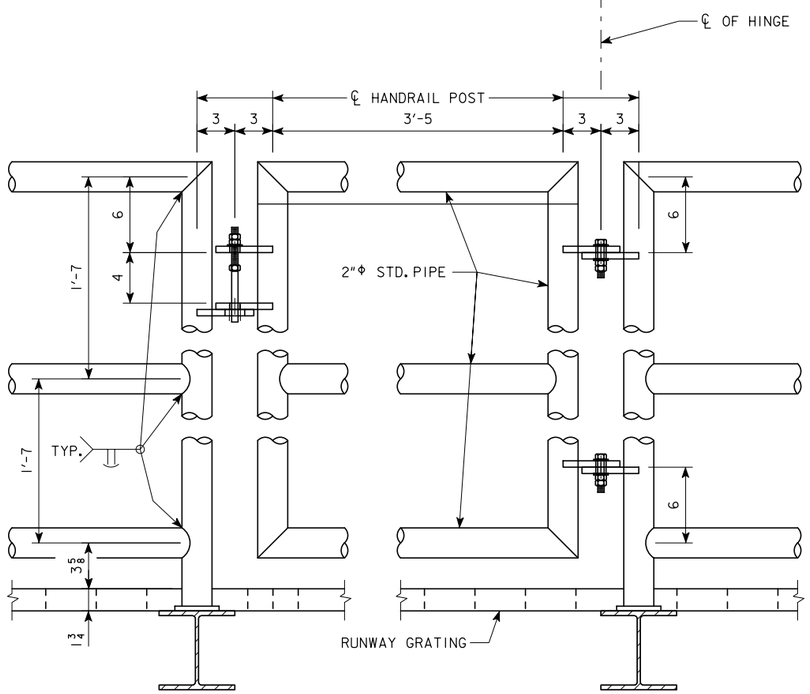

GATE DETAIL ELEVATION

GATE LOCATED OVER SHOULDER OF ROADWAY

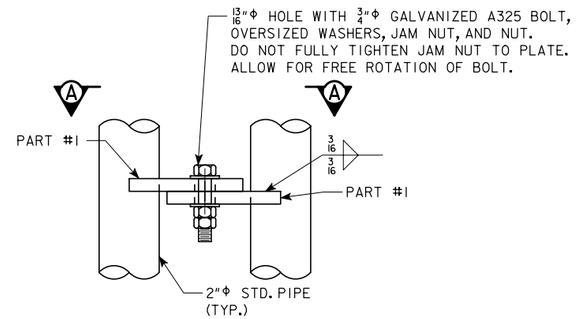

GATE HINGE DETAIL

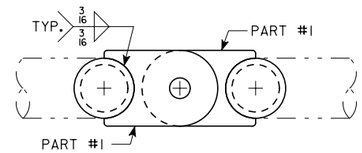

VIEW A-A

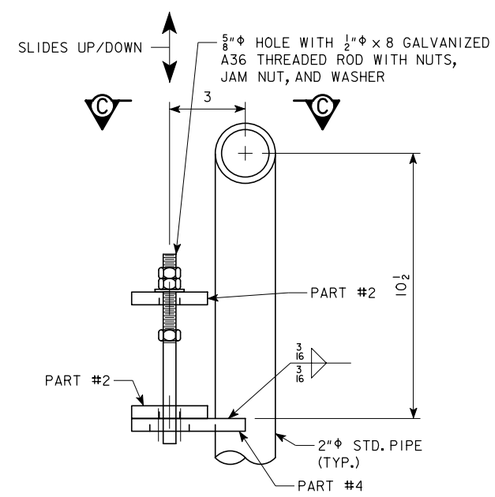

GATE LATCH DETAIL (OPEN)

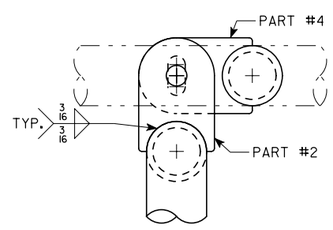

VIEW C-C

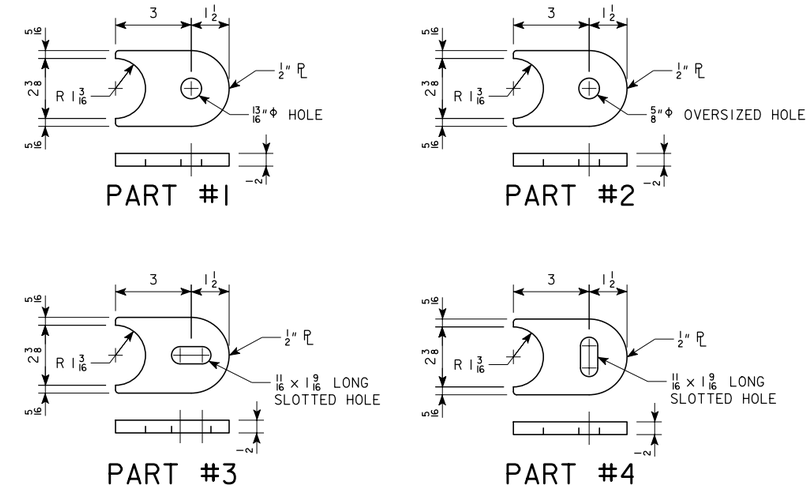

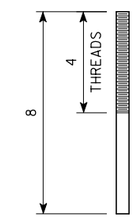

1/2"Φ A36 ROD GALVANIZED

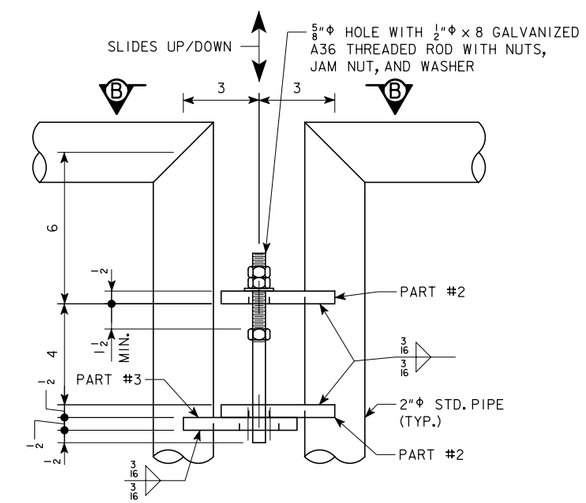

GATE LATCH DETAIL (CLOSED)

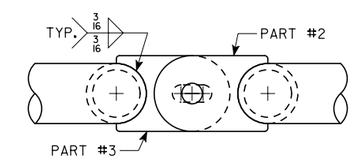

VIEW B-B

LOCATION
MADISON AVE.
RAILROAD
WILSON AVE.
NEWTON

DESIGN FOR

RUNWAY RETROFITS FOR OVERHEAD SIGN TRUSSES FOR D.M.S. GALVANIZED STEEL RUNWAY GATE DETAILS

FEBRUARY, 2010

STATEWIDE

IOWA DEPARTMENT OF TRANSPORTATION - HIGHWAY DIVISION

DESIGN SHEET NO. 9 OF 9 FILE NO. _____ DESIGN NO. SEE CHART

DESIGN TEAM JRH / JDC / HLA	STATEWIDE	PROJECT NUMBER ITS-000-S(380)--25-00	SHEET NUMBER V.9