DYNAMIC MESSAGE SIGNS
STP-A-000-S(330)--22-00

LETTING DATE 3-20-07

STATEWIDE

STANDARD ROAD PLANS

105-4
12-03-96

The following Standard Road Plans shall be considered applicable to construction work on this project.

Number	Date	Number	Date	Number	Date
RD-21A	4/19/2005	RD-42	4/15/2003	RM-38	4/27/1999
RD-21B	4/19/2005	RD-43	10/17/2006		
RD-22A	9/21/1999	RD-44	4/15/2003	TC-1	10/17/2006
RD-23	10/17/2006	RD-45	10/17/2006	TC-402	10/17/2006
RD-24	9/21/1999			TC-418	10/17/2006
RD-25	4/15/2003	RE-71	10/17/2006	TC-420	10/17/2006
RD-31	4/15/2003			TC-451	10/17/2006

STANDARD BRIDGE PLANS

The following Standard Bridge Plans shall be considered applicable to construction work on this project.

Number	Date	Number	Date	Number	Date
STOH-01-06	04-06	STOH-06-06	09-06	STOH-11-06	04-06
STOH-02-06	04-06	STOH-07-06	09-06	STOH-12-06	04-06
STOH-03-06	09-06	STOH-08-06	04-06	STOH-13-06	04-06
STOH-04-06	09-06	STOH-09-06	04-06	STOH-14-06	04-06
STOH-05-06	04-06	STOH-10-06	04-06	STOH-15-06	04-06

Iowa Department of Transportation

Highway Division

PLANS OF PROPOSED IMPROVEMENT ON THE

INTERSTATE ROAD SYSTEM

STATEWIDE
DYNAMIC MESSAGE SIGNS

Various Locations

SCALES: As Noted

The Iowa Department of Transportation Standard Specifications for Highway and Bridge Construction, Series 2001, plus applicable General Supplemental Specifications, Developmental Specifications, Supplemental Specifications and Special Provisions, shall apply to construction work on this project.

Value Engineering Saves. Refer to Article 1105.15 of the Specifications.

NO MILEAGE SUMMARY

IOWA ONE CALL
800 /292-8989
TOLL FREE
CALL - BEFORE - YOU - DIG

REVISIONS

	TOTAL
	102
PROJECT IDENTIFICATION NUMBER	
05-00-000-010	
PROJECT NUMBER	
STP-A-000-S(330)--22-00	
R.O.W. PROJECT NUMBER	

INDEX OF SHEETS

105-3
10-18-05

No.	Description
A.01	Title Sheet
A.02-A.04	Location Maps
B.01-B.09	Typical Details
C.01-C.08	Estimate of Quantities, Tabulations
N.01-N.20	Iowa City Site Details
N.21-N.34	Quad Cities Site Details - Iowa Side
N.35-N.39	Quad Cities Site Details - Illinois Side
U.01	Iowa to Illinois Bid Item Conversion Details
U.02-U.42	Overhead Truss Site Designs in Illinois

For Project Location Map
Refer to Sheet No. A.02-A.05

INDEX OF SEALS

SHEET NO.	NAME	TYPE
A.01	Jeremey J. Vortherms	Primary Signature Block

LICENSED PROFESSIONAL ENGINEER
Jeremey J. Vortherms
15310
IOWA

I hereby certify that this plan was prepared by me or under my direct personal supervision and that I am a duly licensed Professional Engineer under the laws of the State of Iowa.

Signature: Jeremey J. Vortherms — Date: 1/2/07
Printed or Typed Name

My license renewal date is December 31, 20 07

Pages or sheets covered by this seal: A.01-A.04, B.01-B.09, C.01-C.08, N.01-N.39, U.01

SITE #9 / DMS #506
I-380 SOUTHBOUND
SMALL DMS ON STEEL POSTS

SITE #8 / DMS #507
I-380 NORTHBOUND
SMALL DMS ON STEEL POSTS

SITE #3 / DMS #503
I-80 WESTBOUND
SMALL DMS ON STEEL POSTS

SITE #4 / DMS #99
I-80 WESTBOUND
LARGE DMS ON TRUSS

SITE #5 / DMS #504
I-80 EASTBOUND
SMALL DMS ON STEEL POSTS

SITE #1 / DMS #501
I-80 EASTBOUND
SMALL DMS ON STEEL POSTS

SITE #2 / DMS #502
I-80 EASTBOUND
SMALL DMS ON STEEL POSTS

SITE #7 / DMS #505
US 218 SOUTHBOUND
SMALL DMS ON STEEL POSTS

SITE #6 / DMS #92
US 218 NORTHBOUND
LARGE DMS ON TRUSS

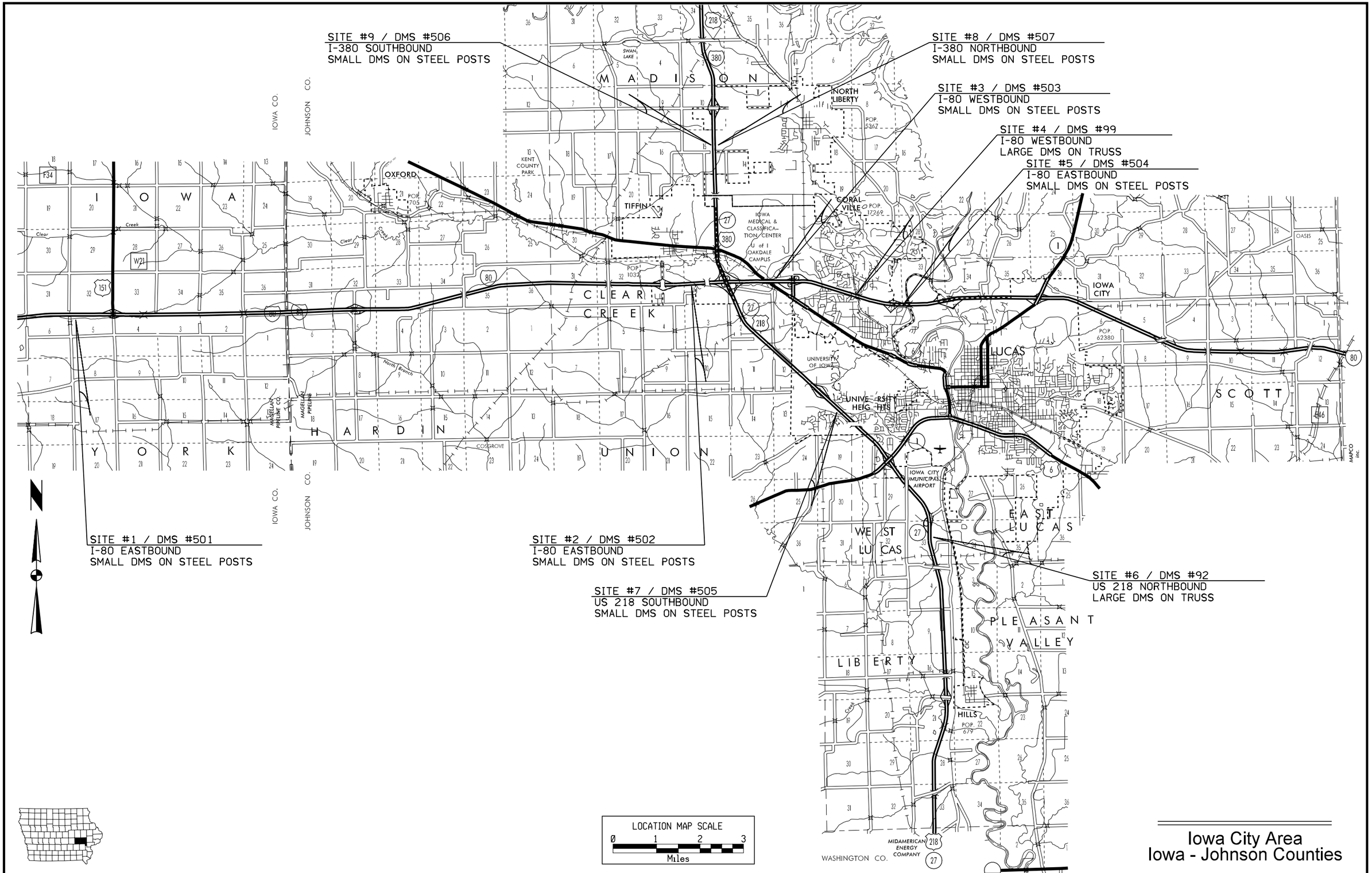

LOCATION MAP SCALE
0 1 2 3
Miles

Iowa City Area
Iowa - Johnson Counties

DESIGN TEAM VORTHERMS/SCHRODER	ENGLISH	IOWA DOT * OFFICE OF TRAFFIC & SAFETY	VARIOUS COUNTY	PROJECT NUMBER STP-A-000-S(330)--22-00	SHEET NUMBER A.02

29-JAN-2007 13:43 jvorthe w:\Projects\0000001005\TrafEng\00-000S-330\00000330.a01

SITE #11 / DMS #402
I-74 EASTBOUND
SMALL DMS ON STEEL POSTS

SITE #10 / DMS #401
I-80 WESTBOUND
SMALL DMS ON STEEL POSTS

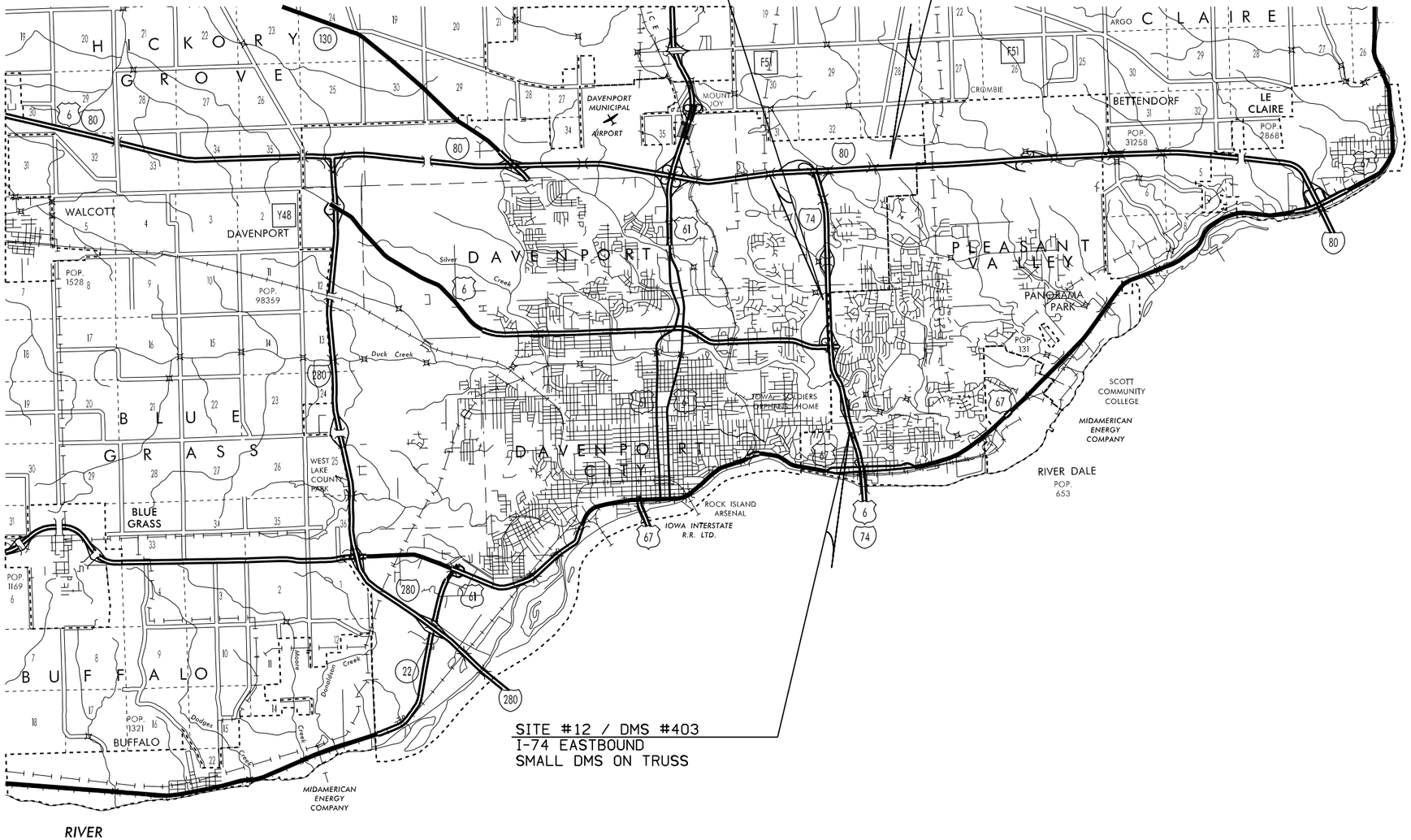

SITE #12 / DMS #403
I-74 EASTBOUND
SMALL DMS ON TRUSS

LOCATION MAP SCALE
0 1 2 3
Miles

Quad Cities Area
Scott County

DESIGN TEAM VORTHERMS/SCHRODER	ENGLISH	IOWA DOT * OFFICE OF TRAFFIC & SAFETY	VARIOUS COUNTY	PROJECT NUMBER STP-A-000-S(330)--22-00	SHEET NUMBER A.03

29-JAN-2007 13:44 jvorthe w:\Projects\0000001005\TrafEng\00-000S-330\00000330.a01

SITE #404 / DMS #404
I-74 WESTBOUND
SMALL DMS ON STEEL POSTS

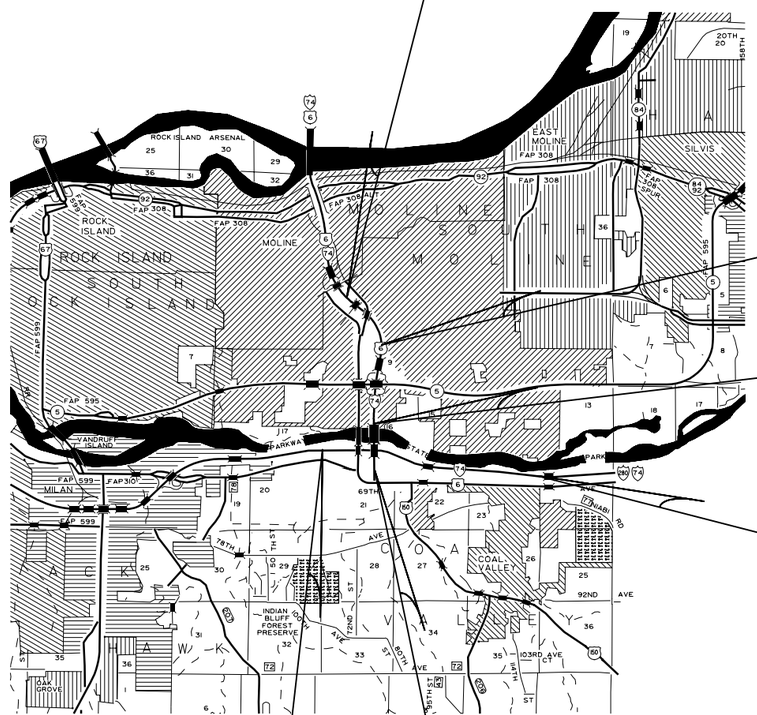

SITE #70 / DMS #70
I-74 WESTBOUND
LARGE DMS ON TRUSS

SITE #405 / DMS #405
I-74 WESTBOUND
SMALL DMS ON STEEL POSTS

SITE #68 / DMS #68
I-74 WESTBOUND
LARGE DMS ON TRUSS

SITE #407 / DMS #407
I-280 EASTBOUND
SMALL DMS ON STEEL POSTS

SITE #406 / DMS #406
SIDEROAD NORTHBOUND
SMALL DMS ON STEEL POSTS

LOCATION MAP SCALE
0 1 2 3
Miles

Quad Cities Area
Rock Island, IL

DESIGN TEAM VORTHERMS/SCHRODER	ENGLISH	IOWA DOT * OFFICE OF TRAFFIC & SAFETY	VARIOUS COUNTY	PROJECT NUMBER STP-A-000-S(330)--22-00	SHEET NUMBER A.04

29-JAN-2007 13:44 jvorthe w:\Projects\0000001005\TrafEng\00-000S-330\00000330.a01

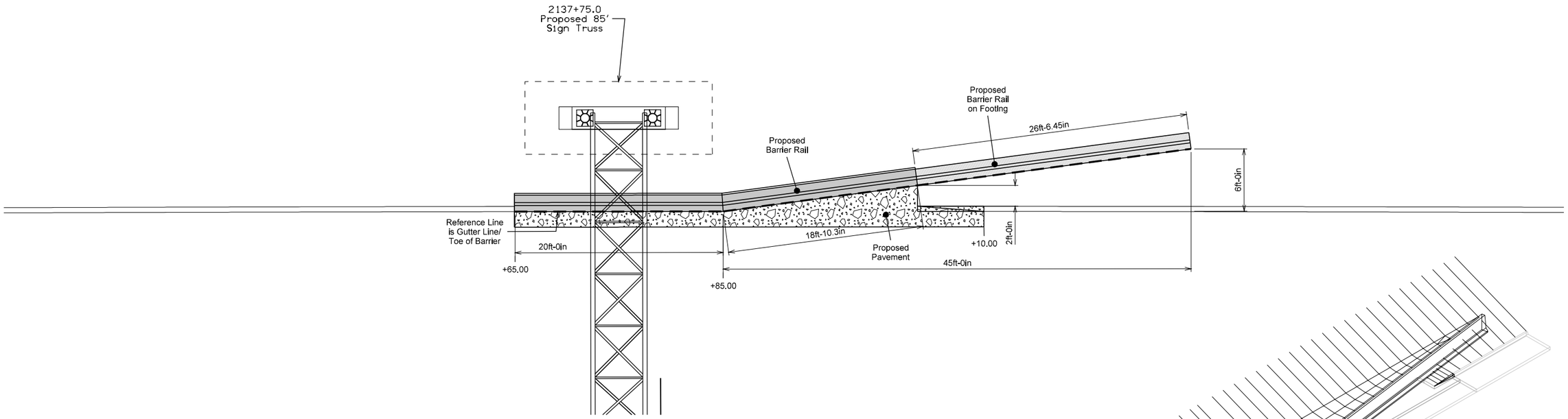

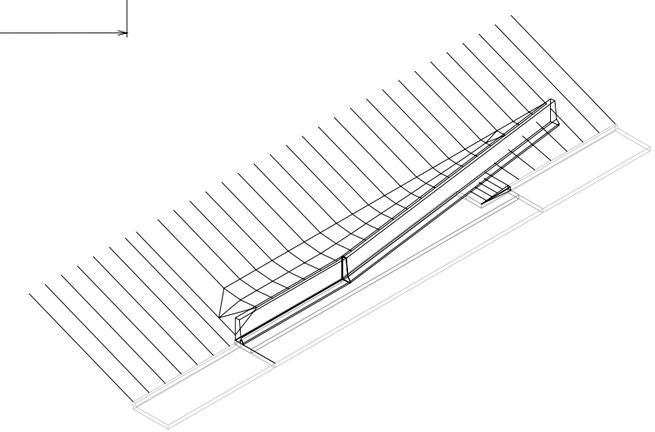

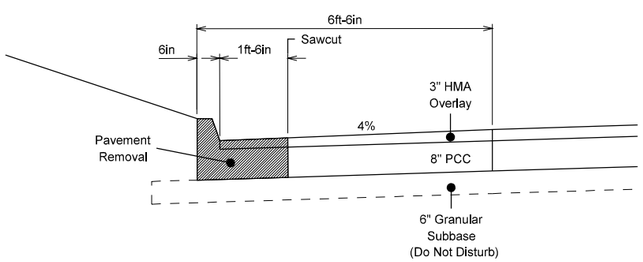

EXISTING PAVEMENT/ REMOVAL TYPICAL

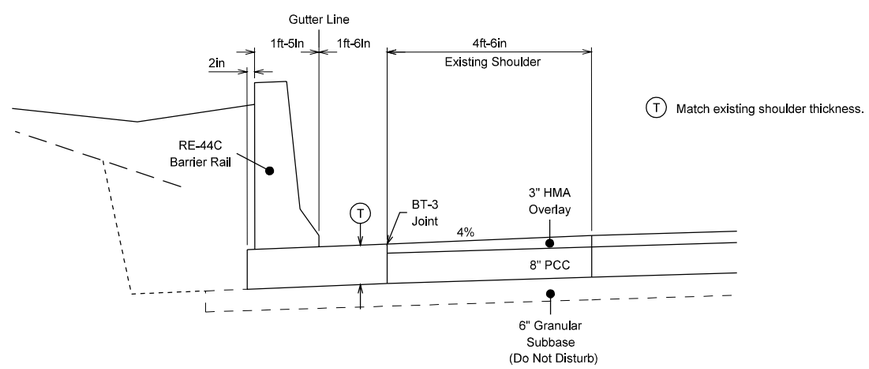

PROPOSED PAVEMENT/BARRIER RAIL TYPICAL

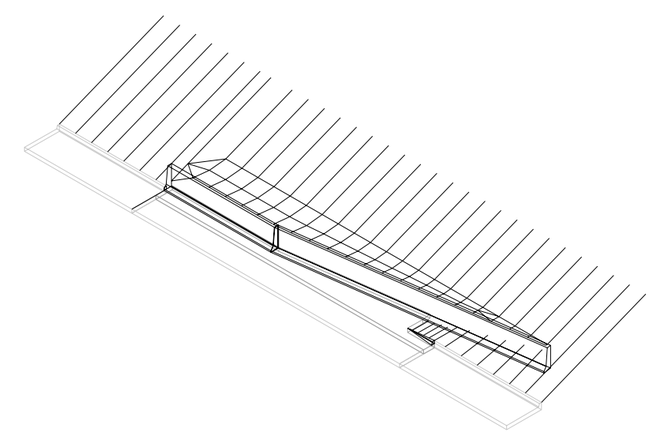

DETAILS OF CONCRETE BARRIER
RAIL INSTALLATION

DESIGN TEAM VORTHERMS/SCHRODER	ENGLISH	IOWA DOT * OFFICE OF TRAFFIC & SAFETY	VARIOUS COUNTY	PROJECT NUMBER STP-A-000-S(330)--22-00	SHEET NUMBER B.01

7199
12-12-06

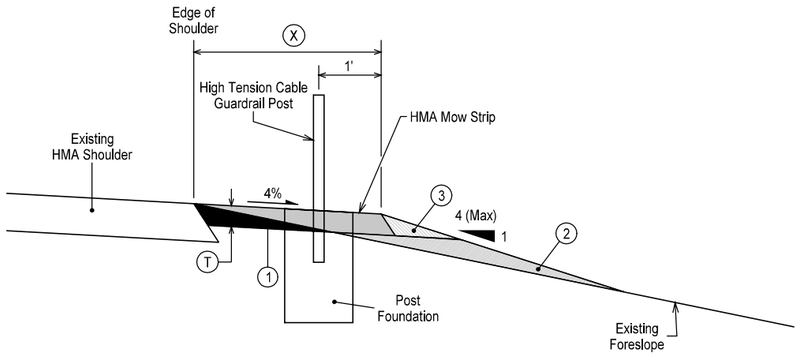

1. Remove existing fillet.
2. New embankment placed prior to HMA Mow Strip.
3. New embankment placed after HMA Mow Strip.
4. Bid Items

Items 1, 2 & 3 shall be included in the price bid for Embankment in Place.

TYPICAL SECTION
HOT MIX ASPHALT MOW STRIP
FOR HIGH TENSION CABLE GUARDRAIL
ADJACENT TO PAVED SHOULDER

Location					X	Quantities 4	
Road Identification	Station To Station		Dir.	Side	Feet	Embankment in Place CY	HMA Mow Strip SY
I-74	2135+90	2144+10	WB	Med	3	36.4	274
I-74	2137+40	2146+70	EB	Med	3	41.3	310
						77.7	584

ROADSIDE OBSTACLE, TWO-WAY PROTECTION

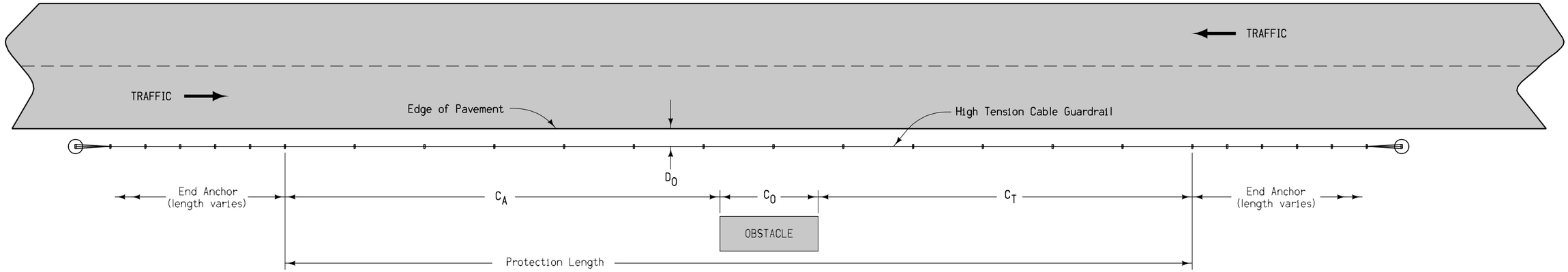

ROADSIDE OBSTACLE, ONE-WAY PROTECTION

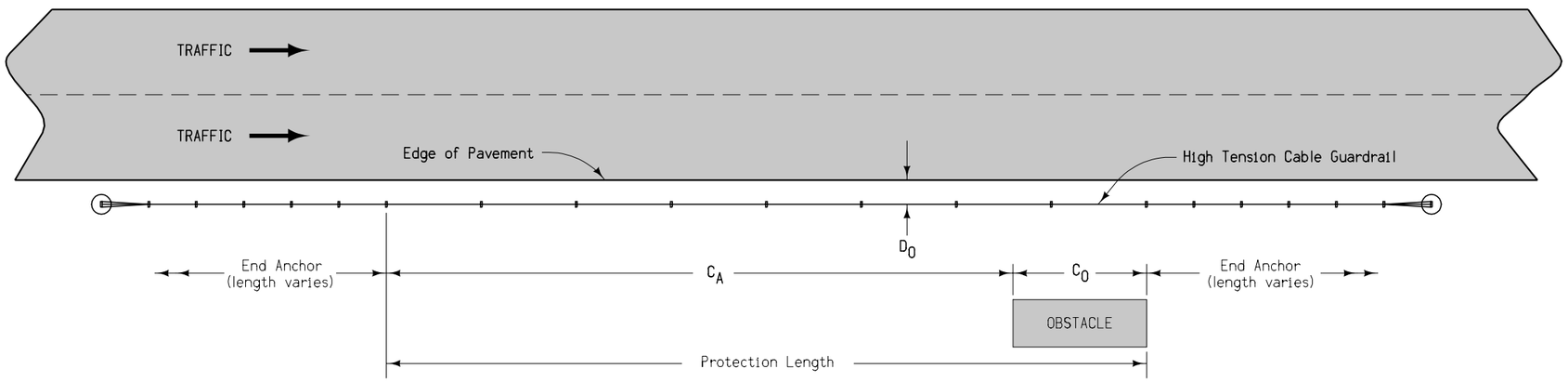

Contract Items:

High Tension Cable Guardrail

High Tension Cable Guardrail, End Anchor

Tabulation:

108-9A

	REVISION
	NEW
PROPOSED	**RE-88**
	SHEET 1 of 2

REVISIONS: New.

APPROVED BY DESIGN METHODS ENGINEER

HIGH TENSION CABLE GUARDRAIL

MEDIAN OBSTACLE PROTECTION

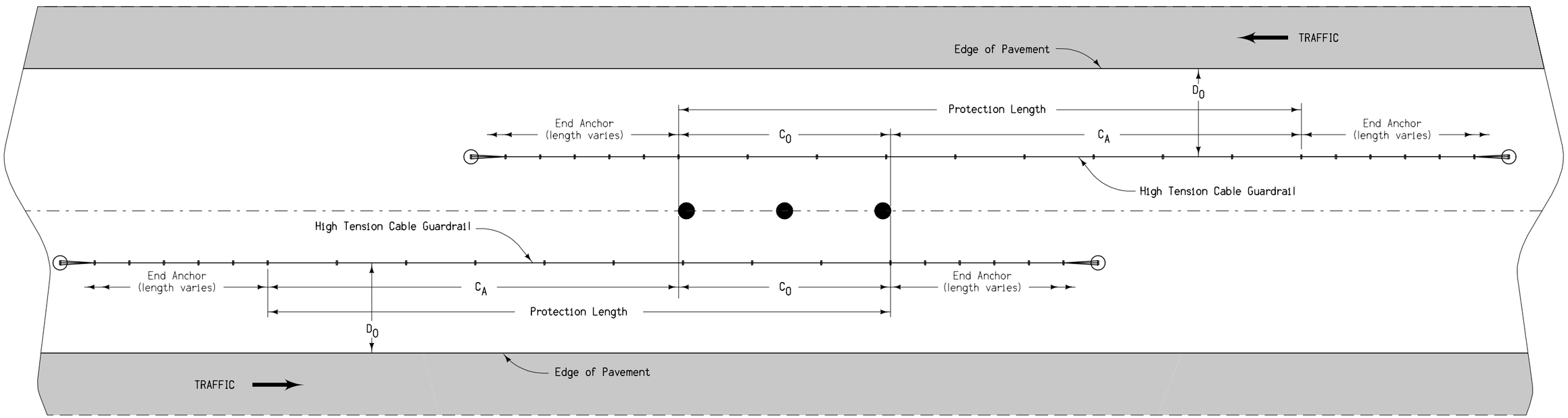

	REVISION
	NEW
PROPOSED	**RE-88**
	SHEET 2 of 2

REVISIONS: New.

APPROVED BY DESIGN METHODS ENGINEER

HIGH TENSION CABLE GUARDRAIL

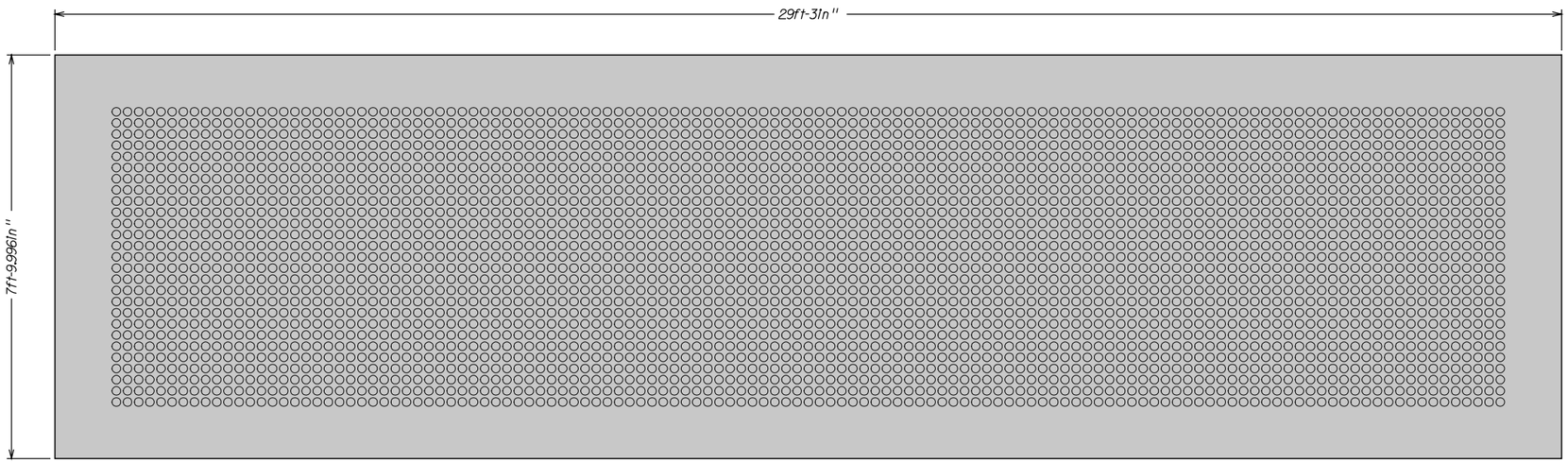

LARGE DMS

When plan details reference an Large DMS, they are referring to the 125 x 27 pixel, full matrix dynamic message sign furnished by Daktronics, Inc.

The approximate dimensions of a Large DMS are 29' 3" x 7' 10".

A Large DMS will only be installed on an overhead truss.

NOTE: A Large DMS will be referred to as an Overhead DMS in various locations in the plans. This inconsistent naming is a result of plan details being developed at various stages.

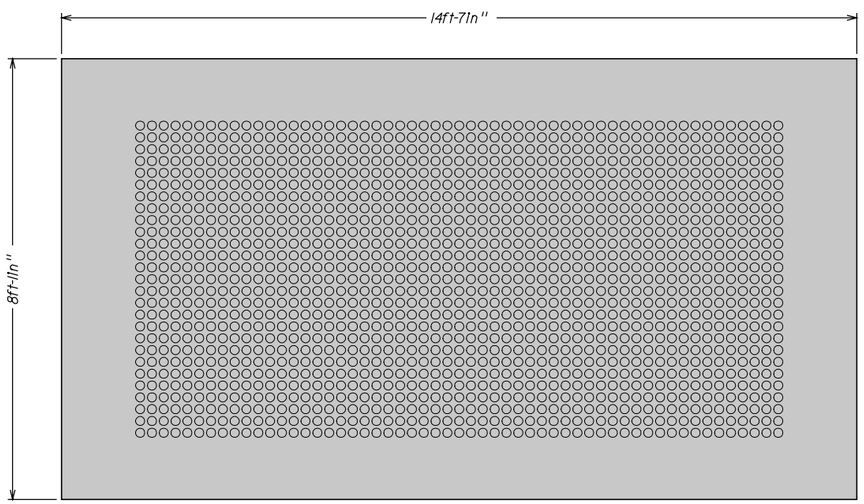

SMALL DMS

When plan details reference a Small DMS, they are referring to the 55 x 27 pixel, full matrix dynamic message sign furnished by Skyline, Inc.

The approximate dimensions of a Small DMS are 14' 7" x 8' 1".

A Small DMS will most commonly be installed on steel posts adjacent to the roadway. Occasionally, in areas with close interchange spacing, a Small DMS will be installed on an overhead truss with other Type B guide signs. Refer to the site specific details for the type of installation needed for the Small DMS.

NOTE: A Small DMS will be referred to as a Side of Road DMS in various locations in the plans. This inconsistent naming is a result of plan details being developed at various stages.

DYNAMIC MESSAGE SIGN (DMS) TYPICAL DIMENSIONS

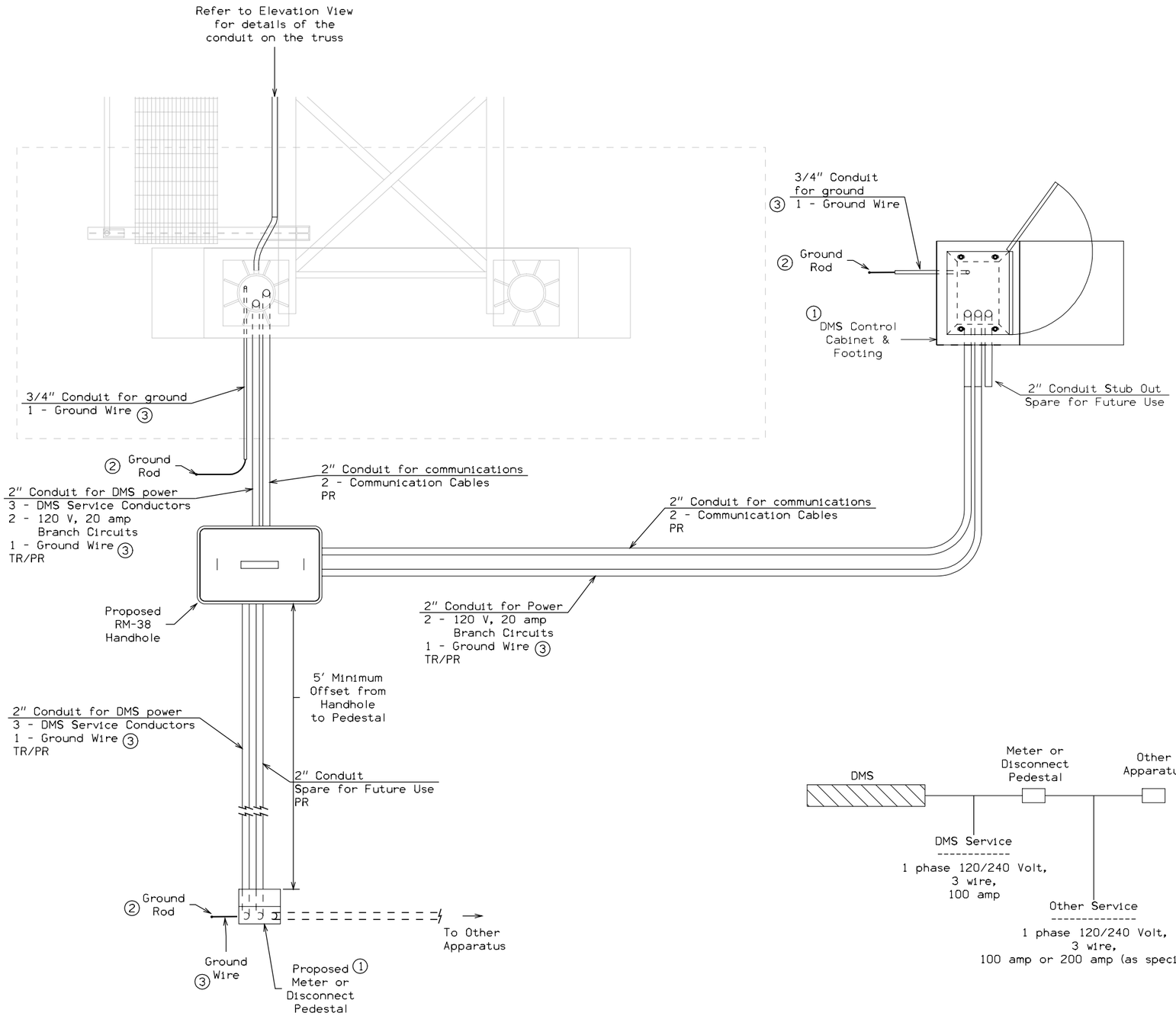

PLAN VIEW

POWER SERVICE SCHEMATIC

SITE WIRING NOTES:

High voltage and low voltage wires shall not be run in the same conduit. Use one conduit for power supply and branch circuit wires, and the other conduit for communication wires.

All wires shall be sized per NEC requirements when no size is indicated in the plans.

The DMS control cabinet and equipment will be furnished by others; and installed by the Contractor. The DMS control cabinet is designed to accommodate equipment to operate the DMS, including optional communication equipment. No other equipment shall be installed in the DMS control cabinet. The DMS power supply wires shall NOT pass through the DMS control cabinet.

The communication cables will be furnished by others; and installed by the Contractor. The Contractor shall leave 10 foot of slack on each end of each cable, coiled neatly in the DMS and in the DMS control cabinet.

The Contractor shall install the equipment and wiring from the Utility Company's service point to the DOT disconnect pedestal in accordance with the Utility Company's requirements. The DOT requires that all service wires inside the ROW be installed in conduit.

The DMS power supply wires, run from the disconnect pedestal to the DMS power supply, shall NOT pass through the DMS control cabinet.

① Refer to other drawings for specific details.

② Ground rods shall be copper, 5/8" diameter x 8' minimum length. Additional ground rods may be required per NEC Article 250.

③ The grounding electrode conductor (Ground Wire) shall meet the following requirements:

- it shall be copper and of the guage appropriately matched to the largest service conductor,
- it shall be connected to the ground rod iwth a clamp suitable for direct burial (if applicable),
- it shall be bonded to the control cabinet ground nut (if applicable),
- it shall be bonded to the truss leg gound nut (if applicable), and
- it shall be connected to the neutral bus in the pedestal (if applicable).

SITE WIRING DETAILS FOR DMS INSTALLATION ON A SIGN TRUSS (SHEET 1 OF 2)

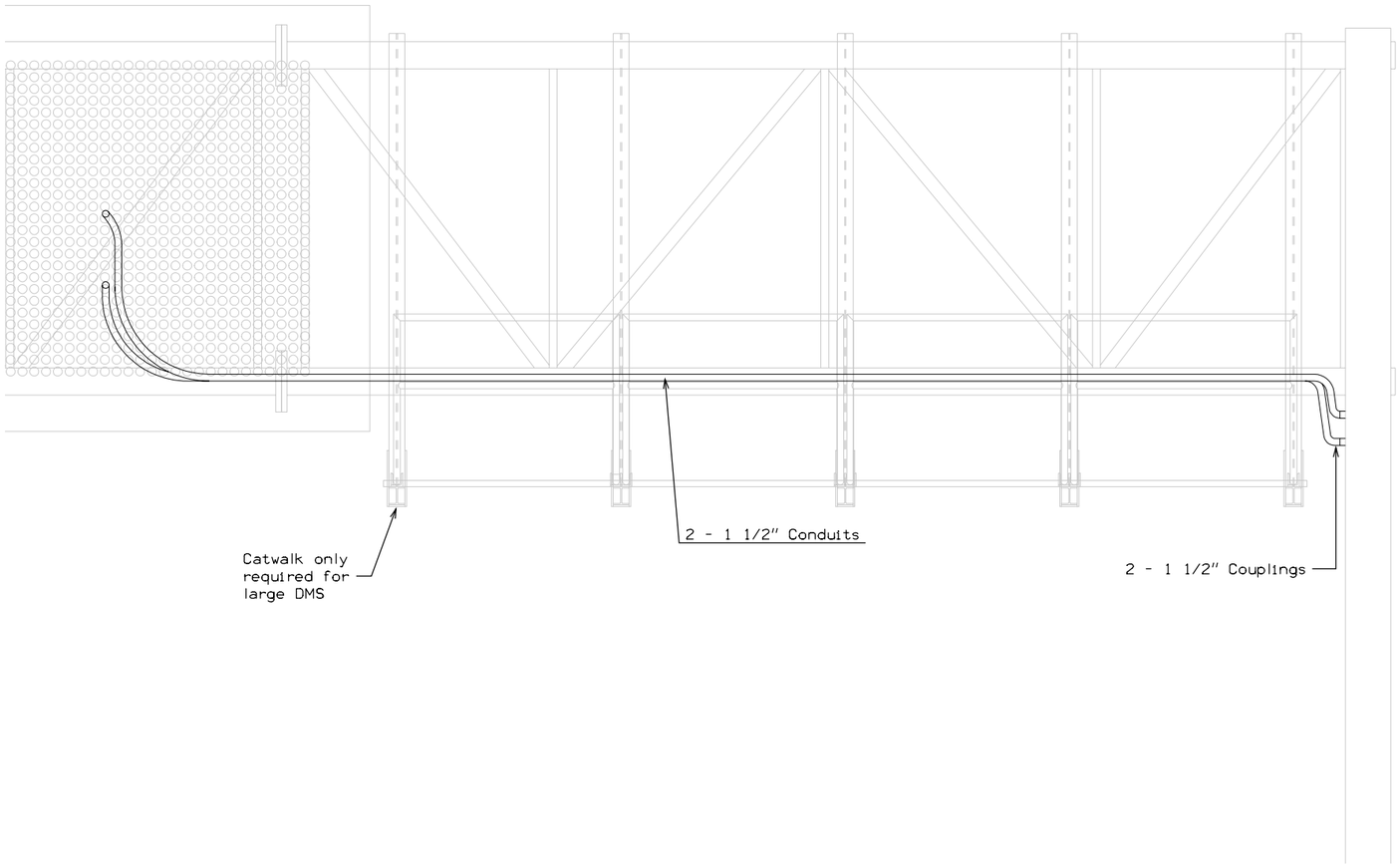

ELEVATION VIEW

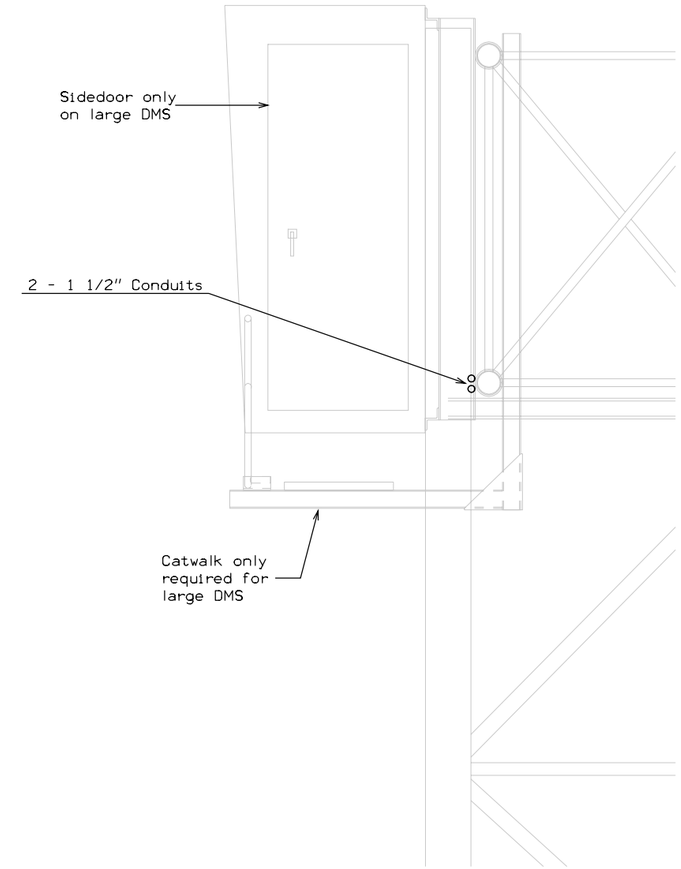

SIDE VIEW

Conduit banded to the truss chord should be rigid. Conduit used to make connections to the truss or DMS couplings may be rigid or flexible.

All conduit, fittings, seals and gaskets shall be weatherproof as per NEC requirements.

Banding material shall be stainless steel. Conduit shall be banded at regular intervals not to exceed 4 feet.

High voltage and low voltage wires shall not be run in the same conduit. Use one conduit for power supply and branch circuit wires, and the other conduit for communication wires.

SITE WIRING DETAILS
FOR DMS INSTALLATION
ON A SIGN TRUSS
(SHEET 2 OF 2)

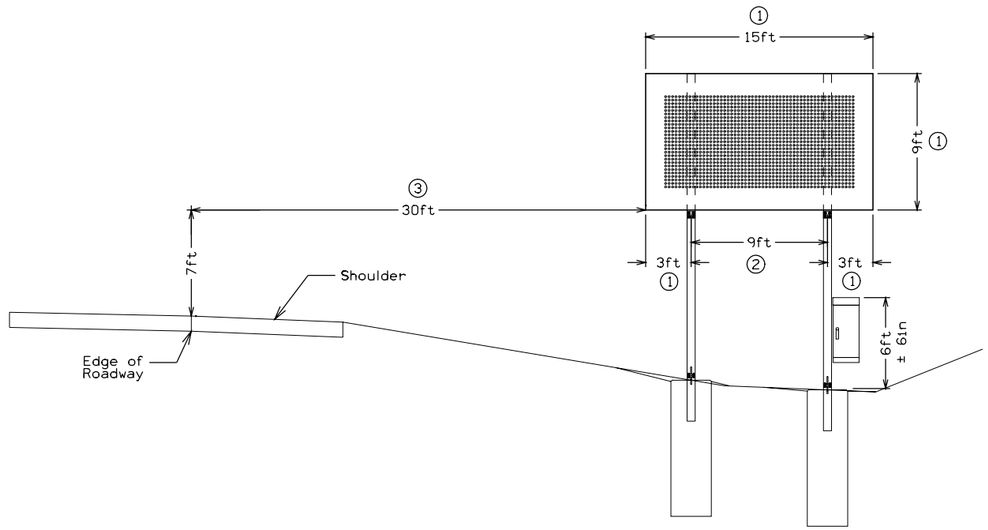

ELEVATION

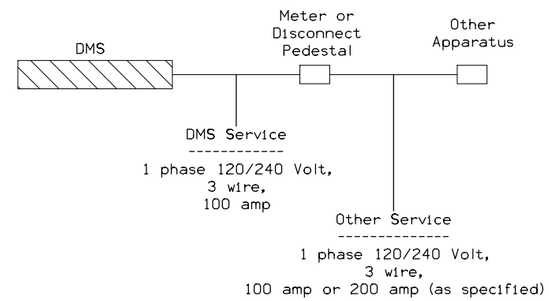

POWER SERVICE SCHEMATIC

1 Nominal dimensions. Actual DMS to be installed as follows:
- top of sign shall be flush with the top of posts, and
- the sign shall be centered horizontally on the posts.

2 Posts shall be installed 9 foot center-to-center, regardless of the actual DMS size.

3 Minimum offset is required to be 30 feet to meet clearzone requirements unless the DMS is protected by another measure. The steel posts are not considered breakaway for this installation because of the DMS weight, and because the control cabinet is installed on the leg.

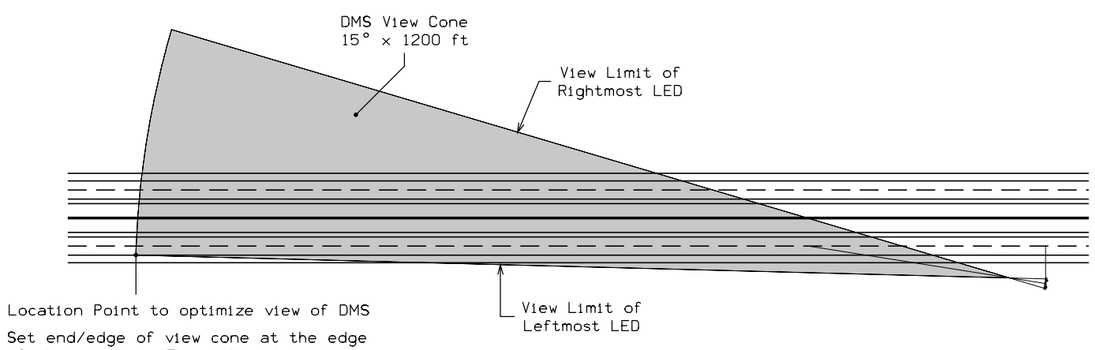

Set end/edge of view cone at the edge of the roadway. This will reduce the distance lost near the sign.

PLAN

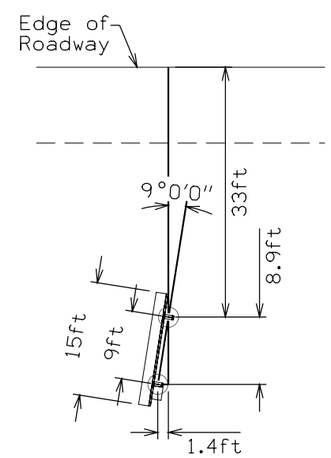

FOOTING
STAKING DIAGRAM

SITE INSTALLATION DETAILS
FOR DMS INSTALLATION
ON STEEL POSTS

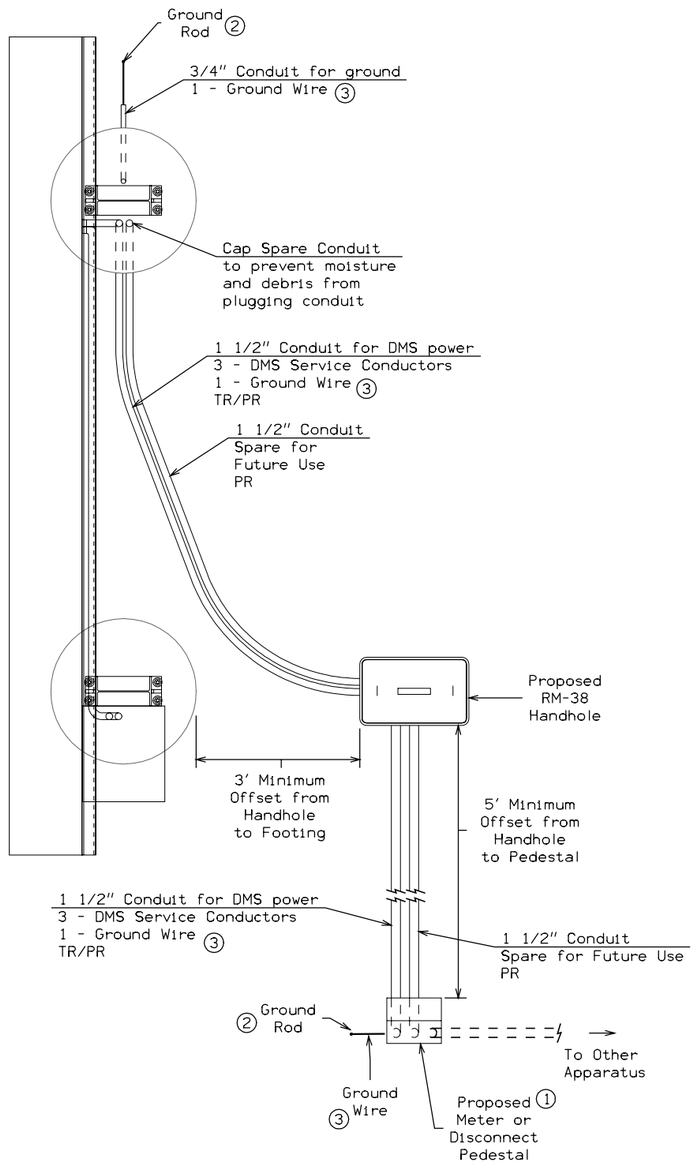

PLAN VIEW

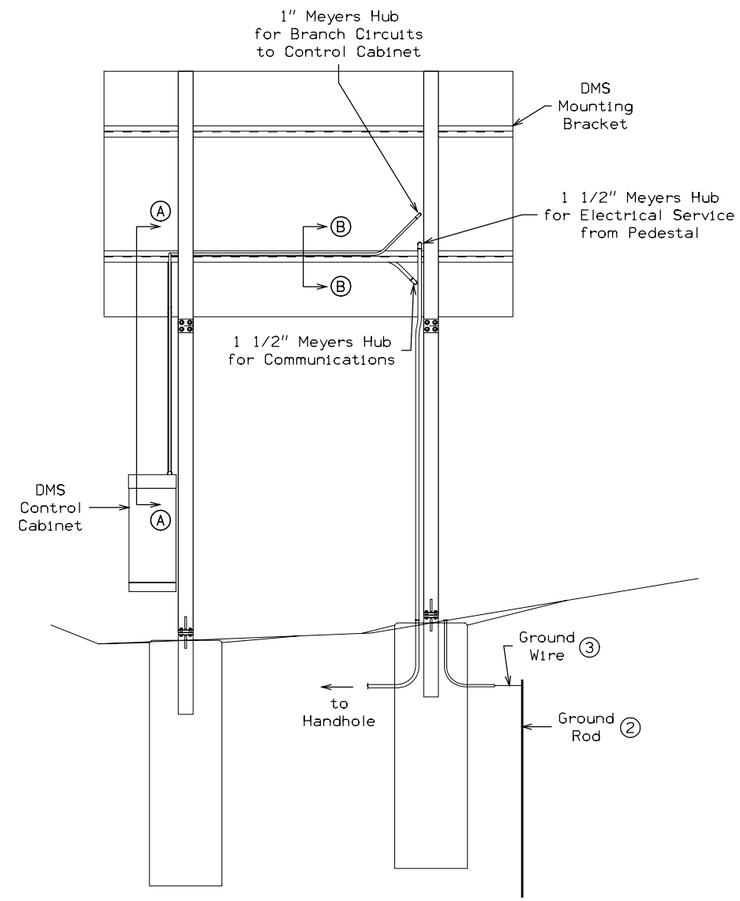

REAR VIEW

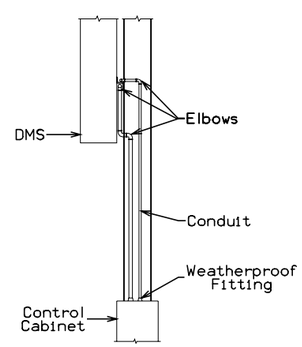

SECTION A-A

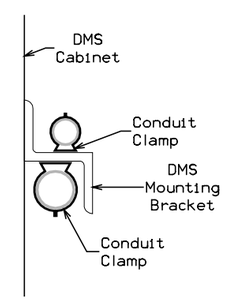

SECTION B-B

SITE WIRING NOTES:

High voltage and low voltage wires shall not be run in the same conduit. Use one conduit for power supply and branch circuit wires, and the other conduit for communication wires.

All wires shall be sized per NEC requirements when no size is indicated in the plans.

The DMS control cabinet and equipment will be furnished by others; and installed by the Contractor. The DMS control cabinet is designed to accommodate equipment to operate the DMS, including optional communication equipment. No other equipment shall be installed in the DMS control cabinet. The DMS power supply wires shall NOT pass through the DMS control cabinet.

The communication cables will be furnished by others; and installed by the Contractor. The Contractor shall leave 10 foot of slack on each end of each cable, coiled neatly in the DMS and in the DMS control cabinet.

The Contractor shall install the equipment and wiring from the Utility Company's service point to the DOT disconnect pedestal in accordance with the Utility Company's requirements. The DOT requires that all service wires inside the ROW be installed in conduit.

The DMS service conductors, which are installed between the pedestal and the DMS power supply, shall NOT pass through the DMS control cabinet.

① Refer to other drawings for specific details.

② Ground rods shall be copper, 5/8" diameter x 8' minimum length. Additional ground rods may be required per NEC Article 250.

③ The grounding electrode conductor (Ground Wire) shall meet the following requirements:

- it shall be copper and of the guage appropriately matched to the largest service conductor,
- it shall be connected to the ground rod iwth a clamp suitable for direct burial (if applicable),
- it shall be bonded to the control cabinet ground nut (if applicable),
- it shall be bonded to the truss leg gound nut (if applicable), and
- it shall be connected to the neutral bus in the pedestal (if applicable).

SITE WIRING DETAILS FOR DMS INSTALLATION ON STEEL POSTS

GENERAL NOTES

All electrical service supplied shall be:
60 hertz alternating current
1-phase 120/240 volt,
3 wire,
100 amp or 200 amp (as specified)

Details of power service shall be coordinated with the DOT contact and the utility company.

The Contractor shall make each DMS available to the DOT for testing forty-eight hours after installing the DMS on its support structure (either a truss or steel posts). Thus, the final power connections shall be completed within 48 hours of installing the DMS.

The final service connections by the utility company shall be completed prior to installing the DMS.

The Contractor shall notify the utility company 60 days prior to the date power service is required at a site. At the time of notification, the Contractor shall have completed all work required by the utility company in order to make final service connections, and shall make the site available to inspection by the utility company.

UTILITY COMPANY INFORMATION

LOCATION	DOT CONTACT	UTILITY CO CONTACT
Site #1 DMS #501 Ia City / I-80 EB	Travis Nitcher (319)-626-2386	Alliant Energy Doug Witzenburg (319)-551-8496
Site #2 DMS #502 Ia City / I-80 EB	Travis Nitcher (319)-626-2386	Linn County REC Mike Stephenson (319)-573-9384
Site #3 DMS #503 Ia City / I-80 WB	Travis Nitcher (319)-626-2386	Linn County REC Mike Stephenson (319)-573-9384
Site #4 DMS #99 Ia City / I-80 WB	Travis Nitcher (319)-626-2386	Linn County REC Mike Stephenson (319)-573-9384
Site #5 DMS #504 Ia City / I-80 EB	Travis Nitcher (319)-626-2386	Mid American Energy Butch Forbes (319)-341-4423
Site #6 DMS #92 Ia City / US 218 NB	Travis Nitcher (319)-626-2386	Mid American Energy Butch Forbes (319)-341-4423
Site #7 DMS #505 Ia City / US 218 SB	Travis Nitcher (319)-626-2386	Mid American Energy Butch Forbes (319)-341-4423
Site #8 DMS #507 Ia City / I-380 NB	Travis Nitcher (319)-626-2386	Linn County REC Mike Stephenson (319)-573-9384
Site #9 DMS #506 Ia City / I-380 SB	Travis Nitcher (319)-626-2386	Linn County REC Mike Stephenson (319)-573-9384
Site #10 DMS #401 Quad Cities, IA / I-80 WB	Sheila Lee (563) 391-4643	Mid American Energy Matt Chancellor 309-793-3833
Site #11 DMS #402 Quad Cities, IA / I-74 EB	Sheila Lee (563) 391-4643	Mid American Energy Matt Chancellor 309-793-3833
Site #12 DMS #403 Quad Cities, IA / I-74 EB	Sheila Lee (563) 391-4643	Mid American Energy Matt Chancellor 309-793-3833
Site #68 DMS #68 Quad Cities, IL / I-74 WB	Sheila Lee (563) 391-4643	Mid American Energy Matt Chancellor 309-793-3833
Site #70 DMS #70 Quad Cities, IL / I-74 WB	Sheila Lee (563) 391-4643	Mid American Energy Matt Chancellor 309-793-3833
Site #404 DMS #404 Quad Cities, IL / I-74 WB	Sheila Lee (563) 391-4643	Mid American Energy Matt Chancellor 309-793-3833
Site #405 DMS #405 Quad Cities, IL / I-74 WB	Sheila Lee (563) 391-4643	Mid American Energy Matt Chancellor 309-793-3833
Site #406 DMS #406 Quad Cities, IL / US 6 NB	Sheila Lee (563) 391-4643	Mid American Energy Matt Chancellor 309-793-3833
Site #407 DMS #407 Quad Cities, IL / I-280 EB	Sheila Lee (563) 391-4643	Mid American Energy Matt Chancellor 309-793-3833

UTILITY COMPANY INFORMATION

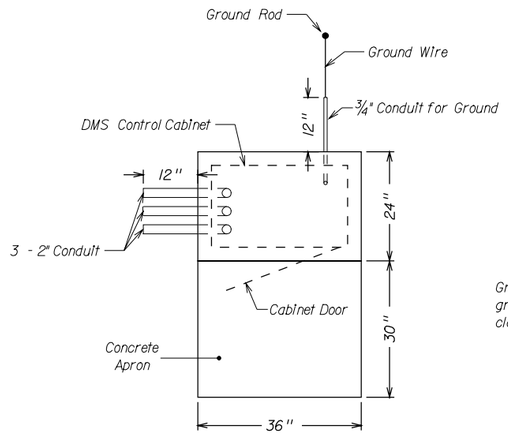

Top View

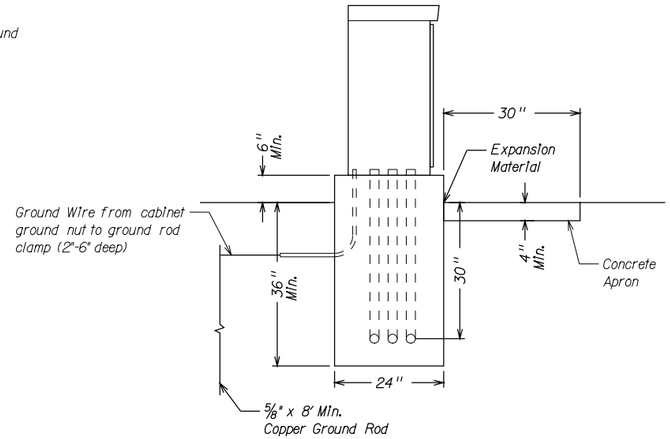

Side View

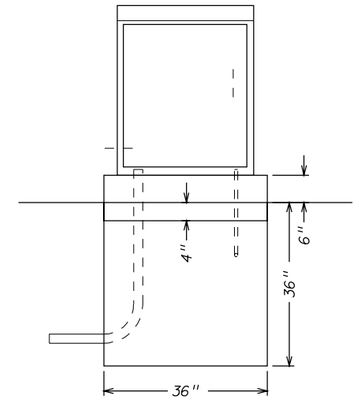

Front View

Center DMS Cabinet on footing and attach with approved pull out anchors. Refer to IM 453.09.

Conduits shall be positioned to fit inside the cabinet with a minimum clearance of 2" to all sides. Use the proposed cabinet to establish exact dimensions and placement.

DMS CONTROL CABINET FOOTING DETAILS

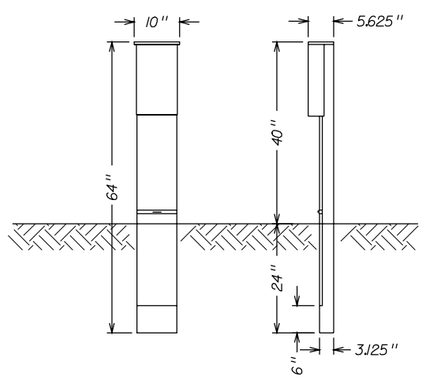

Nominal dimensions shown

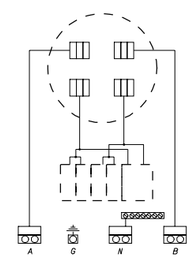

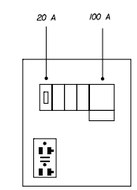

Service In:
- 60 hertz AC, 1 phase, 120/240 Volt 3 wire, 100 amp

Enclosure Details:
- Type 3R
- direct buried
- lockable, hinged cover
- 6 circuit interior to accept standard plug-in type circuit breakers

Features:
- one 20 amp, 120 volt GFI receptacle
- 100 amp, 120/240 volt circuit breaker (for DMS power)
- 20 amp, 120 volt circuit breaker (for receptacle)

DETAILS OF STANDARD GROUND MOUNTED DISCONNECT PEDESTAL

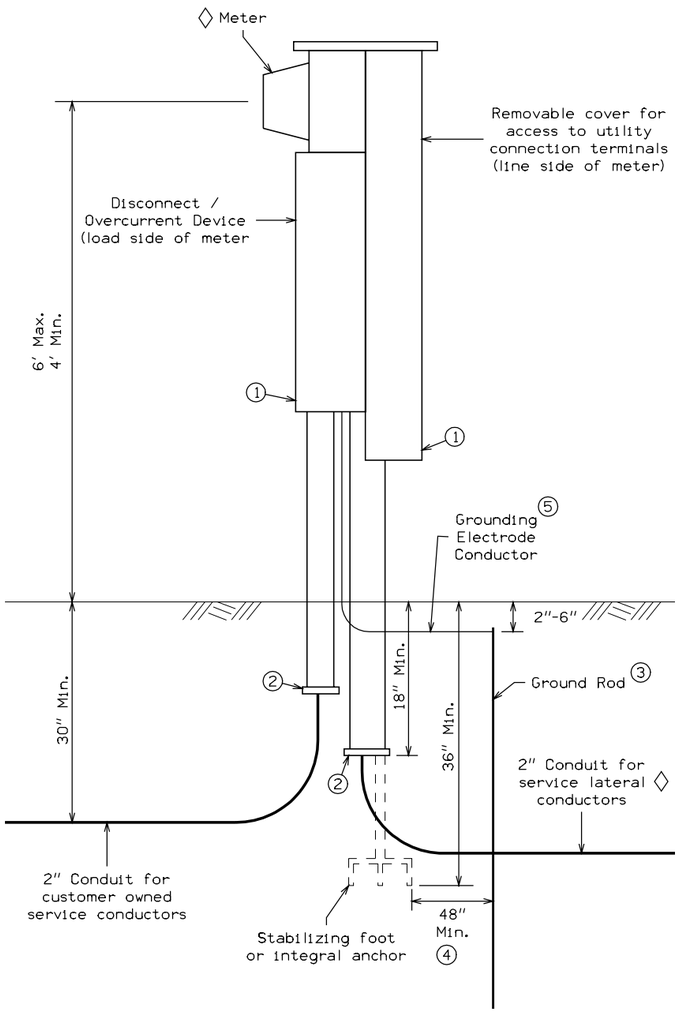

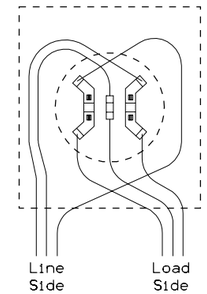

SELF-CONTAINED METER SOCKET WIRING DIAGRAM

for 1 phase 120/240 Volt, 3 wire, 100 amp or 200 amp service

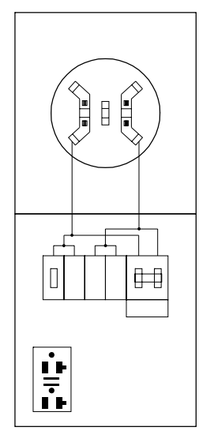

OPTION A

Features:
- 6 circuit interior to accept standard plug-in type circuit breakers
- 100 amp, 120/240 volt circuit breaker (for DMS power)
- 20 amp, 120 volt circuit breaker (for receptacle)
- one 20 amp, 120 volt GFI receptacle

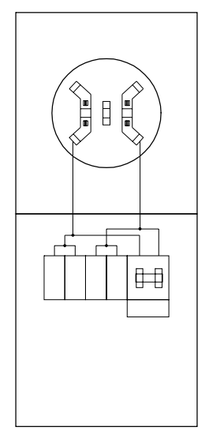

OPTION B

Features:
- 6 circuit interior to accept standard plug-in type circuit breakers
- 100 amp, 120/240 volt circuit breaker (for DMS power)

DISCONNECT / OVERCURRENT DEVICE WIRING DIAGRAM

GENERAL NOTES:

The utility company will furnish and install all ◊ marked items. The Contractor shall be responsible for all other items.

An address shall be permanently posted on the outside of the pedestal, below the meter.

All pedestal materials shall be aluminum or steel. Steel shall be a minimum 14 gauge, and shall be plated or galvanized. The finish shall be tough, non-fading and have a long service life.

A clear working space of not less than 36 inches in front, and 30 inches left and right of the pedestal shall be maintained.

Backfill around the pedestal shall be well tamped along the full 36 inch minimum embedment length.

Line-side service shall be 60 hertz alternating current, 1-phase 120/240 volt, 3 wire, 100 amp or 200 amp (as specified).

Load-side service shall be 60 hertz alternating current, 1-phase 120/240 volt, 3 wire, 100 amp.

All service equipment shall be UL listed, and shall meet the utility company specifications.

Grounding system shall meet the requirements of NEC Article 250, the utility company, and all other applicable codes.

Pedestal shall be bonded to the neutral conductor. The neutral conductor shall be equipped with a lug for exclusive use of a copper ground wire.

1. Provision to secure enclosure. Line-side provision shall be for either a seal, lock, or sealable bolt to secure the enclosure. Key locks will not be approved.
2. Metal edges at cable entrances shall be equipped to prevent damage for cables.
3. Ground rod shall be copper, 5/8" diameter x 8' minimum length. Additional ground rods may be required per NEC Article 250.
4. The ground rod shall not be closer that 4 feet from the pedestal to prevent damage when the underground service lateral conductors are installed.
5. The grounding electrode conductor shall meet the following requirements
   - it shall be copper and of the gauge appropriately matched to the largest service conductor,
   - it shall be connected to the neutral bus in the disconnect/ overcurrent device,
   - it shall be connected to the ground rod with a clamp suitable for direct burial, and
   - it shall not be placed inside the service conduits.

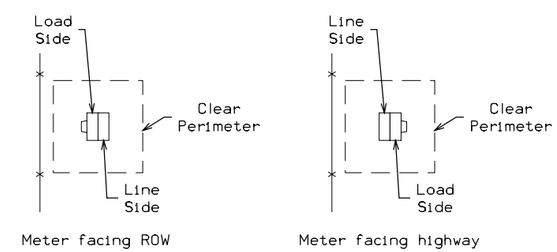

METER ORIENTATION

DETAILS OF STANDARD GROUND MOUNTED METER PEDESTAL

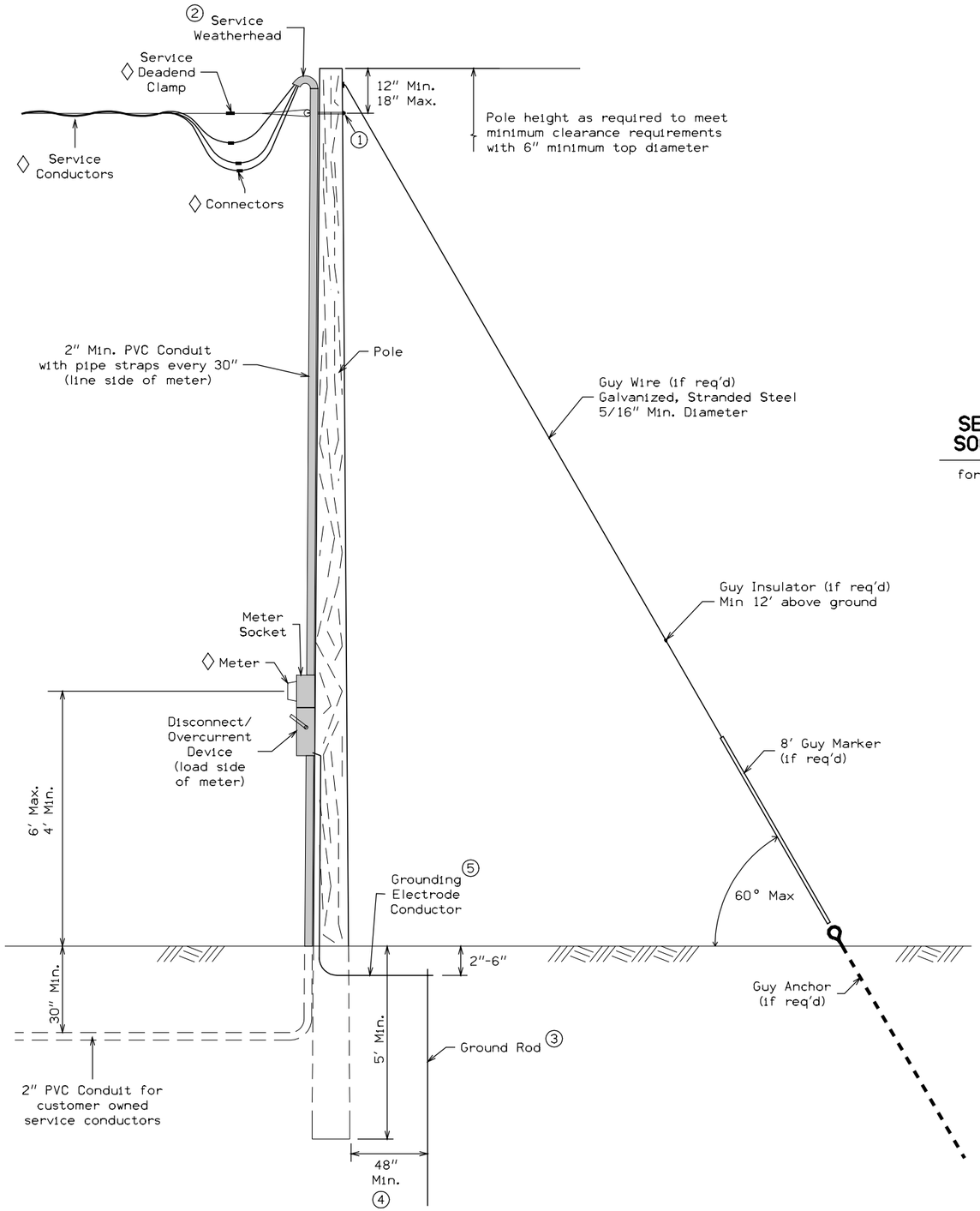

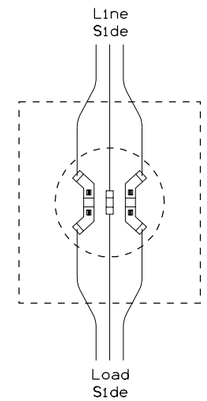

SELF-CONTAINED METER SOCKET WIRING DIAGRAM

for 1 phase 120/240 Volt, 3 wire, 100 amp or 200 amp service

GENERAL NOTES:

The utility company will furnish and install all ◇ marked items. The Contractor shall be responsible for all other items.

All disconnect and overcurrent device enclosure materials shall be aluminum or steel. Steel shall be a minimum 14 gauge, and shall be plated or galvanized. The finish shall be tough, non-fading and have a long service life.

A clear working space of not less than 36 inches in front, and 30 inches left and right of the meter shall be maintained.

Line-side service shall be 60 hertz alternating current, 1-phase 120/240 volt, 3 wire, 100 amp or 200 amp (as specified).

Load-side service shall be 60 hertz alternating current, 1-phase 120/240 volt, 3 wire, 100 amp.

All service equipment shall be UL listed, and shall meet the utility company specifications.

Grounding system shall meet the requirements of NEC Article 250, the utility company, and all other applicable codes.

① Insulated service bracket and eye bolt.

② Service weatherhead shall be located above the service attachment point to insure a positive drip loop.

③ Ground rod shall be copper, 5/8" diameter x 8' minimum length. Additional ground rods may be required per NEC Article 250.

④ The ground rod shall not be closer that 4 feet from the pole to prevent damage when the underground customer service conductors are installed.

⑤ The grounding electrode conductor shall meet the following requirements
- it shall be copper and of the gauge appropriately matched to the largest service conductor,
- it shall be connected to the neutral bus in the disconnect/ overcurrent device,
- it shall be connected to the ground rod with a clamp suitable for direct burial, and
- it shall not be placed inside the service conduits.

DETAILS OF STANDARD METER POLE

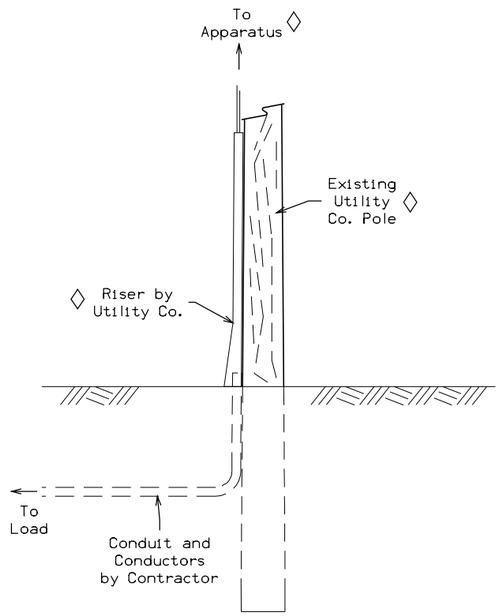

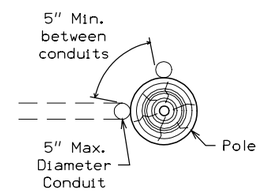

GENERAL NOTES:

The utility company will furnish and install all ◊ marked items. The Contractor shall be responsible for all other items.

The Contractor shall contact the utility company prior to installation to identify an approved conduit position, and to determine how much conductor shall be coiled at the base of the pole in order to reach the apparatus.

When more than one conduit is installed on the riser, the conduits must have a minimum spacing of 5 inches, and be placed against the pole. This is in order to accommodate the utility company's cable guard.

Conduits shall be installed so that the top end is 4 to 6 inches above the final grade.

Where conduit is to be extended to a location where the utility company is installing a replacement pole or new pole, the conduit shall not be installed until the pole work has been completed by the utility company.

UNDERGROUND CONDUIT AT UTILITY COMPANY RISERS

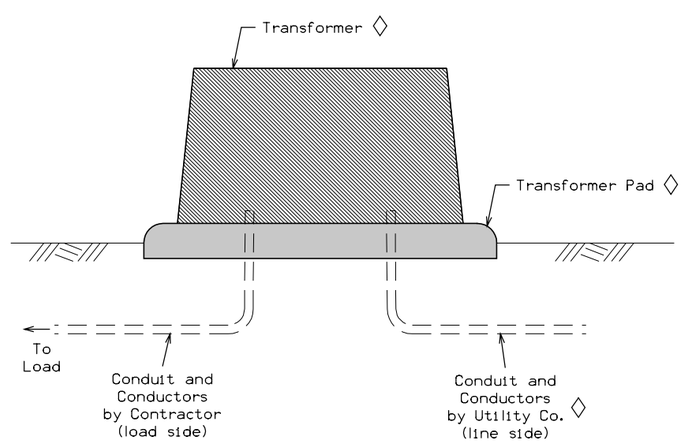

GENERAL NOTES:

The utility company will furnish and install all ◊ marked items. The Contractor shall be responsible for all other items.

The Contractor shall contact the utility company to determine the following:
- an approved conduit location
- how much conduit to leave sticking out of the ground in order to make final connections
- how much conductor to leave coiled at the base of the transformer in order to make final connections

Where conduit is to be extended to a location where the utility company is installing a new transformer, coordinate with the utility company to determine if the transformer will be installed before or after the conduit extension.

UNDERGROUND CONDUIT AT PAD MOUNTED TRANSFORMERS

ESTIMATED PROJECT QUANTITIES

100-1C
07-15-97

Item No.	Item Code	Item	Unit	Quantities										
				Estimated						As Built				
				Division 1	Division 2	Division 3	Division 4	Division 5	Total	Division 1	Division 2	Division 3	Division 4	Division 5
1	2102-2625000	Embankment-In-Place	CY	0	148.4	0			148.4					
2	2301-1083000	STD/S-F PCC Pav't, CL M CL 3, Var Thick	SY	0	18	0			18					
3	2401-6745355	Removal of Conc Footing of Highway Sign	Each	2	8	0			10					
4	2401-6745915	Removal of Sign Support & Footing	Each	0	2	0			2					
5	2402-2720000	Excavation, Class 20	CY	151.8	188.2	0			340					
6	2403-0100000	Structural Concrete, Miscellaneous	CY	78.84	76.8	0			155.64					
7	2404-7775005	Reinforcing Steel, Epoxy Coated	LB	7870	7676	0			15546					
8	2423-1010700	Overhead Sign Support Structure, Alum 70'	Each	1	0	0			1					
9	2423-1010800	Overhead Sign Support Structure, Alum 80'	Each	1	0	0			1					
10	2423-1010850	Overhead Sign Support Structure, Alum 85'	Each	0	2	0			2					
11	2505-4008100	Remove Guardrail	LF	137.5	326	0			463.5					
12	2505-6000111	High Tension Cable Guardrail	LF	550.9	1717.2	0			2268.1					
13	2505-6000121	High Tension Cable Guardrail, End Anchor	Each	6	4	0			10					
14	2505-6000131	High Tension Cable Guardrail, Spare Part Kit	Each	1	1	0			2					
15	2509-0000016	Temp Crash Cushion, Severe Use (SU)	Each	0	1	0			1					
16	2510-6745850	Removal of Pavement	SY	0	10	0			10					
17	2513-0473443	Conc Barrier, RE-44C	LF	0	38.86	0			38.86					
18	2513-0474443	Conc Barrier, RE-44C+Footing	LF	0	26.54	0			26.54					
19	2524-9080290	Conc Footing - Brkwy Sign Post, 2'8" x 9'	Each	17	20	0			37					
20	2524-9280426	Steel Brkwy Post - Type B Sign, W 12 x 26	LF	370.4	423.6	0			794					
21	2524-9380001	Type B Sign, Extruded Alum Struct Panel	SF	0	330	0			330					
22	2528-8400048	Temporary Barrier Rail, Concrete	LF	262.5	125	0			387.5					
23	2528-8445110	Traffic Control	LS	0.5	0.5	0			1					
24	2533-4980005	Mobilization	LS	0.25	0.25	0.5			1					
25	2599-9999003	IL - Concrete Foundation	CY	0	0	8.91			8.91					
26	2599-9999003	IL - Drilled Shaft Concrete Foundation	CY	0	0	31.92			31.92					
27	2599-9999005	DMS Installation, 125 x 27 pixel sign (large DMS)	Each	2	0	2			4					
28	2599-9999005	DMS Installation, 55 x 27 pixel sign (small DMS)	Each	7	7	0			14					
29	2599-9999005	Remove & Reinstall Type B Sign	Each	1	5	0			6					
30	2599-9999005	Removal of Type B Sign	Each	1	0	0			1					
31	2599-9999005	Remove & Reinstall Type A Sign	Each	1	0	0			1					
32	2599-9999005	IL - Traffic Control & Protection	Each	0	0	1			1					
33	2599-9999005	IL - Impact Atten, Fully Redir, Wide, TL-3	Each	0	0	1			1					
34	2599-9999009	IL - Overhead Sign Structure, Type III-A	LF	0	0	166			166					
35	2599-9999009	IL - Overhead Sign Structure Walkway	LF	0	0	26			26					
36	2599-9999018	HMA Mow Strip	SY	0	584	0			584					

01-20-84 204-2

All holes resulting from operations of the contractor, including removal of guardrail posts, fence posts, utility poles, or foundation studies, shall be filled and consolidated to finished grade as directed by the engineer to prevent future settlement. The voids shall be filled as soon as practical - preferably the day created and not later than the following day. Any portion of the right-of-way or project limits (including borrow areas and operation sites) disturbed by any such operations shall be restored to an acceptable condition. This operation shall be considered incidental to other bid items in project.

10-22-93 204-4

All guardrail materials that are removed and not reused on this project shall become the property of the contractor. Any material to be used on this project that is damaged due to the carelessness of the contractor shall be replaced at the contractor's expense without cost to the State of Iowa.

06-22-84 251-2

The contractor is hereby notified that removal of any existing traffic markers, warning devices or guardrail barriers shall be scheduled subject to the approval of the Engineer. The contractor may be required to place temporary warning devices at certain locations where replacement features are not installed the same day during which any such removals take place.

Contractor shall lift the DMS into position with their own equipment. Use of DOT equipment shall not be allowed.

DMS shall not be installed if the work to be completed by the utility company is not one hundred percent complete. This will require that all activities by the Contractor necessary to commence utility work be completed in an appropriate time frame.

Contractor shall complete all electrical and communication work within 48 hours of installing the DMS on its support structure.

DMS shall be ready for testing 48 hours after installation on its support structure.

Shop drawing submittals will be allowed to be made electronically in order to expedite material ordering, if desired.

Drawings shall be submitted via PDF if an electronic submittal is made. Drawings will be reviewed and returned in PDF format regardless of format submitted.

Submittals shall be coordinated with the Resident Construction Engineer.

Electronic drawings may be sent to:
Jeremey.Vortherms@dot.iowa.gov

Division 1 Bid Items are for sites found in Iowa and Johnson counties around Iowa City. The work at these sites is designed as per Iowa specifications and standards.

Division 2 Bid Items are for sites found in Scott County, Iowa and Rock Island County, Illinois. At these sites, we will be installing side of road sized DMS signs. The work at these sites is designed as per Iowa specifications and standards.

Division 3 Bid Items are for sites in Rock Island County, Illinois. The work at these sites is designed as per Illinois specifications and standards.

04-03-01 203-2

During construction of this project, the contractor will be required to coordinate his operations with those of other contractors working within the same area. Other work in progress during the same period of the time will include construction of the following projects:

Project	Type of Work
IMN-74-1(139)5--0E-82,	Bridge Washing
IMN-74-1(133)0--0E-82,	PCC Patching
IMN-80-8(223)278--0E-82,	PCC Patching
MP-218-6(700)86--76-52,	PCC Patching
STP-1-5(69)--2C-52,	Grade & PCC Pave
IMN-80-6(240)240--0E-52,	PCC Patching
IM-80-6(219)240--13-52,	Grade & PCC Pave
IMN-80-6(255)205--0E-48,	PCC Pave
NHSN-218-3(70)--2R-92,	Rumble Strips
IMN-380-6(235)0--0E-52,	PCC Patching

TRAFFIC CONTROL PLAN

108-23
04-04-89

1. Traffic will be maintained on the project at all times.

   IOWA CITY AREA & QUAD CITIES AREA [IOWA]

   Lane closures will be permitted from 7 PM to 6 AM beginning on Monday at 7 PM and ending on Friday at 6 AM, and from 9 PM on Sunday to 6 AM on Monday.

   Lane closures outside of these time periods must have prior approval of the Engineer.

   QUAD CITIES AREA [ILLINOIS]

   Lane closures in the Illinois Quad Cities Area will be as allowed by the Illinois DOT.

2. Traffic control on this project shall be in accordance with the Standard Road Plans listed in Tab. 105-4 on the Title Sheet and/or appropriate Detail Sheets included in the plans. For additional complementary information, refer to Part 6 of the Manual on Uniform Traffic Control Devices and the current Standard Specifications.

Item No.	Item Code	Description
1	2102-2625000	EMBANKMENT-IN-PLACE Item includes quantities associated with construction of an HMA Mow Strip, and Concrete Barrier Rail. HMA Mow Strip = 77.7 CY Concrete Barrier = 70.7 CY (of which approximately 53.4 should be on site because of excavation)
2	2301-1083000	STD/S-F PCC PAV'T, CL M CL 3, VAR THICK Item is for the construction of pavement to install concrete barrier rail. Refer to site detail sheets for specific requirements.
3	2401-6745355	RMVL OF CONC FOOTING OF HIGHWAY SIGN This item shall consist of removal of concrete footings for steel breakaway sign support posts. Refer to tabulation REMOVAL for locations and details. Concrete footings or parts of concrete footings removed shall become the property of the Contractor, and shall be removed in accordance with Article 1104.08. Unless otherwise provided or ordered, concrete footings for steel breakaway sign support posts shall be removed 1 foot below natural ground surface. Where portions of the existing concrete footings lie wholly or in part within limits for a new structure (culvert, concrete footing, or other), they shall be removed as necessary to accommodate construction of the proposed structure. Holes remaining from the removal of concrete footings for steel breakaway sign support posts shall be backfilled with suitable earth to the original level or to the natural ground surface in accordance with Article 2402.09. Measurement: The Engineer will count each concrete footing for steel breakaway sign support post removed. Payment: For each concrete footing for steel breakaway sign support post removed, the Contractor shall be paid the contract unit price. This payment shall be full compensation for furnishing all material, equipment, and labor and for the performance of all work necessary for removal of the concrete footings from the project and for any backfilling made necessary by these operations.
4	2401-6745915	RMVL OF SIGN SUPRT STRUCT+FOOTING This item shall consist of removal of Type B Sign Support Structures and Footings from the project. Refer to tabulation REMOVAL for locations and details. Each of the following is to be considered a Type B Sign Support Structure: - overhead sign truss and footings, - cantilevered sign truss and footing, - bridge mounted brackets, - monotube sign structure and footings, - dualmonotube sign structure and footings, and - mastarm sign structure and footing. The Contractor shall remove each sign support structure identified in the plans. Unless otherwise noted, all sign support structures or parts of sign support structures to be removed shall become the property of the Contractor. Sign support structures which may be reused shall be match marked, dismantled, and stored as designated in the plans. Dismantling and handling shall be done in such a way to not impair strength or usefulness of the material. All loose parts shall be wired to adjacent members or packed in suitable containers. Dismantled members shall be stored in neat piles at locations specified in the plans or within the right-of-way in the vicinity of the work at points designated by the Engineer. When provided in the plans, the Contractor shall deliver the sign support structure to be reused to a DOT storage area within 50 miles, as designated by the Engineer. Unless otherwise provided or ordered, concrete footings for sign support structures shall be removed 1 foot below natural ground surface. Where portions of the existing concrete footings lie wholly or in part within the limits for a new structure (culvert, concrete footing, or other), they shall be removed as necessary to accommodate construction of the proposed structure. Holes remaining from the removal of concrete footings for sign support structures shall be backfilled with suitable earth to the original level or to the natural ground surface in accordance with Article 2402.09. Measurement: The Engineer will count each Type B Sign Support Structure removed. Payment: For each Type B Sign Support Structure removed, the Contractor shall be paid the contract unit price. This payment shall be full compensation for furnishing all material, equipment, and labor and for performance of all work necessary for removal of the Type B Sign Support Structure from the project and for any backfilling made necessary by these operations.
5 6 7 8 9 10	2402-2720000 2403-0100000 2404-7775005 2423-1010700 2423-1010800 2423-1010850	EXCAVATION, CL 20 STRUCT CONC (MISCELLANEOUS) REINFORC STEEL, EPOXY COATED O'HD SIGN SUPPORT STRUCTURE, ALUM 70' O'HD SIGN SUPPORT STRUCTURE, ALUM 80' O'HD SIGN SUPPORT STRUCTURE, ALUM 85' Items are for the installation of (4) new overhead sign trusses. Refer to tabulation OVERHEAD for locations and details. Refer to site detail sheets for specific site requirements.
11	2505-4008100	RMV G'RAIL Refer to tabulation 110-7A for locations and details. Requires the removal of posts and end anchorages which shall be incidental. All guardrail materials removed shall become the property of the Contractor.

ESTIMATE REFERENCE INFORMATION
100-4A
10-29-02

Item No.	Item Code	Description
12 13 17 18	2505-6000111 2505-6000121 2513-0473443 2513-0474443	HIGH TENSION CABLE G'RAIL HIGH TENSION CABLE G'RAIL, END ANCHOR CONC BARRIER, RE-44C CONC BARRIER, RE-44C + FOOTING Items are for permanent safety protection at various locations. Refer to tabulation 108-9A and 108-18 for locations and details. Refer to site detail sheets for specific site requirements.
14	2505-6000131	HIGH TENSION CABLE G'RAIL,SPARE PART KIT Item is for furnishing repair parts to the DOT for the installed High Tension Cable Guardrail system. Spare Part Kits shall be delivered to the location specified by the Engineer, but will most likely be the nearest maintenance facility in both Iowa City and the Quad Cities. Spare parts kits for high tension cable guardrail shall consist of the following: - an extra supply of TL-4 posts (socketed-type), including post hardware and accessories (caps, reflective sheeting, straps, spacers, and socket covers). This supply shall include enough materials to complete a 300 foot installation. - an extra supply of anchor posts (socketed-type), including post hardware and accessories (caps, reflective sheeting, straps, spacers, and socket covers). This supply shall include enough materials to complete one end anchor installation. - specialized tools necessary to maintain the guardrail, such as a spreader tool. Spare parts kits shall not include a tension meter. MEASUREMENT: Then Engineer will count the number of SPARE PART KITS delivered. PAYMENT: The Contractor shall be paid the contract unit price for delivery of each SPARE PART KIT.
15 22	2509-0000016 2528-8400048	TEMP CRASH CUSHION, SEVERE USE (SU) TEMP BARRIER RAIL, CONC Items are for traffic control at various locations. Refer to tabulations 108-33 and 108-30 for locations and details. Refer to site detail sheets for specific site requirements.
16	2401-7207010	REMOVAL OF PAVEMENT Item is for the removal of curbed shoulder pavement. Refer to tabulation 110-1 for location and details. Refer to site detail sheets for specific requirements.
19 20	2524-9080290 2524-9280426	CONC FOOTING-BRKWY SIGN POST, 2'8"X9' STEEL BRKWY POST-TYPE B SIGN, W12X26 Items are for the installation of Side of Road DMS signs on steel posts, and for the installation of relocated Type B signs. Refer to tabulation TYPE-B for locations and details. Refer to site detail sheets for specific site requirements.
21	2524-9380001	TYPE B SIGN, EXTRUDED ALUM STRUCT PANEL Item is for the fabrication and installation of new Type B guide signs. Refer to tabulation TYPE-B for locations and details. Refer to site detail sheets for specific site requirements.
23 24	2528-8445110 2533-4980005	TRAFFIC CONTROL MOBILIZATION
27	2599-9999005	DMS INSTALLATION, 125 X 27 PIXEL, LARGE The work performed under this bid item shall consist of furnishing all labor, apparatus, and materials to construct, install, and place in operation, a complete dynamic message sign (DMS) system. The Contractor shall furnish and install all components of the system not furnished by the DOT or utility company serving the DMS system, including all incidental items appurtenant to the operation of the system. For general purposes, the installation of the DMS includes, but is not limited to: - attaching the DMS to the sign truss, - installation of the utility pole including conduit, meter socket, disconnect, and all incidental items appurtenant to the electrical service, - connection of the electrical service from the utility pole to the DMS master power panel including conduit and cabling, - construction of the control cabinet footing, - installation of the conduit between the sign truss footing and the control cabinet footing, - installation of the control cabinet and control cabinet equipment, - and installation of the wiring between the DMS and the control cabinet including two branch circuits and two communication cables. For this project, the Large DMS vendor is Daktronics, Inc. of Brookings, South Dakota. The following items will be provided by the DOT, or the DMS vendor: DMS, DMS-to-sign truss attachment brackets, control cabinet, control cabinet equipment, and communication cables to connect the DMS to the control cabinet equipment. All arrangements to initiate and accept delivery of the DOT furnished equipment shall be coordinated with the Engineer. Delivery shall be witnessed by the Engineer, and proof of delivery shall be required for all items. Proof of delivery shall consist of an invoice that clearly identifies each item being delivered, initialed by the accepting party, the delivering party, and the witness. Upon acceptance of equipment, the Contractor shall be 100% liable for safe handling, storage, and installation of the equipment. Any damaged equipment shall be replaced at the Contractor*s expense, without additional compensation.

Item No.	Item Code	Description
27	2599-9999005	DMS INSTALLATION, 125 X 27 PIXEL, LARGE (CONT'D) MEASUREMENT: Then Engineer will count the number of Large DMS signs installed. PAYMENT: The Contractor shall be paid the contract unit price for each Large DMS sign installed.
28	2599-9999005	DMS INSTALLATION, 55 X 27 PIXEL, SMALL The work performed under this bid item shall consist of furnishing all labor, apparatus, and materials to construct, install, and place in operation, a complete dynamic message sign (DMS) system. The Contractor shall furnish and install all components of the system not furnished by the DOT or utility company serving the DMS system, including all incidental items appurtenant to the operation of the system. For general purposes, the installation of the DMS includes, but is not limited to: - attaching the DMS to the steel posts or sign truss, as specified in the plans, - installation of the utility pole including conduit, meter socket, disconnect, and all incidental items appurtenant to the electrical service, - connection of the electrical service from the utility pole to the DMS master power panel including conduit and cabling, - construction of the control cabinet footing, if required, - installation of the conduit between the sign truss footing and the control cabinet footing, if required, - installation of the control cabinet and control cabinet equipment, - and installation of the wiring between the DMS and the control cabinet including two branch circuits and two communication cables. For this project, the Small DMS vendor is Skyline Products, Inc. of Colorado Springs, Colorado. The following items will be provided by the DOT, or the DMS vendor: DMS, DMS-to-sign truss attachment brackets and/or DMS-to-Post attachment hardware, control cabinet, control cabinet equipment, and communication cables to connect the DMS to the control cabinet equipment. All arrangements to initiate and accept delivery of the DOT furnished equipment shall be coordinated with the Engineer. Delivery shall be witnessed by the Engineer, and proof of delivery shall be required for all items. Proof of delivery shall consist of an invoice that clearly identifies each item being delivered, initialed by the accepting party, the delivering party, and the witness. Upon acceptance of equipment, the Contractor shall be 100% liable for safe handling, storage, and installation of the equipment. Any damaged equipment shall be replaced at the Contractor*s expense, without additional compensation. MEASUREMENT: Then Engineer will count the number of Small DMS signs installed. PAYMENT: The Contractor shall be paid the contract unit price for each Small DMS sign installed.
29	2599-9999005	REMOVE & REINSTALL TYPE B SIGN This item shall consist of removal and reinstallation of Type B signs. Refer to tabulation REMOVAL for locations and details. The Contractor shall remove each Type B sign and the hardware used to secure the sign to another sign, posts, or sign support structure. For signs mounted directly to posts, removal of the sign shall include removal of the posts. Post may be either wood posts or steel breakaway sign posts. The removal of concrete footings for steel breakaway sign posts shall be paid for separately. Holes remaining from the removal of wood posts shall be backfilled with suitable earth to the original level or to the natural ground surface in accordance with Article 2402.09. All steel posts removed shall become the property of the Contractor. Unless otherwise noted, wood posts removed shall remain the property of DOT. The Contractor shall deliver the wood posts to a DOT storage area within 50 miles, as designated by the Engineer. Unless otherwise noted, the existing Type B sign shall remain in place until the new posts or sign support structure is installed. When noted in the plans, the existing Type B sign shall be removed and stored. The Contractor shall remove the sign and transport it to a DOT storage area within 50 miles, as designated by the Engineer. The Contractor shall transport the sign back to the job site when ready for reinstallation. The Contractor shall reinstall the Type B sign. The Contractor shall furnish all necessary hardware to install the signs as shown in the plans. When the new installation is similar to the original installation, unless otherwise noted, the existing hardware may be used to reinstall the sign. Signs damaged by the Contractor*s activities shall be replaced at the Contractor*s expense. Replacement materials shall be new. The DOT will furnish all details necessary for fabrication of the replacement materials. Measurement: The Engineer shall count each Type B sign removed and reinstalled. Payment: For each Type B sign removed and reinstalled, the Contractor shall be paid the contract unit price. This payment shall be full compensation for furnishing all material, equipment, and labor and for the performance of all work necessary for removal and reinstallation of each Type B sign, including all details necessary to provide the Type B sign complete and erected in place.

ESTIMATE REFERENCE INFORMATION
100-4A
10-29-02

Item No.	Item Code	Description
30	2599-9999005	REMOVE TYPE B SIGN This item shall consist of removal of Type B Sign Assemblies from the project. Refer to tabulation REMOVAL for locations and details. A Type B Sign Assembly is defined as the primary Type B sign, all auxiliary Type B signs and brackets, and the posts. Posts may be either wood posts or steel breakaway sign posts. The concrete footings for steel breakaway sign posts are not considered part of the Type B Sign Assembly. The Contractor shall remove each sign assembly identified in the plans. Unless otherwise noted, all Type B signs, installation hardware, and wood posts shall remain the property of the DOT. All steel posts removed shall become the property of the Contractor. The Contractor shall deliver the removed signs, installation hardware, and wood posts to a DOT storage area within 50 miles, as designated by the Engineer. Each sign assembly shall be completely disassembled prior to delivery to the DOT. The Contractor shall unbolt all extruded aluminum panels, installation hardware, and posts from each other. Care should be taken not to damage the disassembled materials. Holes remaining from the removal of wood posts shall be backfilled with suitable earth to the original level or to the natural ground surface in accordance with Article 2402.09. Measurement: The Engineer will count each Type B Sign Assembly removed. Payment: For each Type B Sign Assembly removed, the Contractor shall be paid the contract unit price. This payment shall be full compensation for furnishing all material, equipment, and labor and for the performance of all work necessary for removal of the Type B Sign Assembly from the project and for any backfilling made necessary by these operations.
31	2599-9999005	REMOVE & REINSTALL TYPE A SIGN This item shall consist of removal and reinstallation of Type A signs. Refer to tabulation REMOVAL for locations and details. The Contractor shall remove each Type A sign and the hardware used to secure the sign to another sign, special mounting bracket, or posts. For signs mounted directly to posts, removal of the sign shall include removal of the posts. Post may be either wood or other material. Holes remaining from the removal of wood posts shall be backfilled with suitable earth to the original level or to the natural ground surface in accordance with Article 2402.09. All non-wood posts removed shall become the property of the Contractor. Unless otherwise noted, wood posts removed shall remain the property of DOT. The Contractor shall deliver the wood posts to a DOT storage area within 50 miles, as designated by the Engineer. Unless otherwise noted, the existing Type A sign shall be removed and promptly reinstalled. The Contractor shall reinstall the Type A sign. The Contractor shall furnish all necessary hardware to install the sign as shown in the plans. When the new installation is similar to the original installation, unless otherwise noted, the existing hardware may be used to reinstall the sign. Signs damaged by the Contractor*s activities shall be replaced at the Contractor*s expense. Replacement materials shall be new. The DOT will furnish all details necessary for fabrication of the replacement materials. Measurement: The Engineer shall count each Type A sign removed and reinstalled. Payment: For each Type A sign removed and reinstalled, the Contractor shall be paid the contract unit price. This payment shall be full compensation for furnishing all material, equipment, and labor and for the performance of all work necessary for removal and reinstallation of each Type A sign, including all details necessary to provide the Type A sign complete and erected in place.
36	2599-9999018	HMA MOW STRIP This item shall consist of installing a Hot Mix Asphalt pad along the installation line of a High Tension Cable Guardrail installation. The HMA mow strip is intended to prevent the accumulation of debri and vegetation which may interfere with the function and/or maintenance of the installation. The HMA mix shall conform to the requirements of temporary/detour pavment and shall be 6" thick unless otherwise indicated. Refer to typical 7199 for locations and details. Measurement: The Engineer shall measure the area of the HMA Mow Strip installed. Payment: The Contractor shall be paid the contract unit price for the area installed. This payment shall be full compensation for furnishing all material, equipment, and labor and for the performance of all work necessary to provide a finished mow strip.

ESTIMATE REFERENCE INFORMATION

100-4A
10-29-02

Item No.	Item Code	Description
25 26 32 34 35	2599-9999003 2599-9999003 2599-9999005 2599-9999009 2599-9999009	IL - CONCRETE FOUNDATION IL - DRILLED SHAFT CONCRETE FOUNDATION IL - TRAFFIC CONTROL & PROTECTION IL - OVERHEAD SIGN STRUCTURE, TYPE III-A IL - OVERHEAD SIGN STRUCTURE WALKWAY These items are for the construction of two overhead trusses to support two overhead DMS signs in Illinois, Site/DMS #68 and Site/DMS #70. The plan details for these sites were furnished by the Illinois DOT. All necessary specifications and details have been included in the plan set and special provision.
33	2599-9999005	IL - IMPACT ATTEN, FULLY REDIR, WIDE, TL 3 This item is for protecting the median footing at Site/DMS #??. The plan details for this site were furnished by the Illinois DOT. This item shall consist of furnishing and installing impact attenuators of the category and test level specified. Materials shall meet the requirements of the manufacturer. Impact attenuators shall meet the testing criteria contained in National Cooperative Highway Research Program (NCHRP) Report 350 for the test level specified and shall be on the Illinois' approved list. Fully redirective and partially redirective attenuators shall also be designed for bi-directional impacts. Regrading of slopes or approaches for the installation shall be as per the manfacturers requirements. Attenuator bases, when required by the manufacturer, shall be constructed on a prepared subgrade according to the manufacturer's specifications. The surface of the base shall be slightly sloped or crowned to facilitate drainage. For sand modules, the perimeter of each module and the specified weight of sand in each module shall be painted on the surface of the base. Impact attenuators shall be installed according to the manufacturer's specifications and include all necessary transitions between the impact attenuator and the item to which it is attached. Measurement: This item shall be measured for payment as each, where each is defined as one complete installation. Payment: This item shall be paid for at the contract unit price per each for IMPACT ATTENUATORS (FULLY REDIRECTIVE, WIDE), of the test level specified. Regrading of slopes or approaches will not be paid for separately. This work shall be included in the price bid.

SIGNING NOTES

SIGN-NOTE
09-25-02

SIGN INSTALLATION QUALTIY CONTROL NOTES

Post lengths have been derived from the proposed grading cross sections and shall be field verified.

Sleight differences between the design template and the actual field conditions should be expected. These variations should be resolved by doing some localized grading and shaping. Material needed to meet the site requirements of RD-21A and RD-22A should be obtained from the footing excavation and/or the area immediately adjacent to the footing. Any reshaping work shall not substantially change the foreslopes or the drainage in the vicinity of the sign.

Significant differences between the design template and the actual field conditions need to be resolved in this manner. The location shall be surveyed and the actual template drawn on the cross section. Each post length shall be recalculated and compared to the maximum allowable leg length. If all of the leg lengths are less than or equal to the maximum allowable leg length, then the proposed post design will be sufficient. If any leg is greater than the maximum allowable leg length, then the cross section with the actual template drawn (including offsets and elevation from the survey shown) shall be submitted to the Engineer. The Engineer may forward this information on to the design Engineer in order to complete a new post design.

The Contractor shall install the footings & stub posts, and posts in accordance with the following tolerances:

-the elevation difference from the edge of pavement to the bottom of the sign shall be ±6 inches (150 mm) the dimension shown.

-the elevation difference between the top of the highest post and the lowest post at a site shall be less than 2 inches (50 mm).

Footing construction is the controlling activity that substantially affects the quality of the site installation. It is imperative that the elevation difference between the stubs is exactly the same as the elevation difference between the post lengths. The Contractor shall, upon request by the Engineer, submit documentation detailing the site field shots in order to verify site installation.

SIGNING NOTES

SIGN-NOTE
09-25-02

GENERAL:

Materials and construction shall conform to the requirements of the applicable sections of the "Iowa Department of Transportation Standard Specifications for Highway and Bridge Construction, series 2001" plus General Supplemental Specifications; and applicable Supplemental Specifications, Developmental Specifications, and Special Provisions.

The exact location of installation for any item is subject to approval by the engineer.

Before excavation, the contractor shall check for the locations of utilities, drainage structures and other facilities in the construction area. Any damage to such facilities due to the contractor's activities shall be repaired at his expense.

During construction of this project the contractor will be required to coordinate his operations with those of other contractors working within the same area.

The following shall apply for both English and Metric projects.

All sign details shown in the plans are in English units because the signs are manufactured using English units. If the project is in Metric units, the outside dimensions of each sign are shown in both units.

All bid quantities have been shown in the units of the project.

The following tolerances will be allowed on all signs:

Accumulation error of not greater than +/- 0.50" per line of copy, not greater than +/- 0.50" for spacing between lines of copy, and the margin between lines of copy and the inside edge of the sign border.

The following tolerances will be allowed on each letter or numeral: (The measurements will be made to the nearest*".)

nominal height	variation in height	variation in width
4" thru 12"	-1/8" to +3/8"	-1/4" to +1/4"
over 12"	-1/8" to +3/8"	-3/8" to +3/8"

Type B signs can be separated into two categories:
Major Guide Signs, and
Minor Guide Signs

Major Guide Signs include the advance and exit direction guide signs for an interchange or intersection.

Minor Guide Signs include all other guide signs such as next exits signs, supplemental guide signs, logo signs, exit gore signs, post-interchange mileage signs, ramp destination signs, and ramp logo signs for an interchange; and destination signs along sideroads.

Type A signs are not separated into categories, but special consideration should be given to regulatory signs.

Existing Type B signs shall remain in place until the new replacement signs are installed. If construction activities require the removal of a sign prior to installation of the replacement sign, the existing sign may be relocated to temporary posts, or a temporary plywood sign may be installed to replace the existing sign.

Existing non-regulatory Type A signs are NOT required to remain in place until installation of a replacement sign. Existing regulatory Type A signs, particulary Stop signs, should not be removed until the replacement sign is installed. This guideline may not apply if the traffic control plans have sufficient temporary signing.

During the replacement or modification of signs, no more than one of the major guide sign for each direction of travel at an interchange shall be out of service at any one time. No major guide sign shall be out of service for more than 8 hours. Minor guide signs shall not be out of service for more than 24 hours.

Existing signs and posts shall be removed within 24 hours following the installation of a new replacement sign.

SIGNING NOTES

SIGN-NOTE
09-25-02

In any case where the plans call for a new sign and posts to be installed at the same station location and offset as an existing sign, the new posts will be installed at a minimum of either 5 ft (1.5 m) ahead or behind the existing sign installation. Whenever posts for a replacement sign are erected directly in front of an existing sign, the new replacement sign shall be installed and the existing sign installation shall be removed within 24 hours of the time that the new posts are erected.

Where signs are located behind guardrail, the near edge of the sign shall be a minimum of 3 ft (1 m) behind the guardrail posts. The engineer may approve reducing this distance to a minimum of 1 ft (0.3 m) where field conditions warrant.

Unless otherwise noted, auxiliary panels such as exit number panels shall remain or be reattached to the sign using the existing mounting hardware. Also, when replacing an existing logo sign with a new logo sign, the business logo panel(s) will be removed from the existing sign and attached to the new sign as directed by the engineer. Care should be taken to prevent damage to the auxiliary or logo panels when removing and reattaching them. This work shall be considered incidental and no separate payment will be made.

In the location columns of Tabulation TYPE-B, the following symbols are used:
(R) = Ramp
(X) = Crossroad/Intersecting Road at Interchange
(M) = Metric Station Number
(L) = Left Side of Roadway

The following notes shall apply to the corresponding sign installations shown on the plan sheets and listed in the tabulations.

IB INSTALL NEW TYPE B SIGN
IA INSTALL NEW TYPE A SIGN

The Contractor shall install new signs at the locations identified in the plans.

For installation of new signs on existing posts:

- if the new sign is taller than the existing sign, the Contractor shall furnish the necessary hardware to extend the sign above the posts. Refer to Standard Road Plan RD-31.

- if the new sign is shorter that the existing sign,

  for wood posts, the Contractor shall install the sign at the proper height and cut off the excess post length.

  for steel posts, the Contractor shall install the sign at the top of the posts.

For installation of new signs on an existing sign support structure, refer to note (L).

All costs incurred for mounting hardware, extension of signs above existing posts, and cutting off wood posts shall be considered incidental to the price bid for Type A or Type B signs.

MS MODIFY EXISTING SIGN ASSEMBLY

The Contractor shall modify the copy on the existing sign as shown in the plan.

Existing copy which is removed shall delivered to a DOT storage area within 50 mi (80 km), as designated by the Engineer.

The Contractor shall install the new copy as needed to make the sign modifications.

All costs for copy removal, delivery to a DOT storage area, and installation of new copy shall be included in the price bid for sign modification.

SIGNING NOTES

SIGN-NOTE
09-25-02

MB INSTALL SPECIAL MOUNTING BRACKET

Special mounting brackets shall be installed at the locations identified in the plans. Refer to the tabulations TYPE-A, MILEPOST, and/or MNT-BRK details.

PW INSTALL NEW WOOD POSTS
PB INSTALL NEW BREAKAWAY STEEL POSTS AND FOOTINGS

New wood posts or breakaway steel posts and footings shall be installed at the locations indicated in the plans. Refer to tabulations TYPE-A and TYPE-B for post size and footing information.

If note (RR) accompanies either (PW) or (PB), an existing sign will be installed on the new posts.

RR REMOVE AND REINSTALL EXISTING SIGN:

Existing major Type B guide signs on posts shall not be removed until the new posts are installed. Then the sign shall be removed and promptly installed at the new location.

Existing major Type B guide signs on overhead support structures, minor Type B guide signs, plywood signs, and Type A signs may be removed and stored. The Contractor may remove the signs and transport them to a DOT storage area within 50 mi (80 km), as designated by the Engineer. The Contractor shall transport the signs back to the job site when ready for installation at the new location.

Signs damaged by the Contractor's activities shall be replaced at the Contractor's cost.

All costs for the sign removal, delivery to the DOT storage area (if applicable), and reinstallation shall be included in the price bid for remove and reinstall existing sign.

RA REMOVE EXISTING TYPE A SIGN ASSEMBLY
RB REMOVE EXISTING TYPE B SIGN ASSEMBLY

A Type A Sign Assembly consists of
- one or more signs,
- installed on one or more wood posts,
- either directly mounted to the post, or mounted to the post with special sign mounting brackets.

A Type B Sign Assembly consists of
- the main sign,
- all auxiliary signs and brackets, and
- the wood or steel posts.

Unless stated otherwise in the plans, all posts shall be removed with the signs and brackets.

The Contractor shall remove each sign assembly identified in the plans. Steel posts removed shall become the property of the Contractor. All other materials removed shall remain the property of the DOT.

Each sign assembly removed, shall be disassembled before delivery to the DOT. For Type A sign assemblies, the Contractor shall unbolt all signs, special mounting brackets, and posts from each other. For Type B sign assemblies, the Contractor shall unbolt all extruded aluminum panels, brackets, and posts from each other. Care should be taken not to damage the disassembled materials.

Holes remaining from the removal of wood posts shall be backfilled and restored to the normal surrounding conditions. This work shall be considered incidental and no separate payment will be made.

The Contractor shall deliver the removed signs, special sign mounting brackets, extruded aluminum panels, and wood posts to a DOT storage area within 50 mi (80 km), as designated by the Engineer.

SIGNING NOTES

SIGN-NOTE
09-25-02

The concrete footings for steel posts are not considered part of the sign assembly.

All costs for the sign assembly removal and disassembly, post removal (if applicable), restoration of the surrounding conditions, and delivery to the DOT storage area shall be included in the price bid for removal of sign.

RF REMOVE EXISTING CONCRETE FOOTING FOR STEEL POST

Existing concrete footings shall be removed to a depth of 1 ft (0.3 m) below ground. The remaining holes shall be backfilled and restored to the normal surrounding conditions. This work shall be considered incidental and no separate payment will be made.

RS REMOVE EXISTING TYPE B SIGN SUPPORT STRUCTURE

The following are considered Type B Sign Support Structures:

- overhead sign truss and footings,
- cantilevered sign truss and footing, or
- bridge mounted brackets.

For removal purposes, wood and steel posts are not considered Type B Sign Support Structures.

Unless otherwise directed in the plans, the existing overhead trusses, cantilevered trusses, and bridge brackets, which are removed, shall become the property of the Contractor. If stated in the plan, the Contractor shall deliver the overhead trusses, cantilevered trusses, and bridge brackets to a DOT storage area within 50 mi (80 km), as designated by the Engineer.

All costs for the sign support structure removal, delivery to the DOT storage area (if applicable), and restoration of the surrounding conditions shall be included in the price bid for removal of sign support structure and footing.

L MODIFY SIGN SUPPORT ANGLES NEEDED TO INSTALL SIGNS ON EXISTING SIGN SUPPORT STRUCTURES

Refer to the sign support structure details for information on the required angle brackets.

Provided all specifications are met, the existing sign support angles may be reused. Existing sign support angles to be reused shall only be installed on the sign support structure from which they were removed.

Any sign support angles removed and not reused shall become the property of the Contractor.

When reusing the existing sign support angles with a shorter replacement sign, the sign support angles may need to be trimmed. Refer to the sign support structure details to determine if and where to trim the sign support angles.

Existing fasteners shall not be reused. New stainless steel bolts and nuts shall be used to install the existing or new sign support angles to the sign support structure.

Payment will not be made for the removal of existing sign support angles. This work shall be included in the price bid for removal of the sign.

Payment will not be made for reinstallation, and/or modification of existing sign support angles; furnishing and installation of new sign support angles (if required); and furnishing and installation of new fasteners. This work shall be included in the price bid for Type B signs.

TABULATION OF MATERIALS FOR OVERHEAD SIGN SUPPORT STRUCTURES

OVERHEAD
09-25-02

STRUCTURE TYPE/LENGTH	LOCATION		DIR OF TRAVEL	LEFT FOOTING OFFSET (Ft)	RIGHT FOOTING OFFSET (Ft)	DIMENSION 'L'		FOOTING TYPE (SEE ROAD STANDARD)	FOUNDATION QUANTITIES			
									EXCAVATION (CLASS 20) (Cu Yd)	REINFORCING		STRUCTURAL CONCRETE (Cu Yd)
	MILEPOST	STATION				LEFT (Ft)	RIGHT (Ft)			STEEL (Lb)	EPOXY-COATED STEEL (Lb)	
Iowa City												
Site #4 - 70'		802+00	WB	0	70	3	4		71.1		4129	41.46
Site #6 - 80'		264+00	NB	0	80	2	1		80.7		3741	37.38
Quad Cities												
Site #12 - 85'		2137+75	EB	0	85	4	0		94.1		3838	38.4
Site #12 - 85'		2143+75	EB	0	85	4	0		94.1		3838	38.4
TOTALS									340	0	15546	155.64

NOTE: The 'L' dimention and the quantities shown in the table above are for estimating purposes only. The Contractor will verify the 'L' dimension based on actual field conditions and foreslopes before ordering any material to construct the footings.

HIGH TENSION CABLE GUARDRAIL

108-9A
12-02-06

(1) Lane(s) to which the installation is adjacent.

Refer to Standard Road Plan RE-88.

No.	(1) Direction of Traffic	Location: Station to Station	Side	Offset D_0 Ft.	Dimensions: C_A Ft.	C_0 Ft.	C_T Ft.	Protection Length ($C_A+C_0+C_T$) Ft.	End Anchor No.	Remarks
	Site #6									
	NB	262+06.3 to 264+05.7	Rt	2	187.9	11.5		199.4	2	
	NB	262+30.0 to 264+05.7	Median	12	164.2	11.5		175.7	2	
	SB	263+94.2 to 265+70.0	Median	12	164.3	11.5		175.8	2	
	Site #12									
	EB	2137+69.3 to 2146+34.0	Median	2	853.2	11.5		864.7	2	protects 2 sites
	WB	2135+28.2 to 2143+80.7	Median	2	841	11.5		852.5	2	protects 2 sites
								2268.1	10	
	Two (2) Spare Part Kits are required - one each for District 5 and District 6									

CONCRETE BARRIER

108-18
04-18-06

Refer to Standard Road Plans RE-44A, RE-44C, & RE-44E

No.	Station to Station		Side	Barrier Type: Standard Road Plan	Barrier Type: Length Lin. Ft.	Transition Section: Detail Sheet	Transition Section: (L)	Footing: Length Lin. Ft.	Remarks
	2137+65	Δ2138+05	EB - OUT	RE-44C	38.86				
	Δ2138+05	Δ2138+30	EB - OUT	RE-44C	26.54			26.54	

CRASH CUSHIONS

108-30
10-17-06

(1) Lane(s) to which the installation is adjacent.
(2) Complete this section when Temporary, Non-Redirective is selected.

NR - (Non-Redirective)
R - (Redirective)
SU - (Severe Use)

No.	(1) Direction of Traffic	Location Station	Side	Width (Feet)	Bid Item(s) (Select one): Temporary	Permanent	(Select all that apply): NR	R	SU	Sand-filled Barrel Array (2): (L3) Length (Feet)	(X) Length (Feet)	(Y) Length (Feet)	(Z) Length (Feet)	Embankment in Place (Cu. Yds.)	Remarks
		Site #12													
	EB	2139+08.8	Rt		x				x						
			Totals		1										

TEMPORARY BARRIER RAIL

108-33
10-17-06

Refer to Standard Road Plan RE-71.

* Not a bid item

No.	Station To Station		Length Lin. Ft.	* Tie Downs: Type 1	Type 2	Type 3	Remarks
	Site #4						
	800+90.0	803+52.4	262.5				
	Site #12						
	2137+60	2138+81.1	125				
			387.5				

TABULATION OF MATERIALS FOR TYPE 'B' SIGNS

TYPE-B
08-22-06

NO.	SIGN NUMBER RTE.	CO.	EXIT NO.	ROAD ID M,R,S	SEQ. NO.	DIR OF TRAVEL	SIGN LOCATION M.P.	STATION	FAB INFO	SIGN WIDTH (ft)	SIGN HEIGHT (ft)	NEW AREA (SQ. ft)	WOOD POSTS 4X6 L (ft)	M (ft)	R (ft)	STEEL BREAKAWAY POSTS W8x21 L (ft)	M (ft)	R (ft)	FOOTING 800x2250 (each)	W12x26 L (ft)	M_1 (ft)	M_2 (ft)	R (ft)	FOOTING 800x2700 (each)	INSTALLATION TYPE	DIM "X" (ft)	DIM "Y" (ft)	SEE SIGNING NOTES	REMARKS
	80				SITE 1	E		1190+00	DMS	15	9									21.008	0	0	21.298	2	1	7	30	/PB	Side of Road DMS on Posts
	80				SITE 2	E		595+00	DMS	15	9									21.258	0	0	18.598	2	1	7	30	/PB	Side of Road DMS on Posts
	80				SITE 3	W		695+50	DMS	15	9									18.458	0	0	19.838	2	1	7	10	/PB	Side of Road DMS on Posts
	80				SITE 4	W		802+00	DMS	29.25	7.833																		Overhead DMS on Truss
	80	52	240	M	30	W		810+00	reinstall	12	17									24.138	26.168	0	28.098	3	1	7	24	RR/PB	
	80				SITE 5	E		866+00	DMS	15	9									22.318	0	0	26.918	2	1	7	30	/PB	Side of Road DMS on Posts
	218				SITE 6	N		294+00	DMS	29.25	7.833																		Overhead DMS on Truss
	218				SITE 7	S		1553+00	DMS	15	9									19.358	0	0	20.928	2	1	7	30	/PB	Side of Road DMS on Posts
	380				SITE 8	N		1300+00	DMS	15	9									21.248	0	0	22.018	2	1	7	30	/PB	Side of Road DMS on Posts
	380				SITE 9	S		1300+00	DMS	15	9									18.858	0	0	20.388	2	1	7	30	/PB	Side of Road DMS on Posts
	80				SITE 10	W		1084+00	DMS	15	9									19.348	0	0	18.248	2	1	7	30	/PB	Side of Road DMS on Posts
	74	82	2	M	19	E		2236+00	reinstall	19	12									19.038	0	0	17.478	2	1	7	46.8	RR/PB	
	74	82	2	M	19A	E		2244+00	reinstall	22.5	10									21.448	21.448	0	21.948	3	1	7	36.25	RR/PB	
	74				SITE 11	E		2252+00	DMS	15	9									20.048	0	0	18.148	2	1	7	30	/PB	Side of Road DMS on Posts
	74	82	2	M	21	E		2260+00	reinstall	19.5	12.5									25.048	25.548	0	25.848	3	1	7	36.75	RR/PB	
	74	82	4	M	9A	E		2137+75	new	25	12.5	312.5																IB	
	74	82	4	M	MX-1				new	7	2.5	17.5																IB	
	74	82	4	M	9				reinstall	11	9																	RR	
	74	82	4	M	10	E		2143+75	reinstall																			RR	
	74				SITE 12				DMS	15	9																		Side of Road DMS on Truss
	74				SITE 404	W			DMS	15	9									22.1	0	0	25.4	2				/PB	Side of Road DMS on Posts
	74				SITE 405	W			DMS	15	9									21.2	0	0	24.1	2				/PB	Side of Road DMS on Posts
	74				SITE 406	N			DMS	15	9									17	0	0	14.5	2				/PB	Side of Road DMS on Posts
	280				SITE 407	E			DMS	15	9									21.9	0	0	24.4	2				/PB	Side of Road DMS on Posts
				TOTALS								330	0	0	0	0	0	0	0	353.774	73.164	0	368.154	37					

* DIMENSIONS SHOWN ARE FOR ESTIMATING PURPOSES ONLY. THE CONTRACTOR WILL VERIFY ALL DIMENSIONS IN THE FIELD BEFORE DETAILING SHOP DRAWINGS.

TABULATION OF EXISTING SIGNS TO BE REMOVED

REMOVAL
08-24-06

SIGN NUMBER OR DESCRIPTION	LOCATION STATION (approximate)	DIR OF TRAVEL	TYPE "A" SIGN ASSEMBLY (each) (RA)	TYPE "B" SIGN ASSEMBLY (each) (RB)	REMOVE & REINSTALL EXISTING SIGNS TYPE "A" (each) (RR)	REMOVE & REINSTALL EXISTING SIGNS TYPE "B" (each) (RR)	CONCRETE FOOTING (each) (PF)	SUPPORT STRUCTURE & FOOTING (each) (RS)	APPLICABLE SIGNING NOTES	REMARKS
Site #4										
80-52-30	802+00	W				1	2		RR/RF	move to Sta 810+00
80-52-31	809+00	W		1					RB	wood posts
Site #5										
Deer Crossing Warning Sign	866+00	E			1				RA	move to Sta 868+00
Site #11										
74-82-19	2237+00	E				1	2		RR/RF	move to Sta 2236+00
74-82-19A	2246+00	E				1	3		RR/RF	move to Sta 2244+00
74-82-21	2255+00	E				1	3		RR/RF	move to Sta 2260+00
Site #12										
74-82-9	2143+30	E				1		BRACKET	RR/RS	move to Sta 2137+75
74-82-10	2143+30	E				1		BRACKET	RR/RS	move to Sta 2143+75
				1	1	6	10	2		

REMOVAL OF PAVEMENT

110-1
04-19-05

* Not a Bid Item

Station to Station		Pavement Type	Area (Sq. Yds.)	Saw Cut* (Lin. Ft.)	Intakes and Utility Accesses (No.)	Remarks
2137+65	2138+10	shld	10	49		

REMOVE or REMOVE & REINSTALL BEAM GUARDRAIL

110-7A
04-19-05

① Lane(s) to which the installation is adjacent.

Location			Side	Steel Beam Guardrail		Posts		End Anchorage			Remarks
No.	① Direction of Traffic	Station		Remove (Lin. Ft.)	Remove & Reinstall (Lin. Ft.)	Remove (No.)	Remove & Reinstall (No.)	Remove (No.)	Remove & Reinstall (No.)	Type	
I-80	WB	801+75	Outside	137.5		Δ22		2	RE-33 & BCT		
I-74	EB/WB	2143+00	Median	326		Δ50		2		RE-56	old median bullnose installation

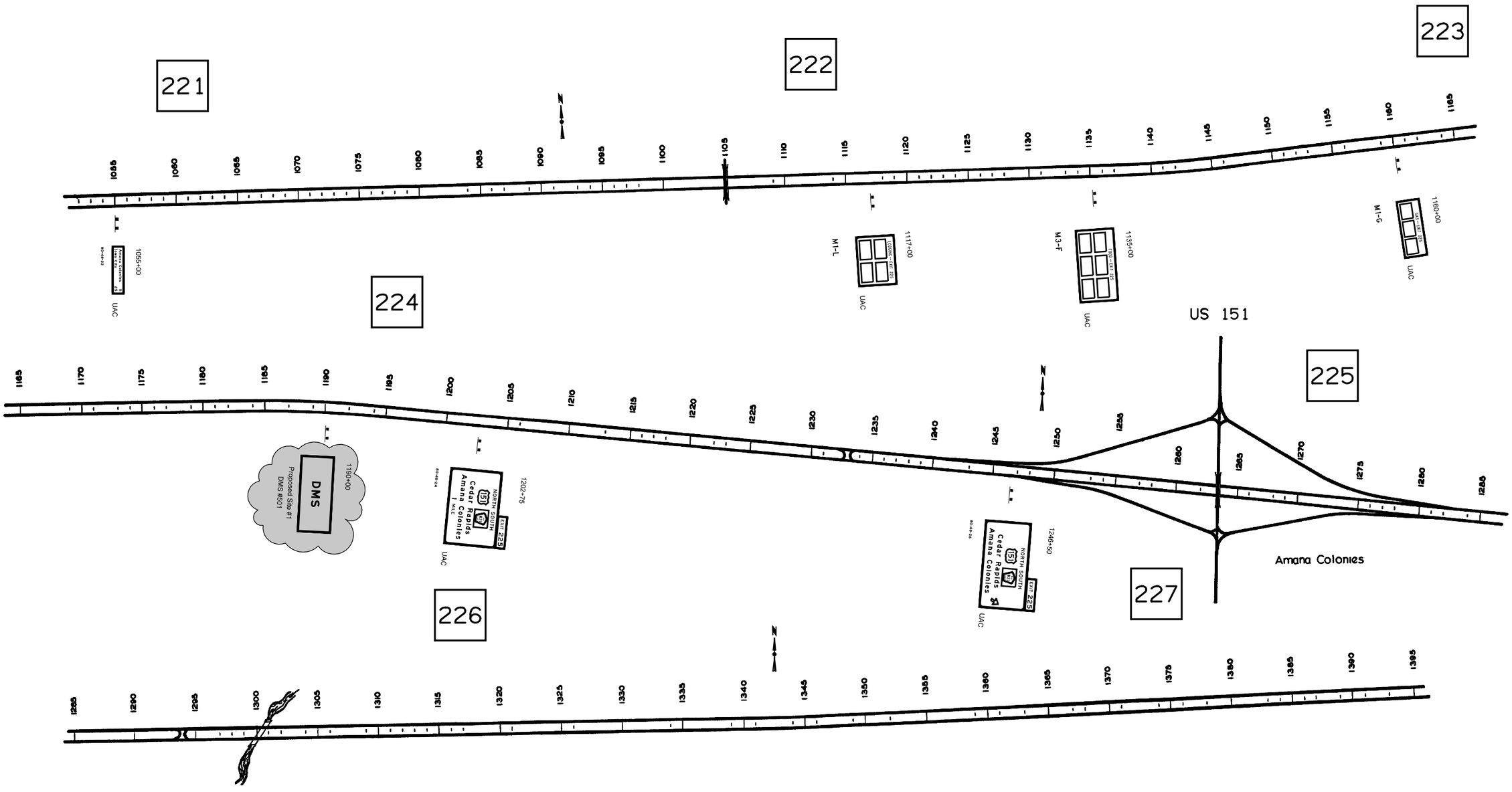

FOR INFORMATION ONLY
Not to Scale

IOWA CITY AREA
LOCATION MAPS

I-80
IOWA COUNTY

DESIGN TEAM VORTHERMS/SCHRODER	ENGLISH	IOWA DOT * OFFICE OF TRAFFIC & SAFETY	VARIOUS COUNTY	PROJECT NUMBER STP-A-000-S(330)--22-00	SHEET NUMBER N.01

29-DEC-2006 10:04 jvorthe w:\Projects\0000001005\TrafEng\00-000S-330\00000330.n01

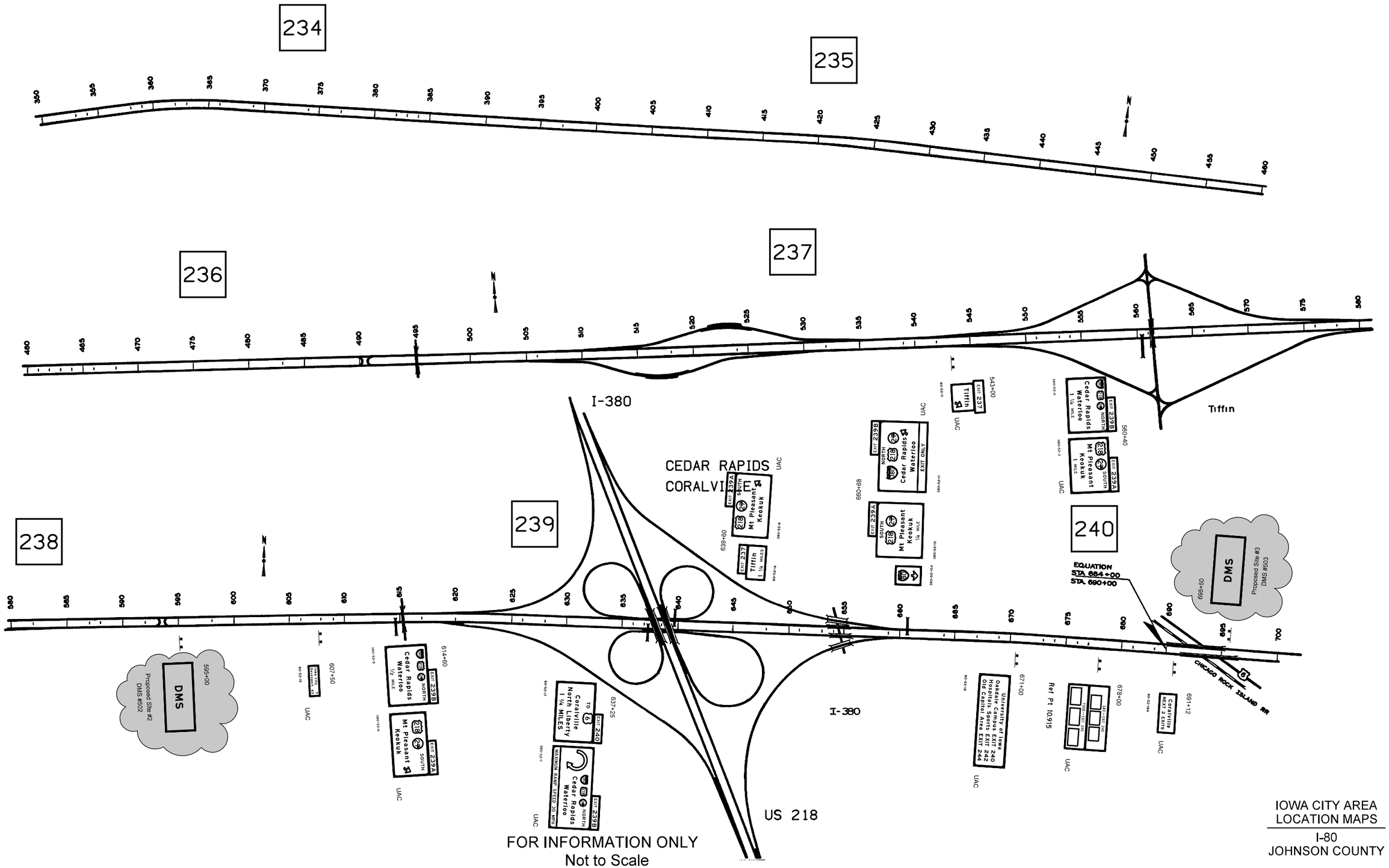

IOWA CITY AREA
LOCATION MAPS

I-80
JOHNSON COUNTY

DESIGN TEAM VORTHERMS/SCHRODER	ENGLISH	IOWA DOT * OFFICE OF TRAFFIC & SAFETY	VARIOUS COUNTY	PROJECT NUMBER STP-A-000-S(330)--22-00	SHEET NUMBER N.02

29-DEC-2006 10:05 jvorthe v:\Projects\0000001005\TrafEng\00-000S-330\00000330.n01

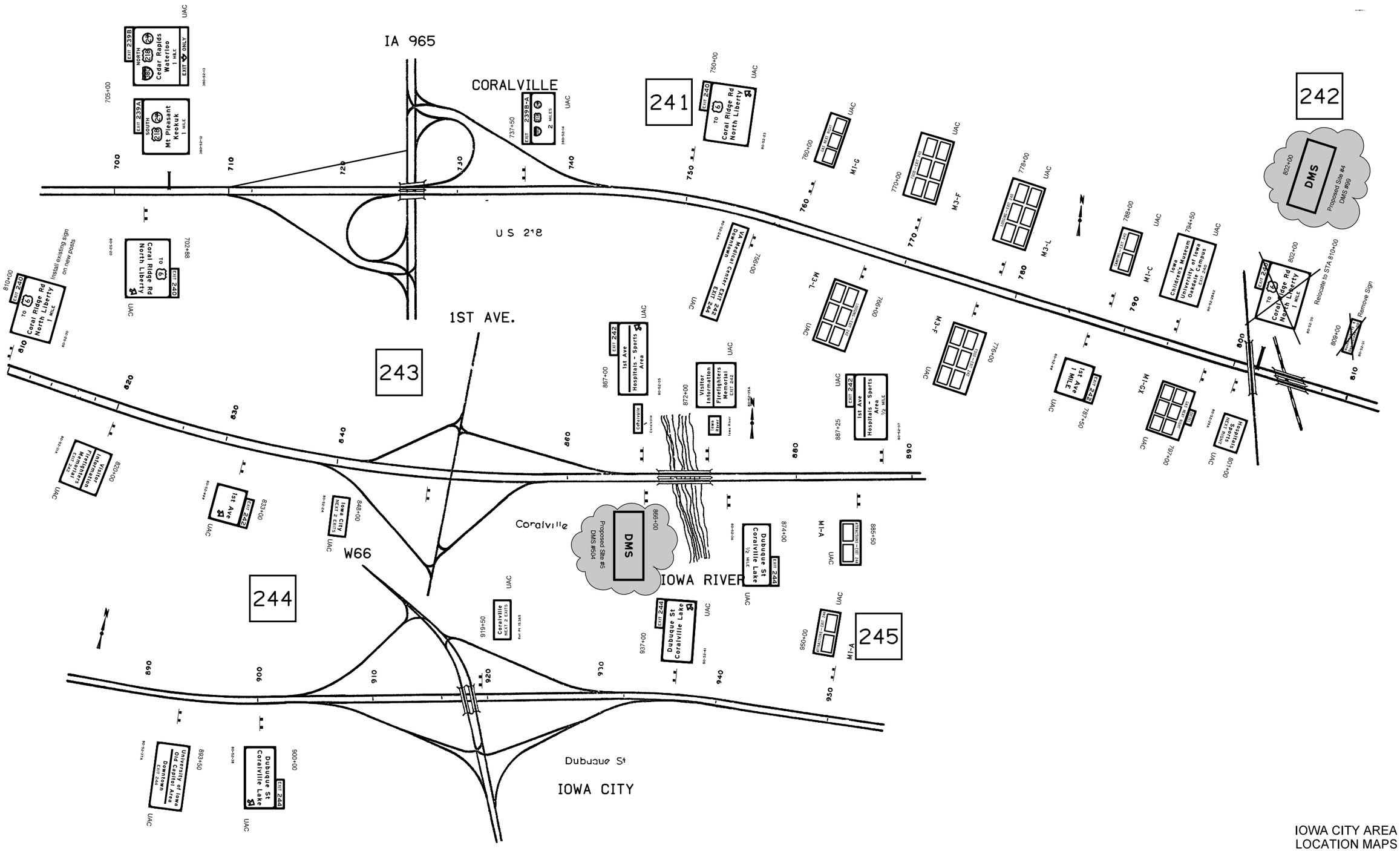

FOR INFORMATION ONLY
Not to Scale

IOWA CITY AREA
LOCATION MAPS

I-80
JOHNSON COUNTY

DESIGN TEAM VORTHERMS/SCHRODER	ENGLISH	IOWA DOT * OFFICE OF TRAFFIC & SAFETY	VARIOUS COUNTY	PROJECT NUMBER STP-A-000-S(330)--22-00	SHEET NUMBER N.03

29-DEC-2006 10:06 jvorthe w:\Projects\0000001005\TrafEng\00-000S-330\00000330.n01

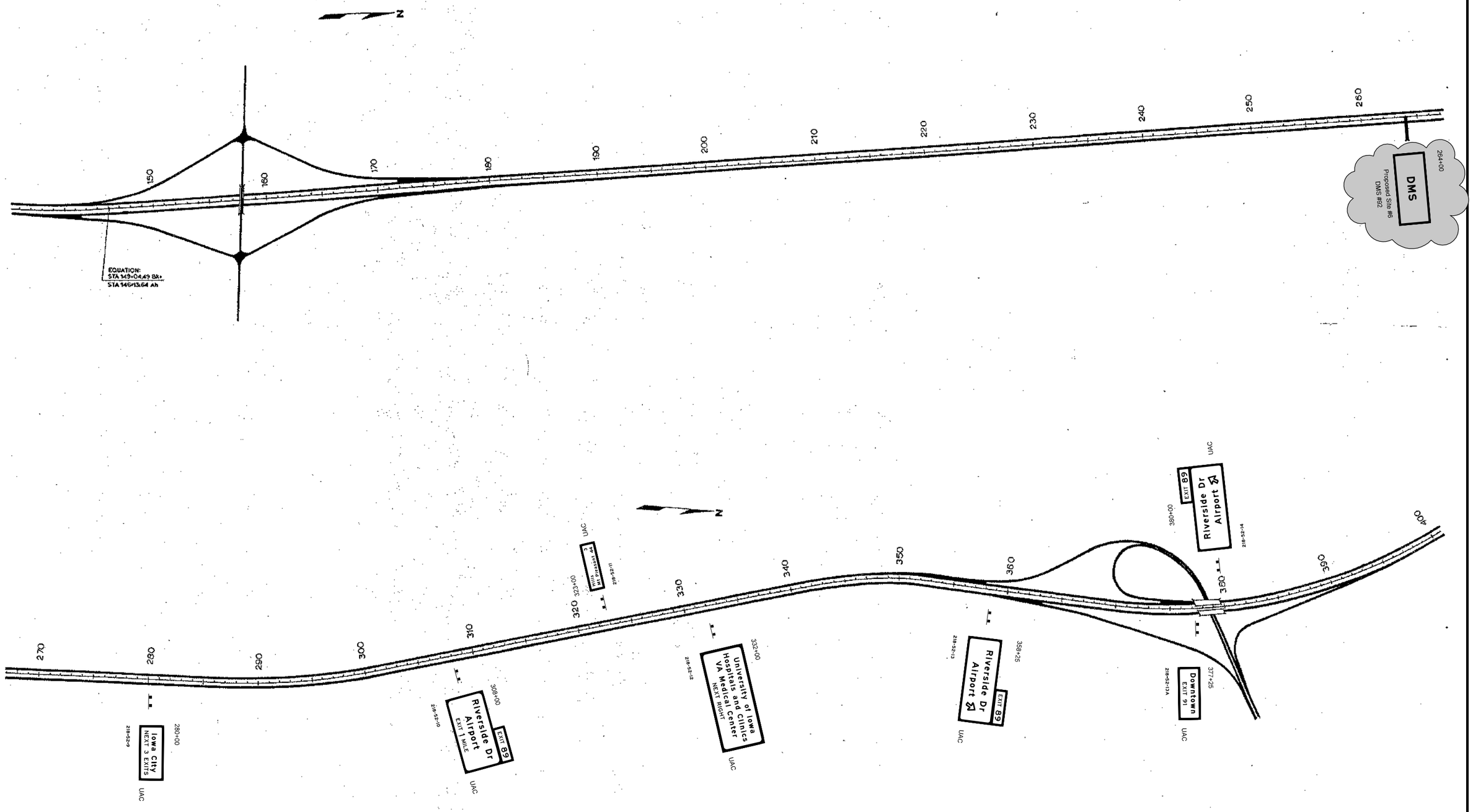

FOR INFORMATION ONLY
Not to Scale

IOWA CITY AREA
LOCATION MAPS

US 218
JOHNSON COUNTY

DESIGN TEAM VORTHERMS/SCHRODER	ENGLISH	IOWA DOT * OFFICE OF TRAFFIC & SAFETY	VARIOUS COUNTY	PROJECT NUMBER STP-A-000-S(330)--22-00	SHEET NUMBER N.04

29-DEC-2006 10:06 jvorthe w:\Projects\0000001005\TrafEng\00-000S-330\00000330.n01

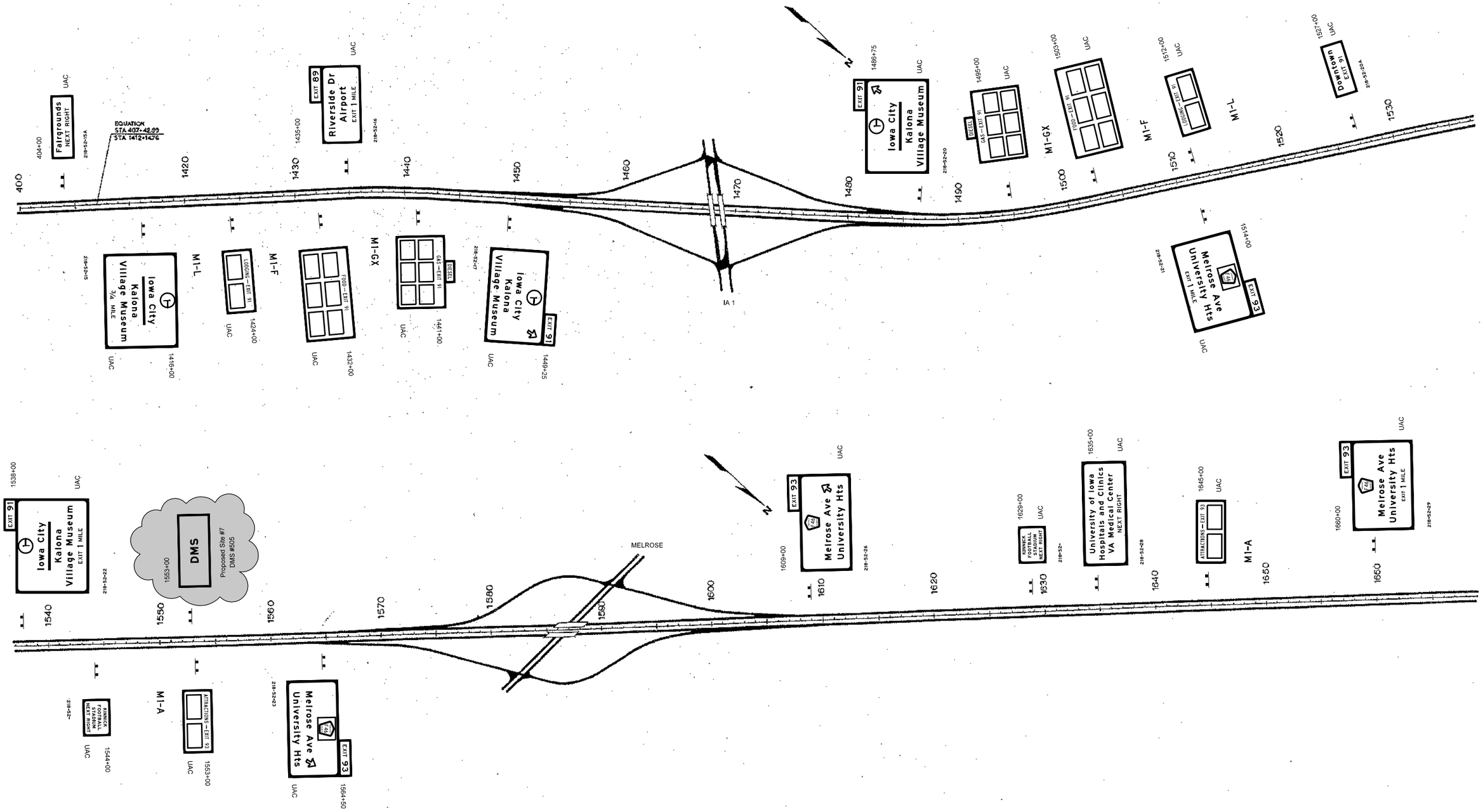

FOR INFORMATION ONLY
Not to Scale

IOWA CITY AREA
LOCATION MAPS

US 218
JOHNSON COUNTY

DESIGN TEAM VORTHERMS/SCHRODER	ENGLISH	IOWA DOT * OFFICE OF TRAFFIC & SAFETY	VARIOUS COUNTY	PROJECT NUMBER STP-A-000-S(330)--22-00	SHEET NUMBER N.05

29-DEC-2006 10:07 jvorthe w:\Projects\0000001005\TrafEng\00-000S-330\00000330.n01

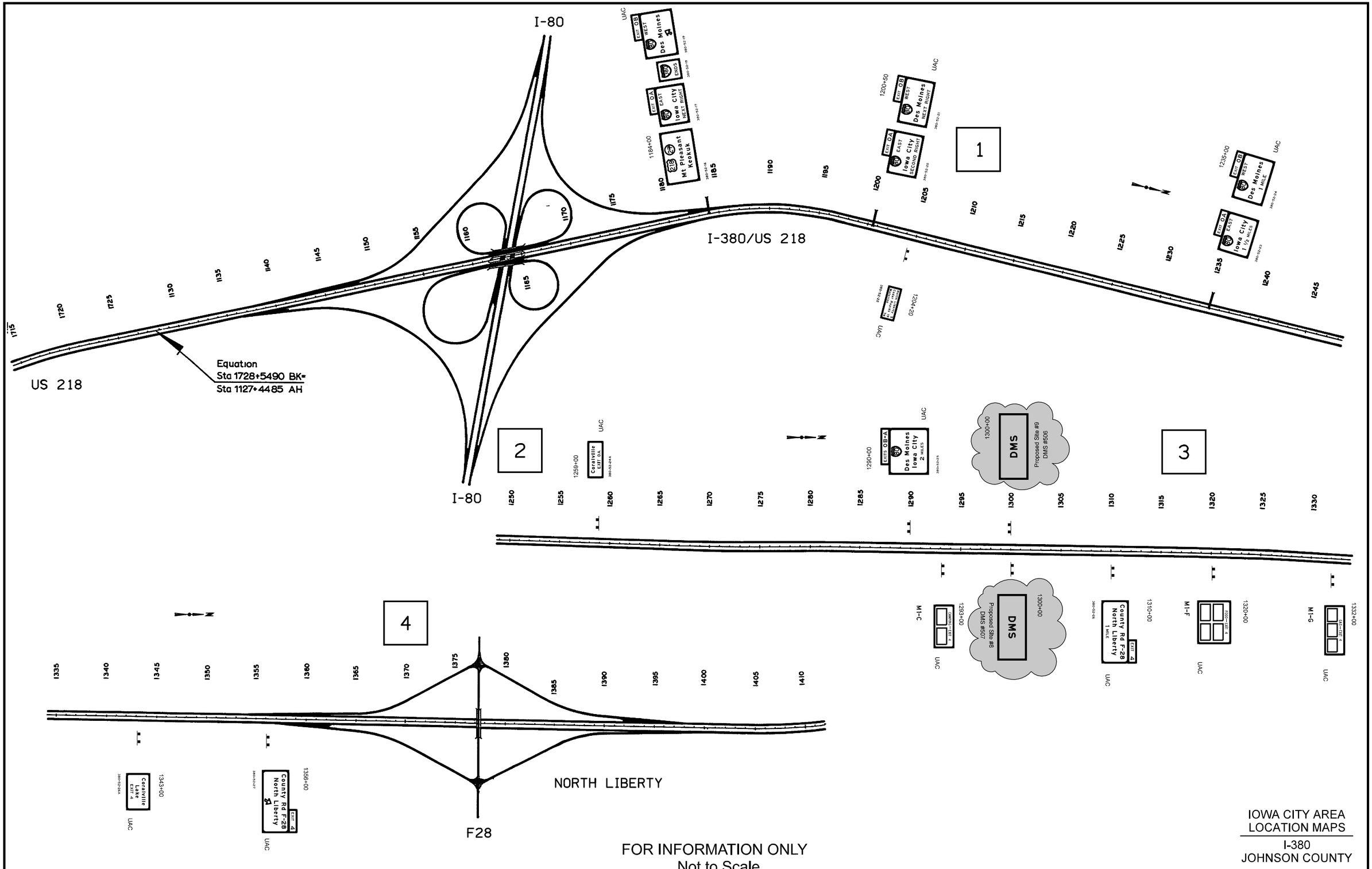

DESIGN TEAM VORTHERMS/SCHRODER	ENGLISH	IOWA DOT * OFFICE OF TRAFFIC & SAFETY	VARIOUS COUNTY	PROJECT NUMBER STP-A-000-S(330)--22-00	SHEET NUMBER N.06

29-DEC-2006 10:08 jvorthe w:\Projects\0000001005\TrafEng\00-000S-330\00000330.n01

SITE DETAILS

Site #1 is on I-80 eastbound in Iowa County at Sta 1190+00.

Site work includes the installation of a post mounted side-of-road DMS.

Location can be found using the stations stamped in the concrete along the outside shoulder.

TRAFFIC CONTROL

Shoulder closures, TC-402, shall be used for activities at this site.

Lane closures shall not be permitted at this site.

STANDARD ROAD PLANS

RD-21A	TC-1
RD-21B	TC-402
RD-22A	

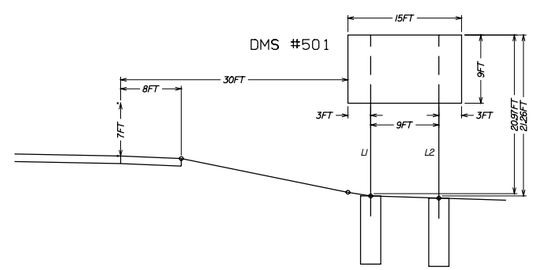

Breakaway Steel Posts, W12x26 = 42.3 ft
Concrete Footing, 2'8" x 9'0 = 2

CROSS SECTION @ STA 1190+00

shown in the direction of travel

SITE DETAILS
for SITE #1 / DMS #501
I-80 EB - IOWA COUNTY

SITE DETAILS

Site #2 is on I-80 eastbound in Johnson County at Sta 595+00.

Site work includes the installation of a post mounted side-of-road DMS.

Location can be found using the station posts alongside the roadway.

TRAFFIC CONTROL

Shoulder closures, TC-402, shall be used for activities at this site.

Lane closures shall not be permitted at this site.

STANDARD ROAD PLANS

RD-21A	TC-1
RD-21B	TC-402
RD-22A	

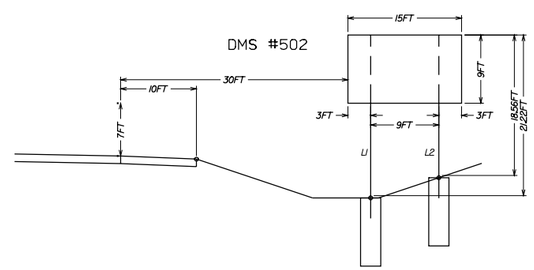

Breakaway Steel Posts, W12x26 = 39.8 ft
Concrete Footing, 2'8" x 9'0 = 2

CROSS SECTION @ STA 595+00

shown in the direction of travel

SITE DETAILS
for SITE #2 / DMS #502
I-80 EB - JOHNSON COUNTY

SITE DETAILS

Site #3 is on I-80 westbound in Johnson County at Sta 695+50.

Site work includes the installation of a post mounted side-of-road DMS.

Location is at the bridge over the railroad and US 6. Sign shall be placed adjacent to the bridge wing wall.

The existing guardrail shall not be disturbed, and will be sufficient to protect the DMS location.

TRAFFIC CONTROL

Shoulder closures, TC-402, shall be used for activities at this site.

Lane closures shall not be permitted at this site.

STANDARD ROAD PLANS

RD-21A TC-1
RD-21B TC-402
RD-22A

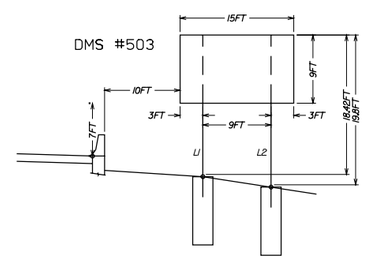

Breakaway Steel Posts, W12x26 = 38.2 ft
Concrete Footing, 2'8" x 9'0 = 2

CROSS SECTION @ STA 695+50

shown in the direction of travel

SITE DETAILS
for SITE #3 / DMS #503
I-80 WB - JOHNSON COUNTY

PROJECT COORDINATION NOTES

Contractor shall coordinate all work at this site with project number IM-80-6(219)240--13-52. This project involves installing storm sewer and paving the median on I-80. This project is referred to as the median paving project in other sections of this site plan.

The median paving project will install the temporary barrier rail needed to project the median footing. Additionally, the medain paving project will require WB traffic to be shifted outwards by 6 feet. This encroachment will restrict access to the outside footing work area, and essentially eliminate the area from any activity until traffic is restored to the normal lanes.

LEGEND

Proposed Grading

ADDITIONAL SITE REQUIREMENTS

Relocate existing guide sign from Sta 802+00 to Sta 810+00

Remove existing mileage sign at Sta 809+00

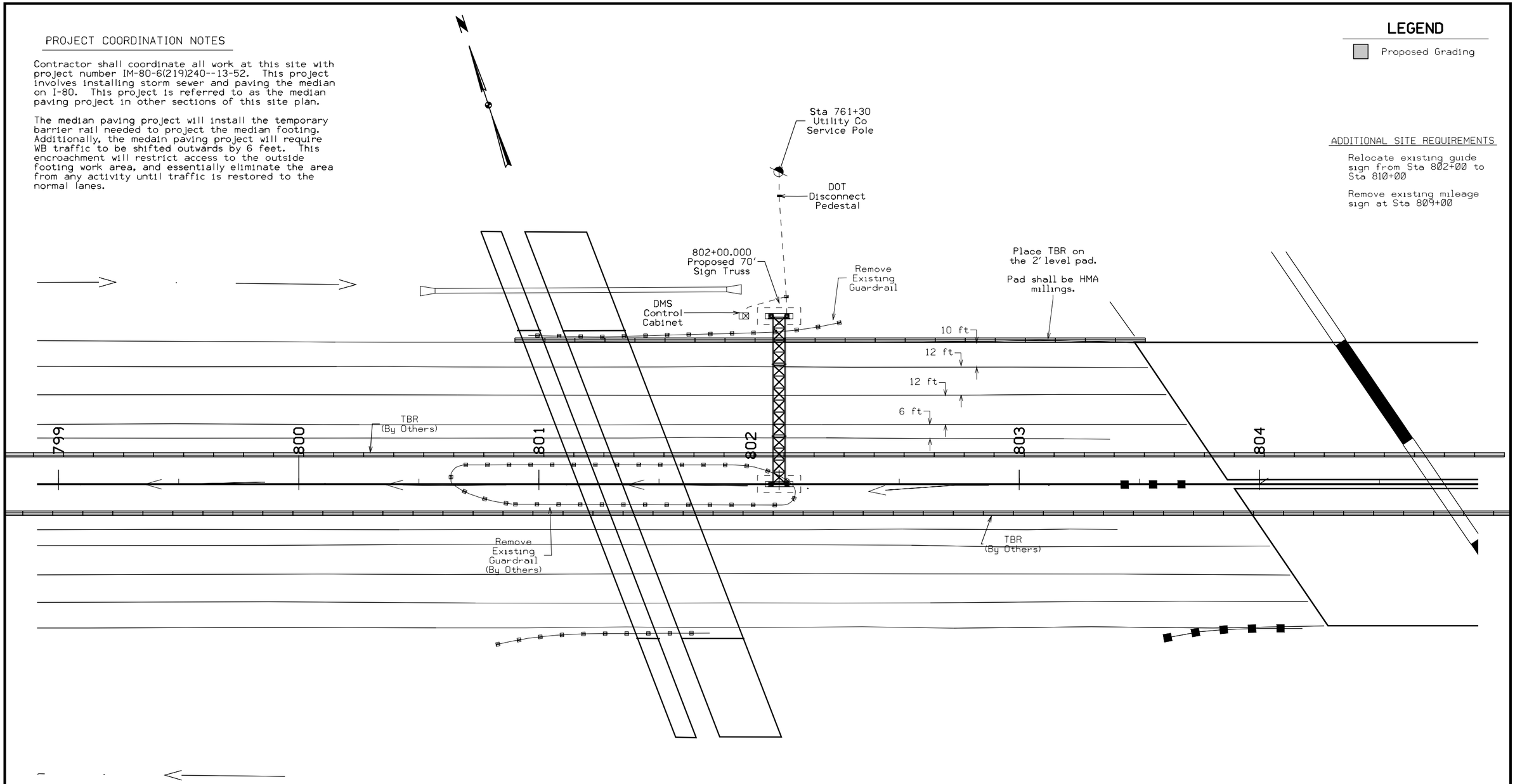

0 FEET 50

PROPOSED LAYOUT
for SITE #4 \ DMS #99
I-80 WB - JOHNSON COUNTY

DESIGN TEAM VORTHERMS/SCHRODER	ENGLISH	IOWA DOT * OFFICE OF TRAFFIC & SAFETY	VARIOUS COUNTY	PROJECT NUMBER STP-A-000-S(330)--22-00	SHEET NUMBER N.10

17-JAN-2007 13:05 jvorthe w:\Projects\0000001005\TrafEng\00-000S-330\00000330.n10

Bridge Standards

STOH-01-06
STOH-02-06
STOH-03-06
STOH-04-06
STOH-08-06
STOH-09-06
STOH-10-06
STOH-11-06
STOH-12-06
STOH-13-06
STOH-14-06
STOH-15-06

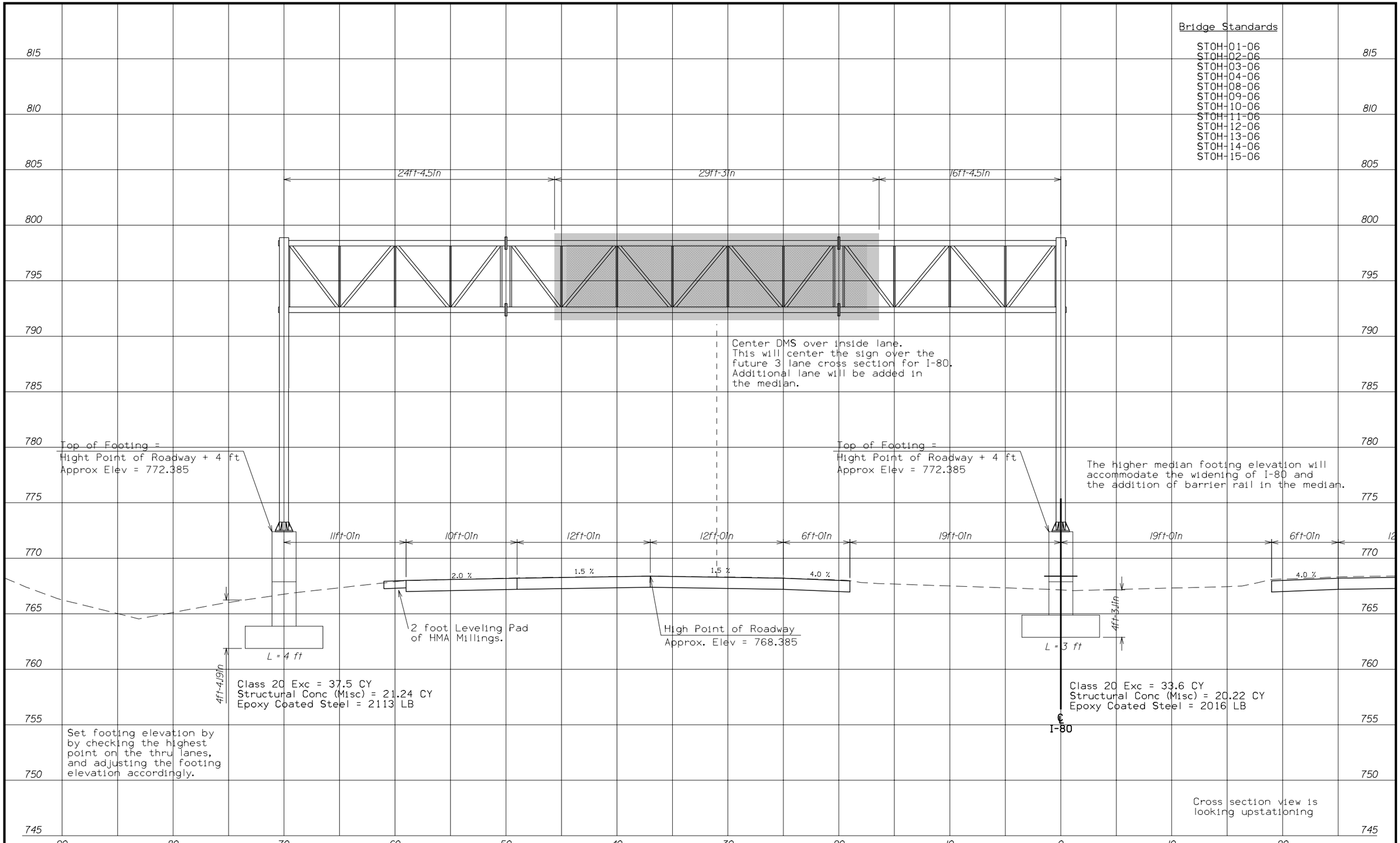

SITE #4 | I-80 WESTBOUND JOHNSON COUNTY | STA 802+00 PROPOSED 70' TRUSS

DESIGN TEAM VORTHERMS/SCHRODER	ENGLISH	IOWA DOT * OFFICE OF TRAFFIC & SAFETY	VARIOUS COUNTY	PROJECT NUMBER STP-A-000-S(330)--22-00	SHEET NUMBER N.11

17-JAN-2007 13:07 jvorthe w:\Projects\0000001005\TrafEng\00-000S-330\00000330.n10

SAMPLE STAGING SEQUENCE

Setup initial traffic control for median work
Median footing construction
Modify traffic control
- take down median TC-402 if next activity is scheduled several weeks from end date of current activity

Setup initial traffic control for outside work
Relocate/remove existing signs
- relocated sign shall not be out of service for more than 24 hours

Remove existing guardrail
Outside footing construction
Modify traffic control
- take down outside TC-402 if next activity is scheduled several weeks from end date of current activity

Install sign truss and DMS
Modify traffic control
Final seeding

PROJECT COORDINATION NOTES

Contractor shall coordinate all work at this site with project number IM-80-6(219)240--13-52. This project involves installing storm sewer and paving the median on I-80. This project is referred to as the median paving project in other sections of this site plan.

The median paving project will install the temporary barrier rail needed to project the median footing. Additionally, the medain paving project will require WB traffic to be shifted outwards by 6 feet. This encroachment will restrict access to the outside footing work area, and essentially eliminate the area from any activity until traffic is restored to the normal lanes.

WB WORK AREA

The outside footing construction shall not interfere with the median paving project. Outside footing construction shall be completed after the traffic lanes have been shifted back to the original positions near the conclusion of the median paving project. An alternate schedule may be planned between the contractor's, and any such schedule shall be approved by the Engineer prior to commencing.

Protect outside footing and work area with temporary barrier rail (TBR) at all times. Temporary barrier rail shall remain in place and become the property of the DOT upon completion of the project.

Standard Road Plan TC-402 shall be used when there is work being done at the site. At other times, the shoulder closure may be removed.

Standard Road Plan TC-451 shall be used to install the sign truss and DMS. Times of closure shall be coordinated with the Engineer.

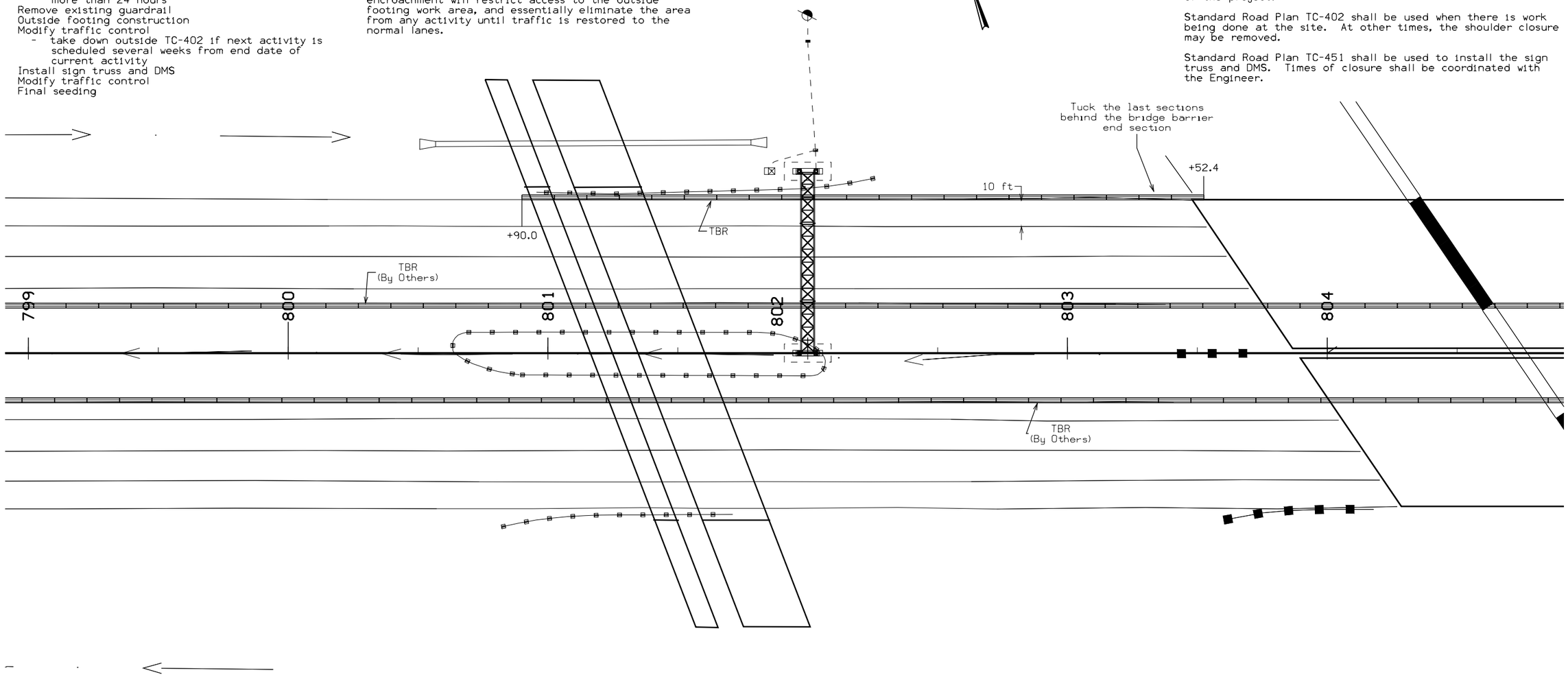

MEDIAN WORK AREA

The median work area will be protected by temporary barrier rail which is to be installed with the median paving project. Median footing construction shall commence as soon as the site is made available by the median paving contractor. Completion of the median footing shall not delay the median paving project in any matter.

If applicable, a shoulder closure, TC-402, shall be required when there are ongoing construction activities in the median (i.e. - footing construction, grading, guardrail installation, etc.) This setup shall remain in place so long as there is continuous activity at the site.

Access to the median footing is available at Sta. 732+00± and/or Sta. 860+00±.

Any excess excavation shall be removed from the site and wasted by the Contractor

STANDARD ROAD PLANS

TC-1
TC-402
TC-451
RE-71

0 FEET 100

TRAFFIC CONTROL for SITE #4 / DMS #99 I-80 WB - JOHNSON COUNTY

DESIGN TEAM VORTHERMS/SCHRODER	ENGLISH	IOWA DOT * OFFICE OF TRAFFIC & SAFETY	VARIOUS COUNTY	PROJECT NUMBER STP-A-000-S(330)--22-00	SHEET NUMBER N.12

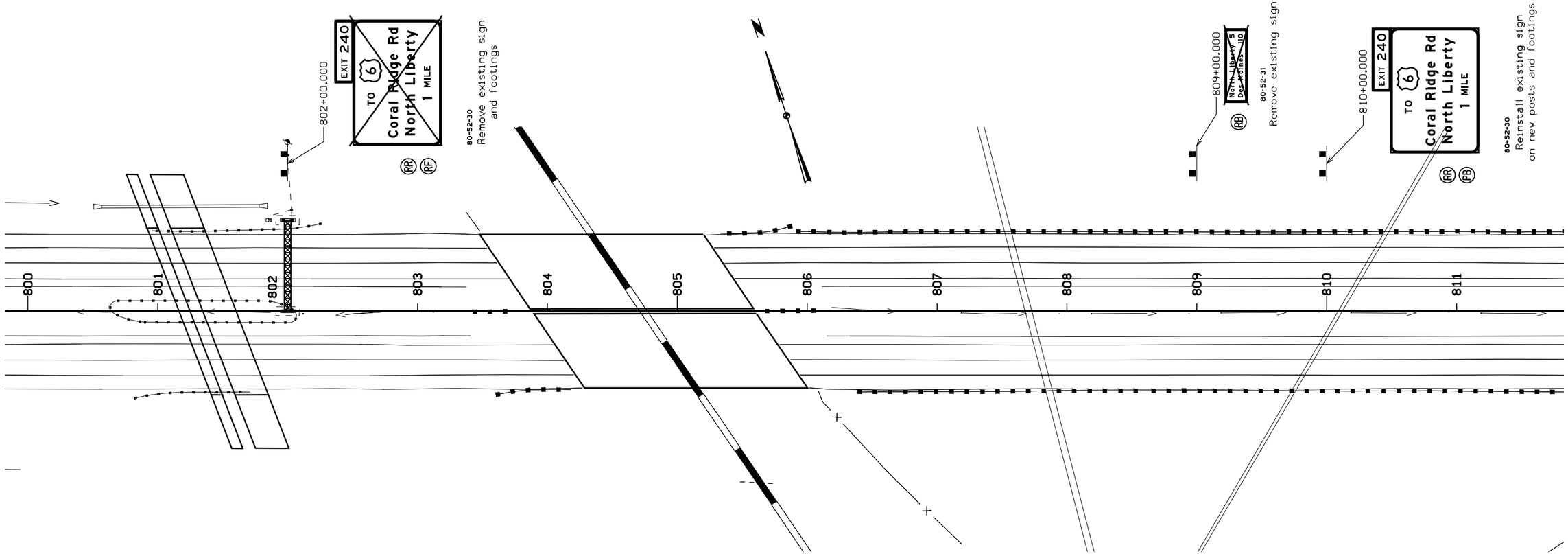

PLAN VIEW

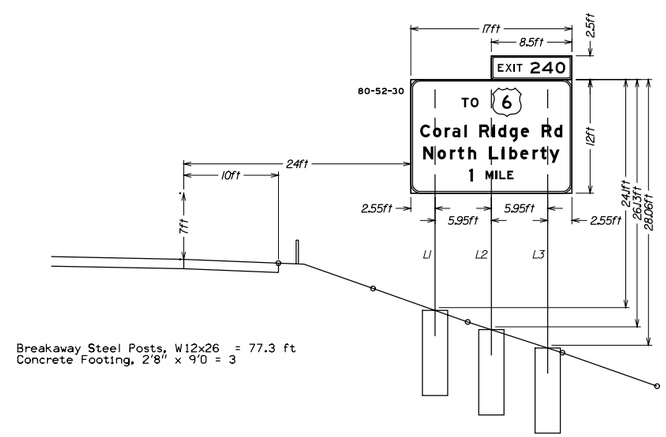

CROSS SECTION @ STA 810+00

shown in the direction of travel

SITE NOTES

Sign removal and relocation shall be completed prior to beginning any construction activity for the outside truss footing. Sign number 80-52-31 may be removed immediately. Sign number 80-52-30 shall be removed and immediately reinstalled on the new posts.

A proposed staging plan is: remove sign 80-52-31, construct new footings, install new posts, remove and reinstall sign 80-52-30, begin outside median footing construction.

The existing low tension cable guardrail shall not be disturbed.

A shoulder closure, TC-402, shall be used for activities behind the existing cable guardrail. A lane closure, TC-418 & TC-420, will be allowed during off-peak hours to relocate the existing sign.

STANDARD ROAD PLANS

TC-1	RD-21A
TC-402	RD-21B
TC-418	RD-22A
TC-420	RD-23
	RD-24
	RD-25
	RD-31

0 FEET 100

SIGN RELOCATION DETAILS for SITE #4 / DMS #99 I-80 WB - JOHNSON COUNTY

DESIGN TEAM	VORTHERMS/SCHRODER	ENGLISH	IOWA DOT * OFFICE OF TRAFFIC & SAFETY	VARIOUS COUNTY	PROJECT NUMBER STP-A-000-S(330)--22-00	SHEET NUMBER N.13

SITE DETAILS

Site #5 is on I-80 eastbound in Johnson County at Sta 866+00.

Site work includes the installation of a post mounted side-of-road DMS, and the relocation of an existing Type A sign.

An existing deer crossing warning sign shall be moved 200 feet east of the DMS location. The existing sign and post shall be removed and reinstalled. Use RD-28, Type 2 for install details.

Location can be found using the stations stamped in the concrete along the outside shoulder.

TRAFFIC CONTROL

Shoulder closures, TC-402, shall be used for activities at this site.

Lane closures shall not be permitted at this site.

STANDARD ROAD PLANS

RD-21A	TC-1
RD-21B	TC-402
RD-22A	
RD-28	

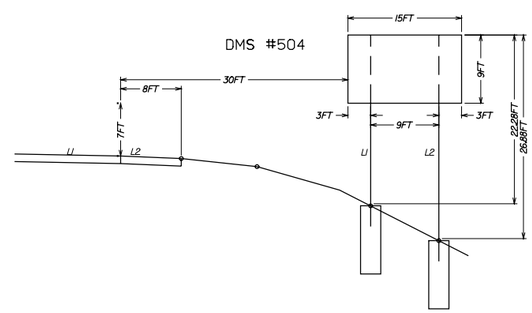

Breakaway Steel Posts, W12x26 = 49.2 ft
Concrete Footing, 2'8" x 9'0 = 2

CROSS SECTION @ STA 866+00

shown in the direction of travel

SITE DETAILS
for SITE #5 / DMS #504
I-80 EB - JOHNSON COUNTY

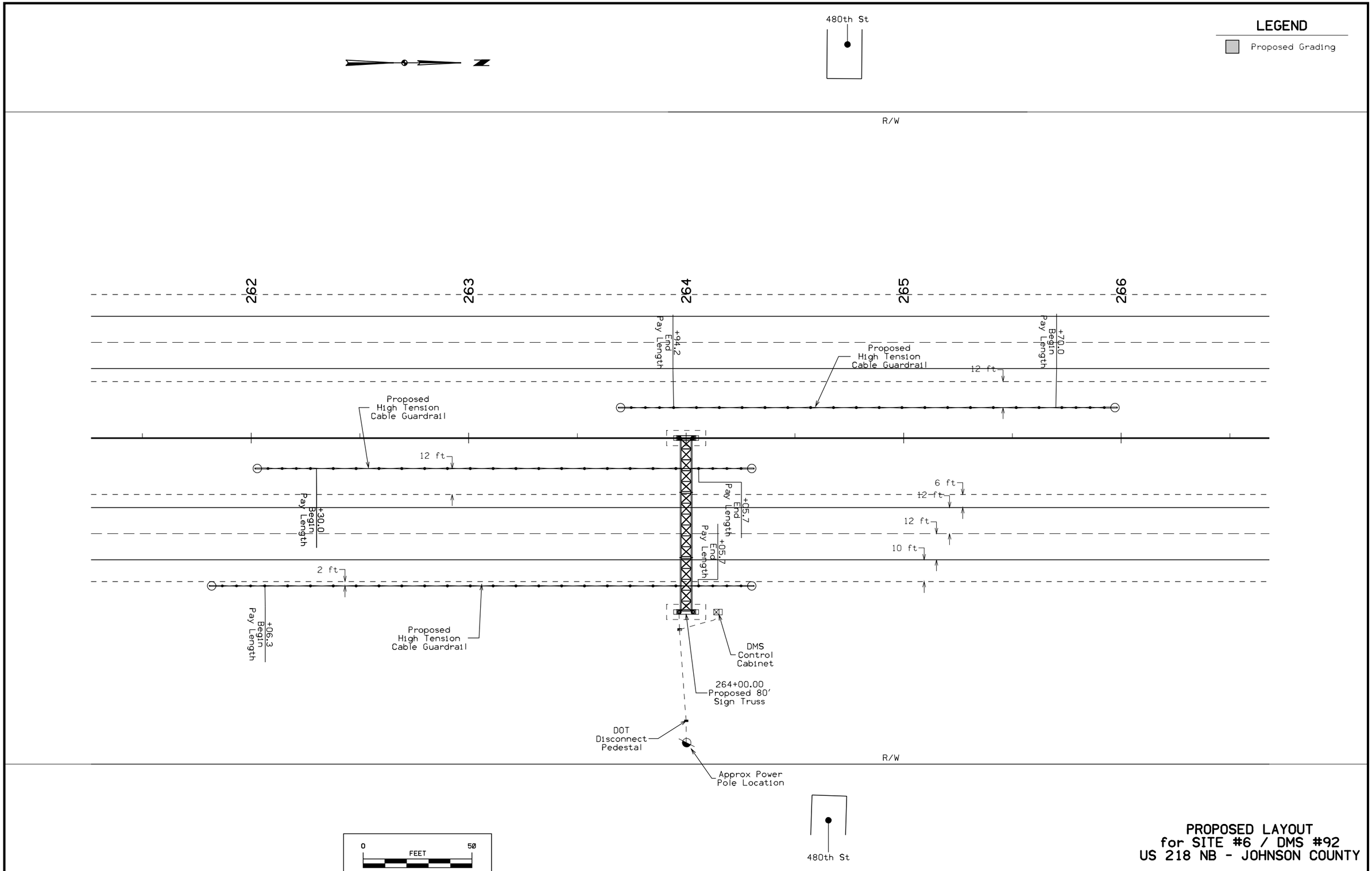

PROPOSED LAYOUT
for SITE #6 / DMS #92
US 218 NB - JOHNSON COUNTY

DESIGN TEAM VORTHERMS/SCHRODER	ENGLISH	IOWA DOT * OFFICE OF TRAFFIC & SAFETY	VARIOUS COUNTY	PROJECT NUMBER STP-A-000-S(330)--22-00	SHEET NUMBER N.15

29-DEC-2006 10:13 jvorthe w:\Projects\0000001005\TrafEng\00-000S-330\00000330.n15

Bridge Standards

STOH-01-06
STOH-05-06
STOH-06-06
STOH-07-06
STOH-08-06
STOH-09-06
STOH-10-06
STOH-11-06
STOH-12-06
STOH-13-06
STOH-14-06
STOH-15-06

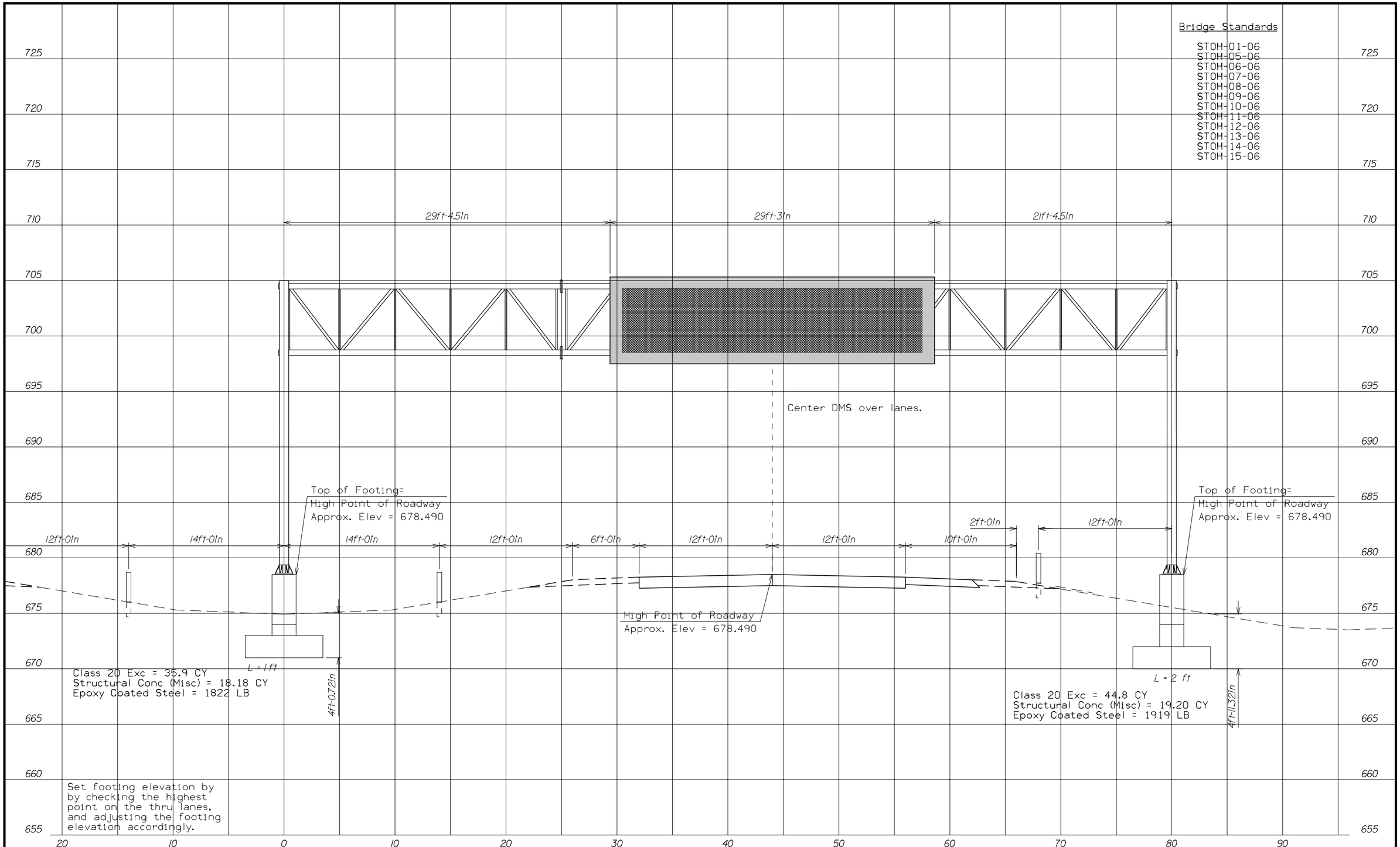

SITE #6 | US 218 NORTHBOUND JOHNSON COUNTY | STA 264+00 PROPOSED 80' TRUSS

DESIGN TEAM VORTHERMS/SCHRODER	ENGLISH	IOWA DOT * OFFICE OF TRAFFIC & SAFETY	VARIOUS COUNTY	PROJECT NUMBER STP-A-000-S(330)--22-00	SHEET NUMBER N.16

SAMPLE STAGING SEQUENCE

Setup initial traffic control
Install high tension cable guardrail
Footing construction
Modify traffic control
- take down TC-402 if next activity is scheduled several weeks from end date of current activity

Install sign truss and DMS
Final seeding

MEDIAN WORK AREA

A shoulder closure, TC-402, shall be required when there are ongoing construction activities in the median (i.e. - grading, guardrail installation, footing construction, etc.) This setup shall remain in place so long as there is continuous activity at the site.

The high tension cable guardrail shall be installed first at the work site in order to protect the site during footing construction.

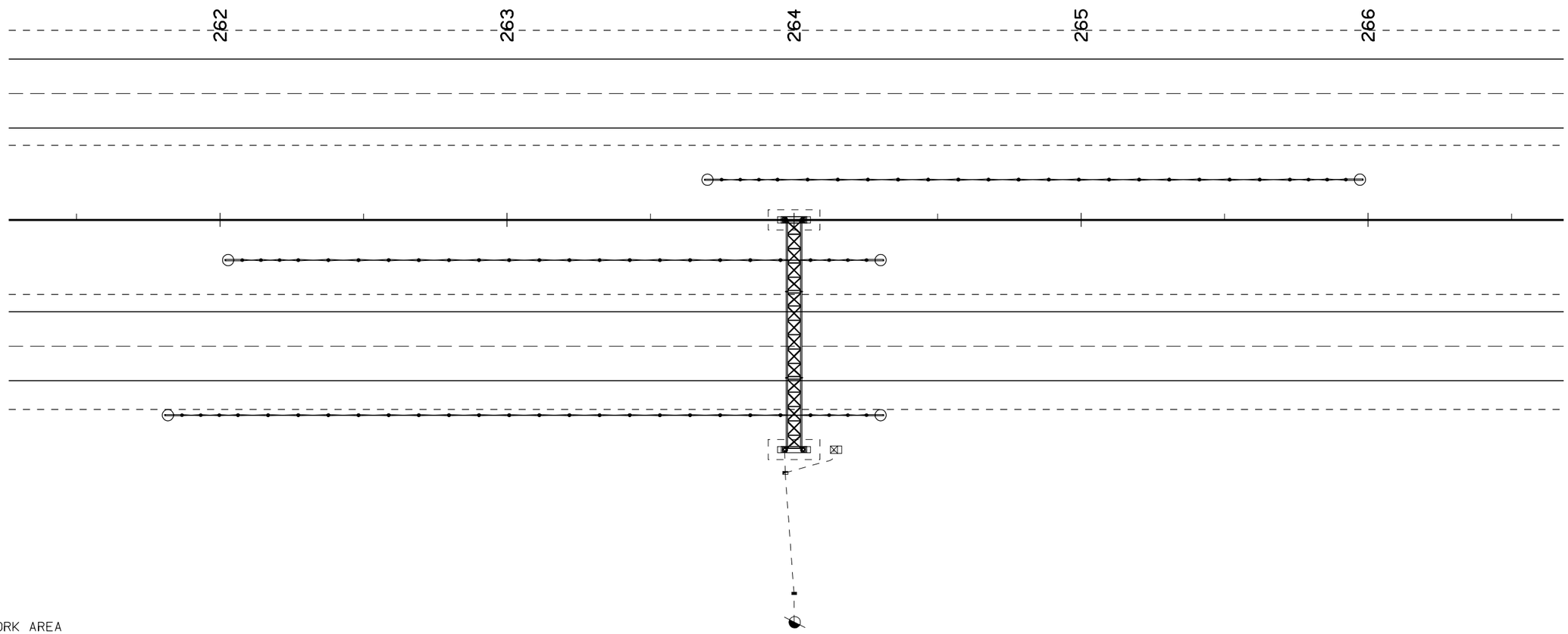

NB WORK AREA

A shoulder closure, TC-402, shall be required when there are ongoing activities along the shoulder (i.e. - grading, guardrail installation, footing construction, etc.) The shoulder closure may be removed during periods of inactivity.

Standard Road Plan TC-451 shall be used to install the sign truss and DMS. Times of closure shall be coordinated with the Engineer.

STANDARD ROAD PLANS

TC-1
TC-402
TC-451
RE-71

0 FEET 50

TRAFFIC CONTROL
for SITE #6 / DMS #92
US 218 NB - JOHNSON COUNTY

SITE DETAILS

Site #7 is on US 218 southbound in Johnson County at Sta 1553+00.

Site work includes the installation of a post mounted side-of-road DMS.

Location can be found using the stations stamped in the concrete along the outside shoulder.

TRAFFIC CONTROL

Shoulder closures, TC-402, shall be used for activities at this site.

Lane closures shall not be permitted at this site.

STANDARD ROAD PLANS

RD-21A
RD-21B
RD-22A
TC-1
TC-402

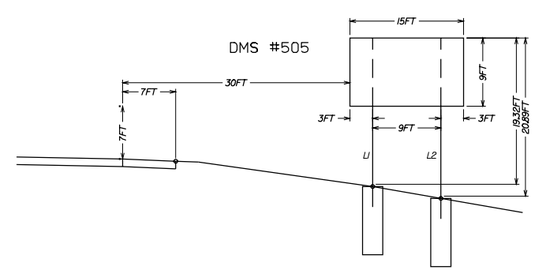

Breakaway Steel Posts, W12x26 = 40.2 ft
Concrete Footing, 2'8" x 9'0 = 2

CROSS SECTION @ STA 1553+00

shown in the direction of travel

SITE DETAILS
for SITE #7 / DMS #505
US 218 SB - JOHNSON COUNTY

SITE DETAILS

Site #8 is on I-380 northbound in Johnson County at Sta 1300+00.

Site work includes the installation of a post mounted side-of-road DMS.

Location can be found using the station posts alongside the roadway.

TRAFFIC CONTROL

Shoulder closures, TC-402, shall be used for activities at this site.

Lane closures shall not be permitted at this site.

STANDARD ROAD PLANS

RD-21A	TC-1
RD-21B	TC-402
RD-22A	

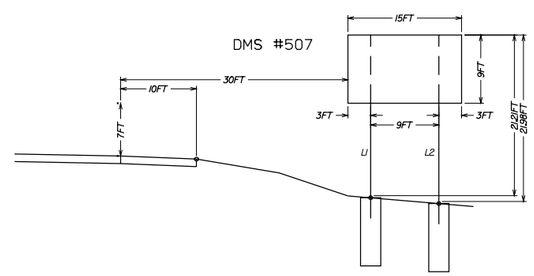

Breakaway Steel Posts, W12x26 = 43.2 ft
Concrete Footing, 2'8" x 9'0 = 2

CROSS SECTION @ STA 1300+00

shown in the direction of travel

SITE DETAILS
for SITE #8 / DMS #507
I-380 NB - JOHNSON COUNTY

SITE DETAILS

Site #9 is on I-380 southbound in Johnson County at Sta 1300+00.

Site work includes the installation of a post mounted side-of-road DMS.

Location can be found using the station posts alongside the northbound roadway.

TRAFFIC CONTROL

Shoulder closures, TC-402, shall be used for activities at this site.

Lane closures shall not be permitted at this site.

STANDARD ROAD PLANS

RD-21A	TC-1
RD-21B	TC-402
RD-22A	

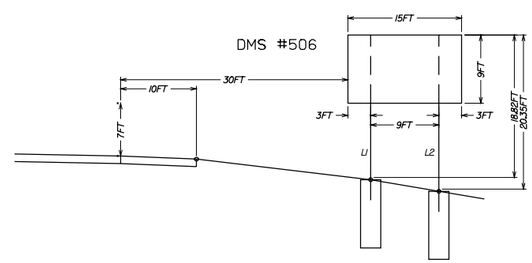

Breakaway Steel Posts, W12x26 = 39.2 ft
Concrete Footing, 2'8" x 9'0 = 2

CROSS SECTION @ STA 1300+00

shown in the direction of travel

SITE DETAILS
for SITE #9 / DMS #506
I-380 SB - JOHNSON COUNTY

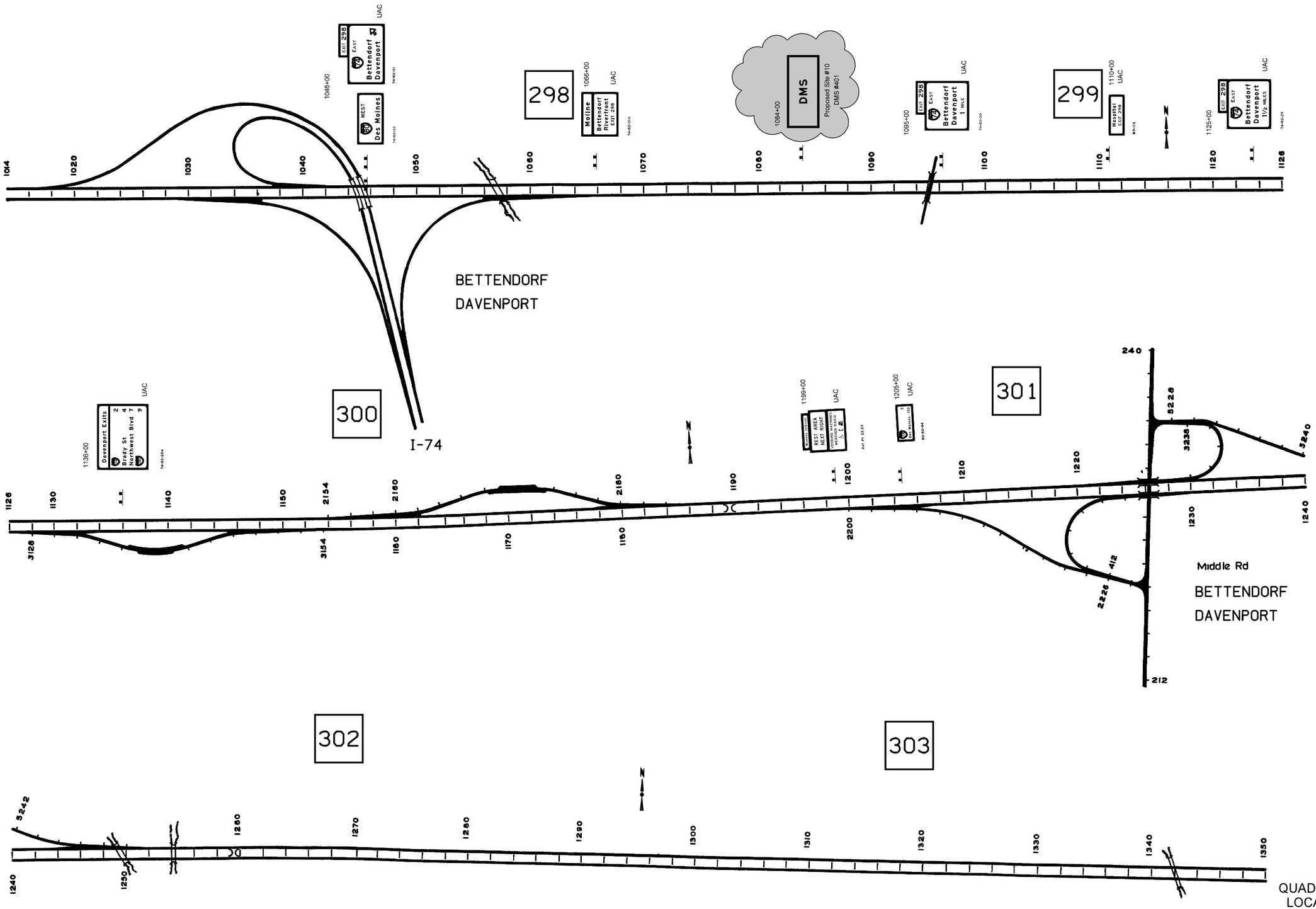

FOR INFORMATION ONLY
Not to Scale

QUAD CITIES AREA
LOCATION MAPS

I-80
SCOTT COUNTY

DESIGN TEAM VORTHERMS/SCHRODER	ENGLISH	IOWA DOT * OFFICE OF TRAFFIC & SAFETY	VARIOUS COUNTY	PROJECT NUMBER STP-A-000-S(330)--22-00	SHEET NUMBER N.21

29-DEC-2006 10:15 jvorthe w:\Projects\0000001005\TrafEng\00-000S-330\00000330.n21

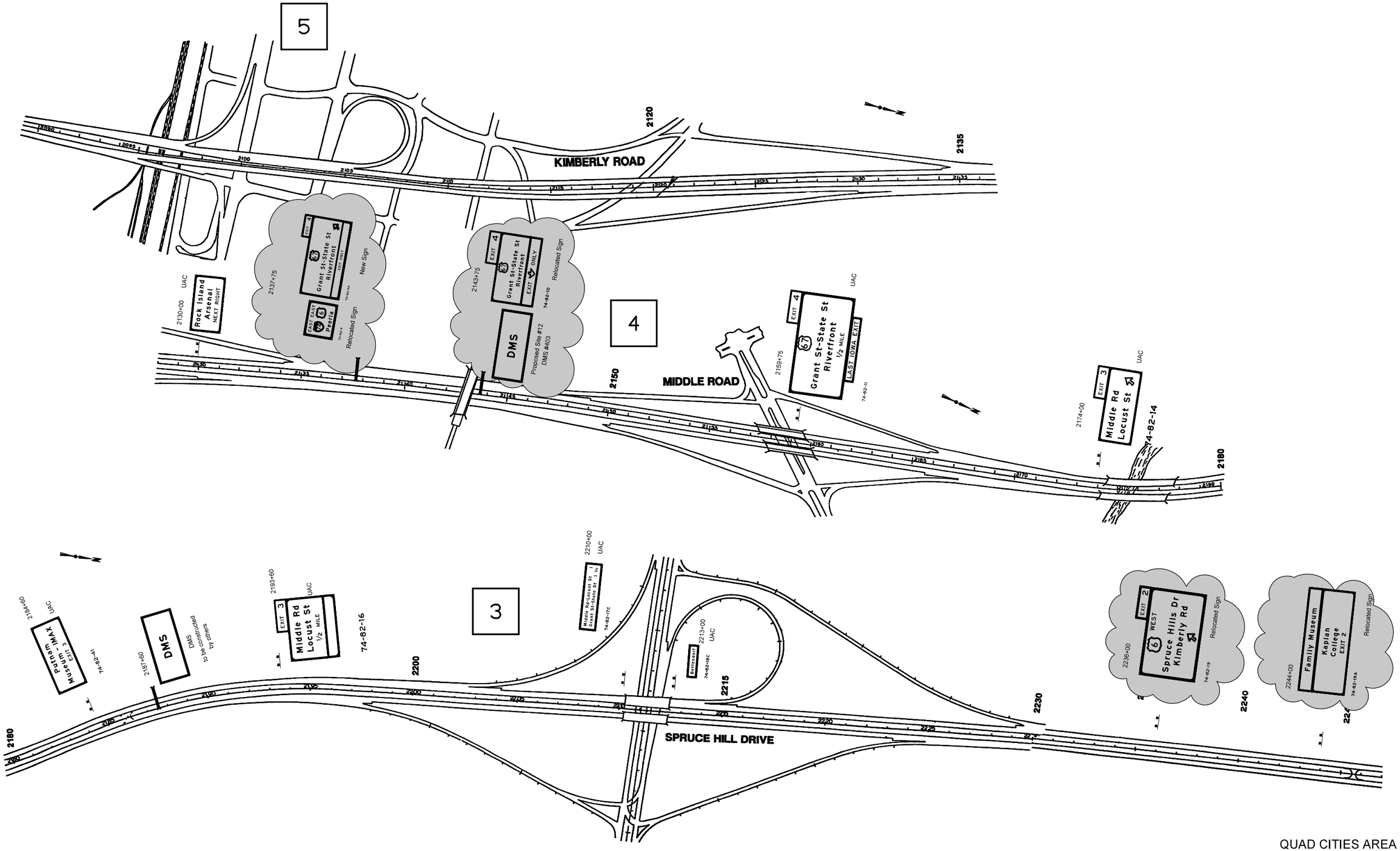

FOR INFORMATION ONLY
Not to Scale

QUAD CITIES AREA
LOCATION MAPS
I-74
SCOTT COUNTY

DESIGN TEAM VORTHERMS/SCHRODER	ENGLISH	IOWA DOT * OFFICE OF TRAFFIC & SAFETY	VARIOUS COUNTY	PROJECT NUMBER STP-A-000-S(330)--22-00	SHEET NUMBER N.22

29-DEC-2006 10:16 jvorthe w:\Projects\0000001005\TrafEng\00-000S-330\00000330.n21

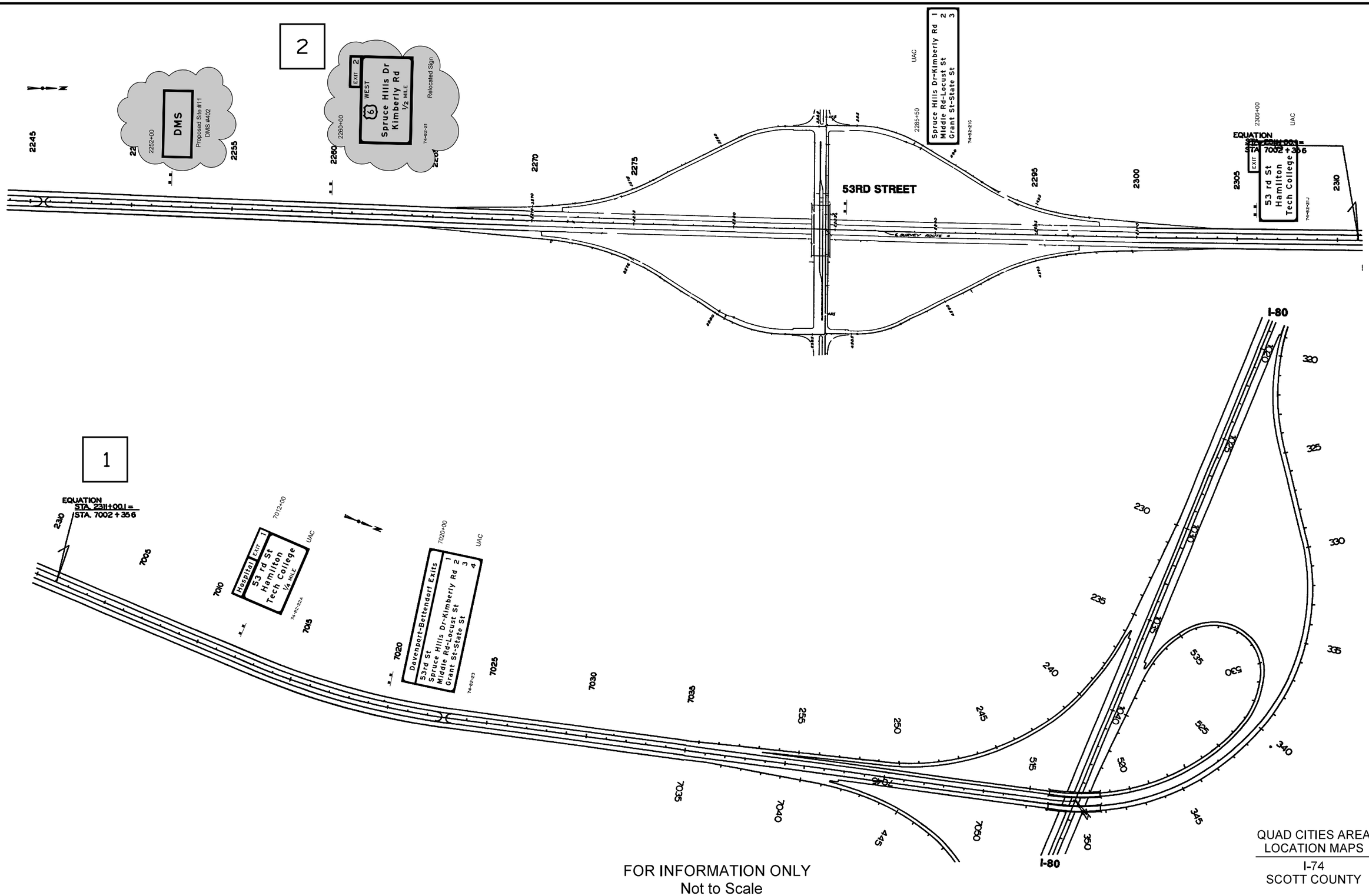

FOR INFORMATION ONLY
Not to Scale

DESIGN TEAM VORTHERMS/SCHRODER	ENGLISH	IOWA DOT * OFFICE OF TRAFFIC & SAFETY	VARIOUS COUNTY	PROJECT NUMBER STP-A-000-S(330)--22-00	SHEET NUMBER N.23

29-DEC-2006 10:16 jvorthe w:\Projects\0000001005\TrafEng\00-000S-330\00000330.n21

SITE DETAILS

Site #10 is on I-80 westbound in Scott County at Sta 1084+00.

Site work includes the installation of a post mounted side-of-road DMS.

Location can be found using the stations stamped in the concrete along the outside shoulder.

TRAFFIC CONTROL

Shoulder closures, TC-402, shall be used for activities at this site.

Lane closures shall not be permitted at this site.

STANDARD ROAD PLANS

RD-21A	TC-1
RD-21B	TC-402
RD-22A	

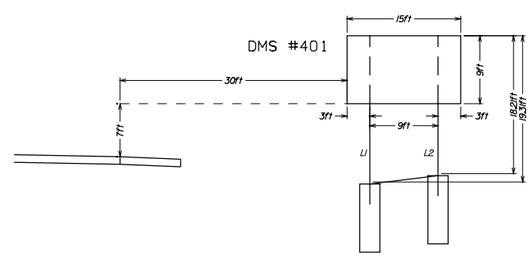

Breakaway Steel Posts, W12x26 = 37.5 ft
Concrete Footing, 2'8" x 9'0 = 2

CROSS SECTION @ STA 1084+00

shown in the direction of travel

SITE DETAILS
for SITE #10 / DMS #401
I-80 WB - SCOTT COUNTY

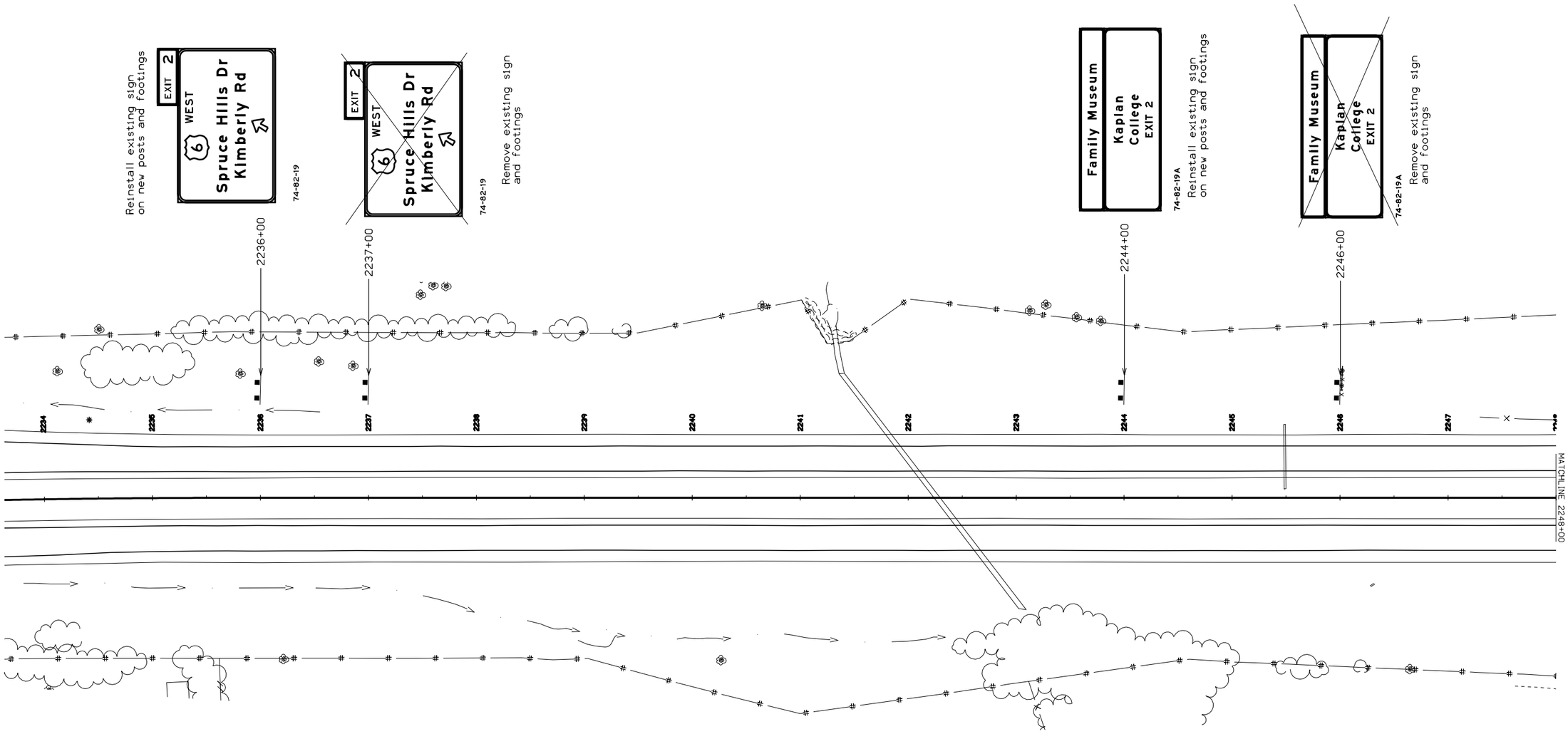

SITE DETAILS

Site #11 is on I-74 eastbound in Scott County at Sta 2252+00.

Site work includes the installation of a post mounted side-of-road DMS, and the relocation of existing Type B guide signs.

Signs shall be removed and immediately reinstalled on the new posts.

A proposed staging plan is: construct new footings, install new posts, remove and reinstall Type B signs, complete old footing removal.

A shoulder closure, TC-402, shall be used for activities along the roadway. A lane closure, TC-418 & TC-420, may be used during off-peak hours to relocate the existing signs. Time of closure shall be coordinated with the Engineer.

STANDARD ROAD PLANS

RD-21A	TC-1
RD-21B	TC-402
RD-22A	TC-418
RD-23	TC-420
RD-24	
RD-25	
RD-31	

0 FEET 50

PROPOSED LAYOUT
for SITE #11 / DMS #402
I-74 SB - SCOTT COUNTY

LEGEND

Proposed Grading

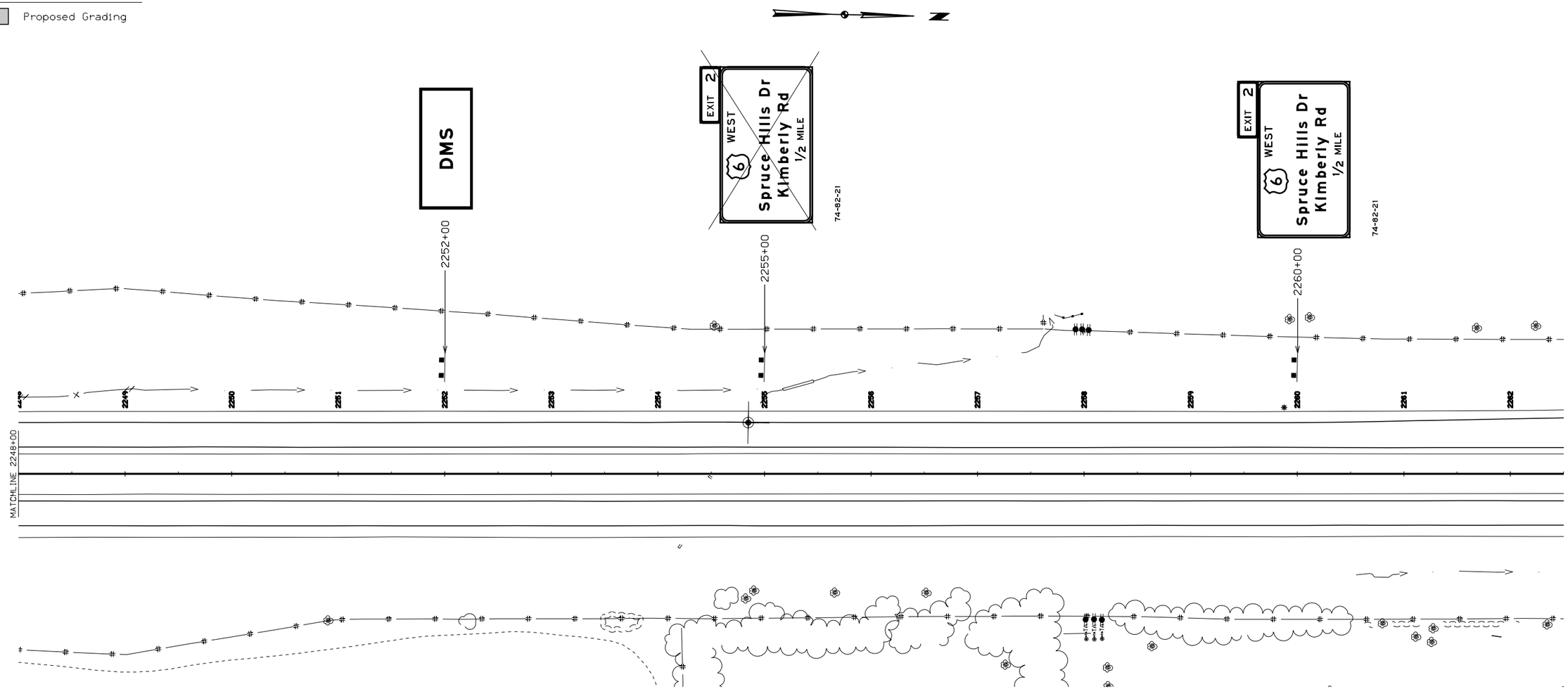

0 FEET 50

PROPOSED LAYOUT
for SITE #11 / DMS #402
I-74 SB - SCOTT COUNTY

DESIGN TEAM VORTHERMS/SCHRODER	ENGLISH	IOWA DOT * OFFICE OF TRAFFIC & SAFETY	VARIOUS COUNTY	PROJECT NUMBER STP-A-000-S(330)--22-00	SHEET NUMBER N.26

29-DEC-2006 10:18 jvorthe v:\Projects\0000001005\TrafEng\00-000S-330\00000330.n25

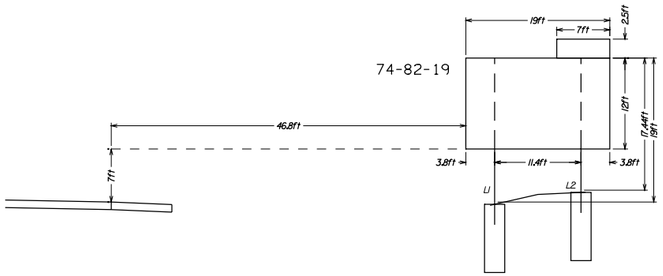

Breakaway Steel Posts, W12x26 = 36.4 ft
Concrete Footing, 2'8" x 9'0 = 2

CROSS SECTION @ STA 2236+00

shown in the direction of travel

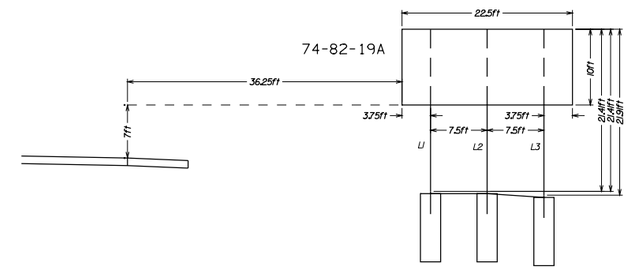

Breakaway Steel Posts, W12x26 = 64.7 ft
Concrete Footing, 2'8" x 9'0 = 3

CROSS SECTION @ STA 2244+00

shown in the direction of travel

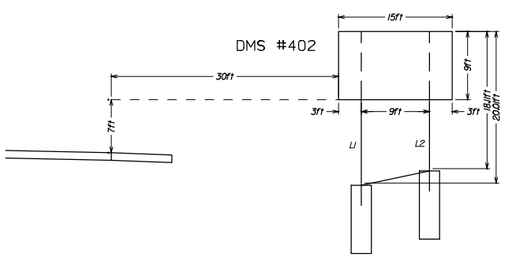

Breakaway Steel Posts, W12x26 = 38.1 ft
Concrete Footing, 2'8" x 9'0 = 2

CROSS SECTION @ STA 2252+00

shown in the direction of travel

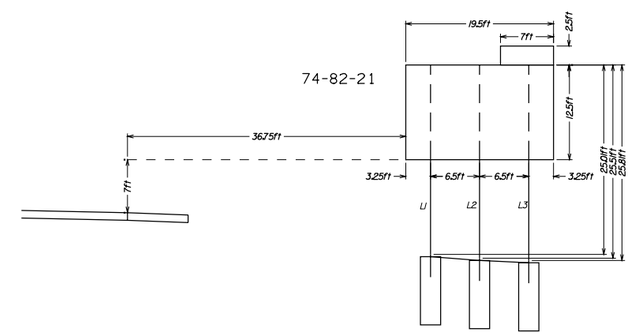

Breakaway Steel Posts, W12x26 = 76.3 ft
Concrete Footing, 2'8" x 9'0 = 3

CROSS SECTION @ STA 2260+00

shown in the direction of travel

SITE DETAILS
for SITE #11 / DMS #402
I-74 EB - SCOTT COUNTY

LEGEND

Proposed Grading

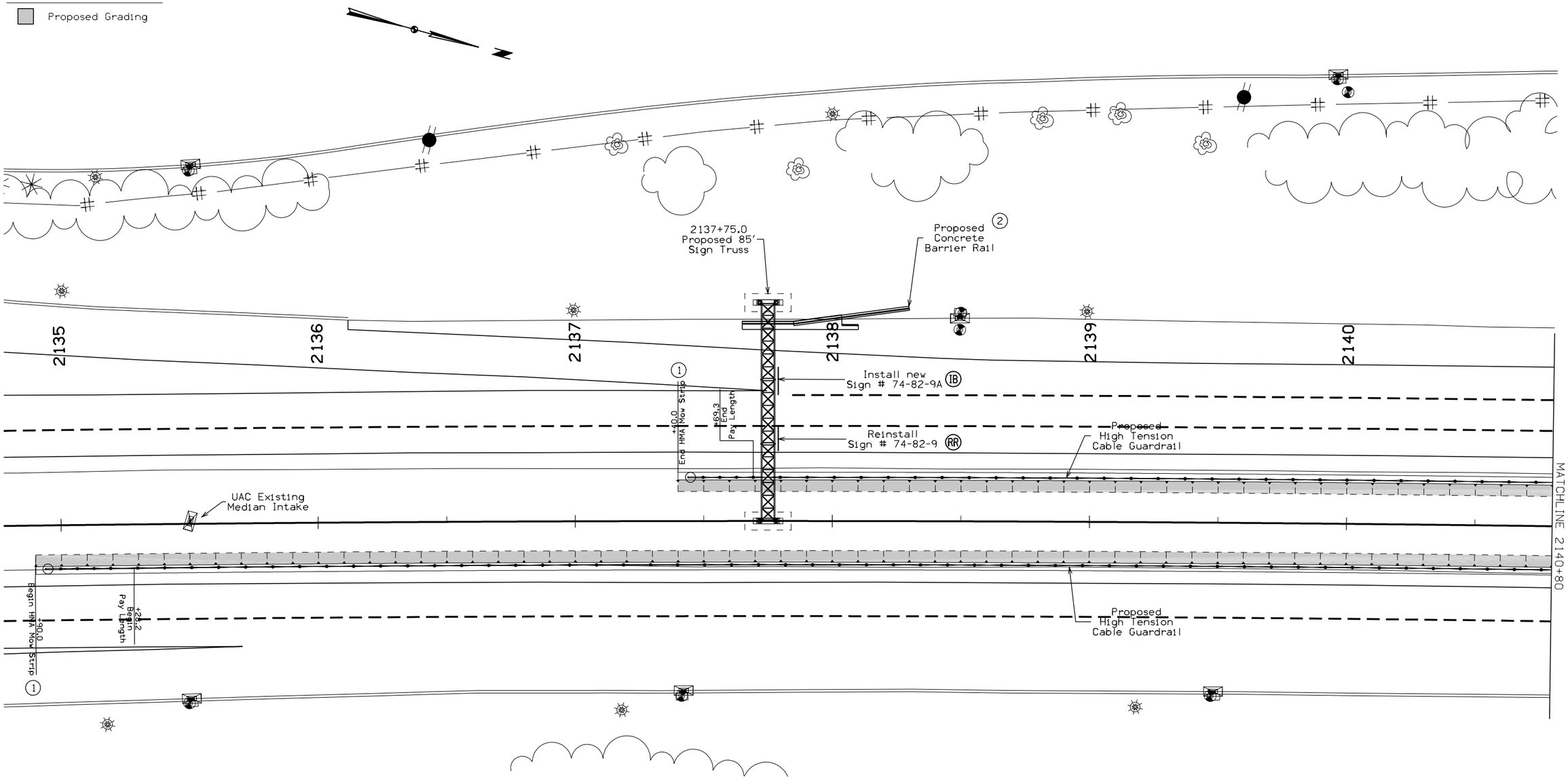

(1) Dependent upon end anchorage.

(2) Refer to Details of Barrier Rail found the the B sheets.

SITE DETAILS

Site #12 is on I-74 eastbound in Scott County at Sta 214.+75.

Site work includes the installation of a truss mounted side-of-road DMS, and the relocation of existing Type B guide signs.

Signs shall be removed and immediately reinstalled at the new locations.

0 FEET 50

PROPOSED LAYOUT
for SITE #12 / DMS #403
I-74 SB - SCOTT COUNTY

DESIGN TEAM VORTHERMS/SCHRODER	ENGLISH	IOWA DOT * OFFICE OF TRAFFIC & SAFETY	VARIOUS COUNTY	PROJECT NUMBER STP-A-000-S(330)--22-00	SHEET NUMBER N.28

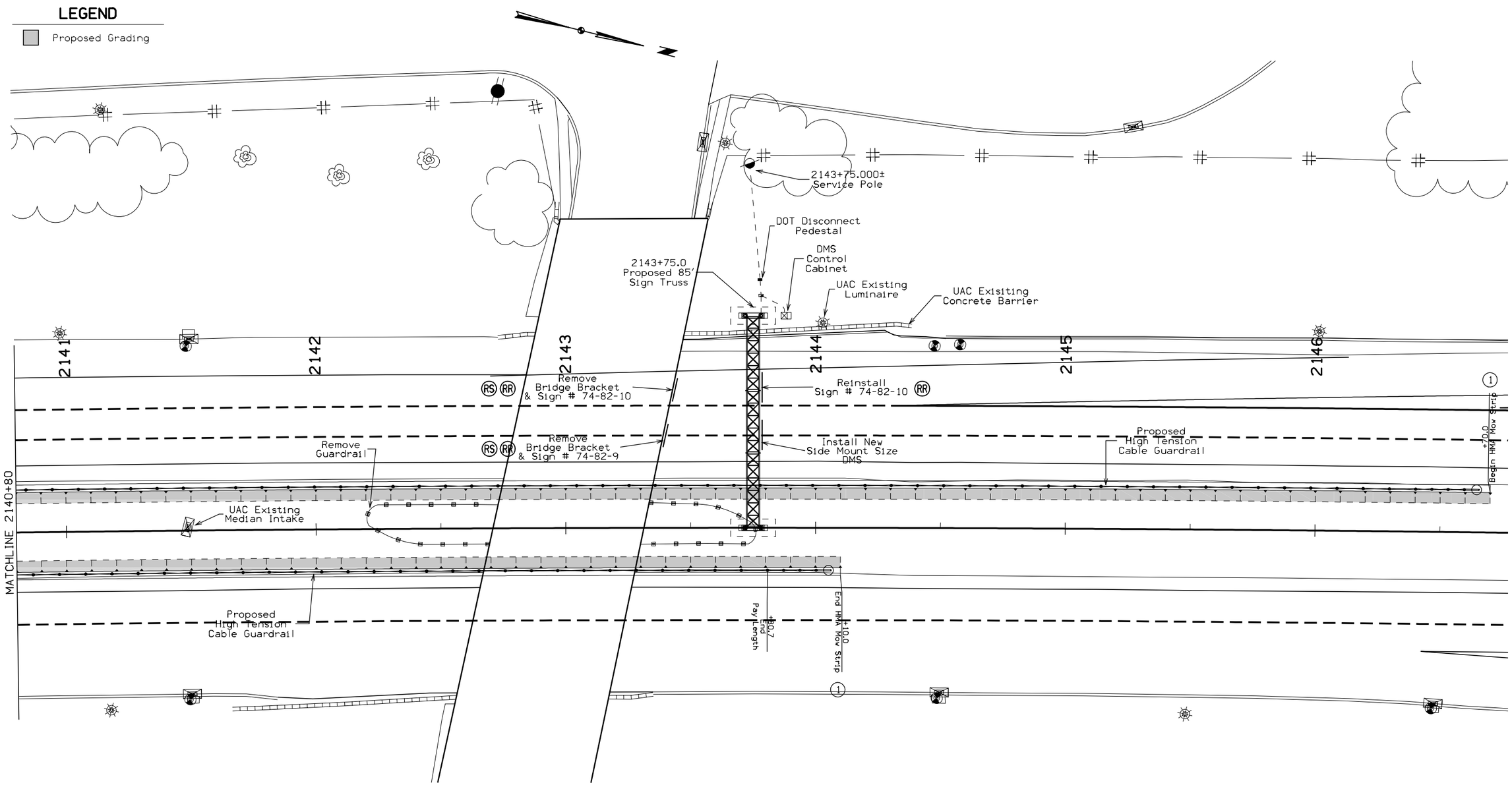

1 Dependent upon end anchorage.

0 FEET 50

PROPOSED LAYOUT
for SITE #12 / DMS #403
I-74 SB - SCOTT COUNTY

DESIGN TEAM VORTHERMS/SCHRODER	ENGLISH	IOWA DOT * OFFICE OF TRAFFIC & SAFETY	VARIOUS COUNTY	PROJECT NUMBER STP-A-000-S(330)--22-00	SHEET NUMBER N.29

29-DEC-2006 10:21 jvorthe w:\Projects\0000001005\TrafEng\00-000S-330\00000330.n28

Bridge Standards

STOH-01-06
STOH-05-06
STOH-06-06
STOH-07-06
STOH-10-06
STOH-14-06
STOH-15-06

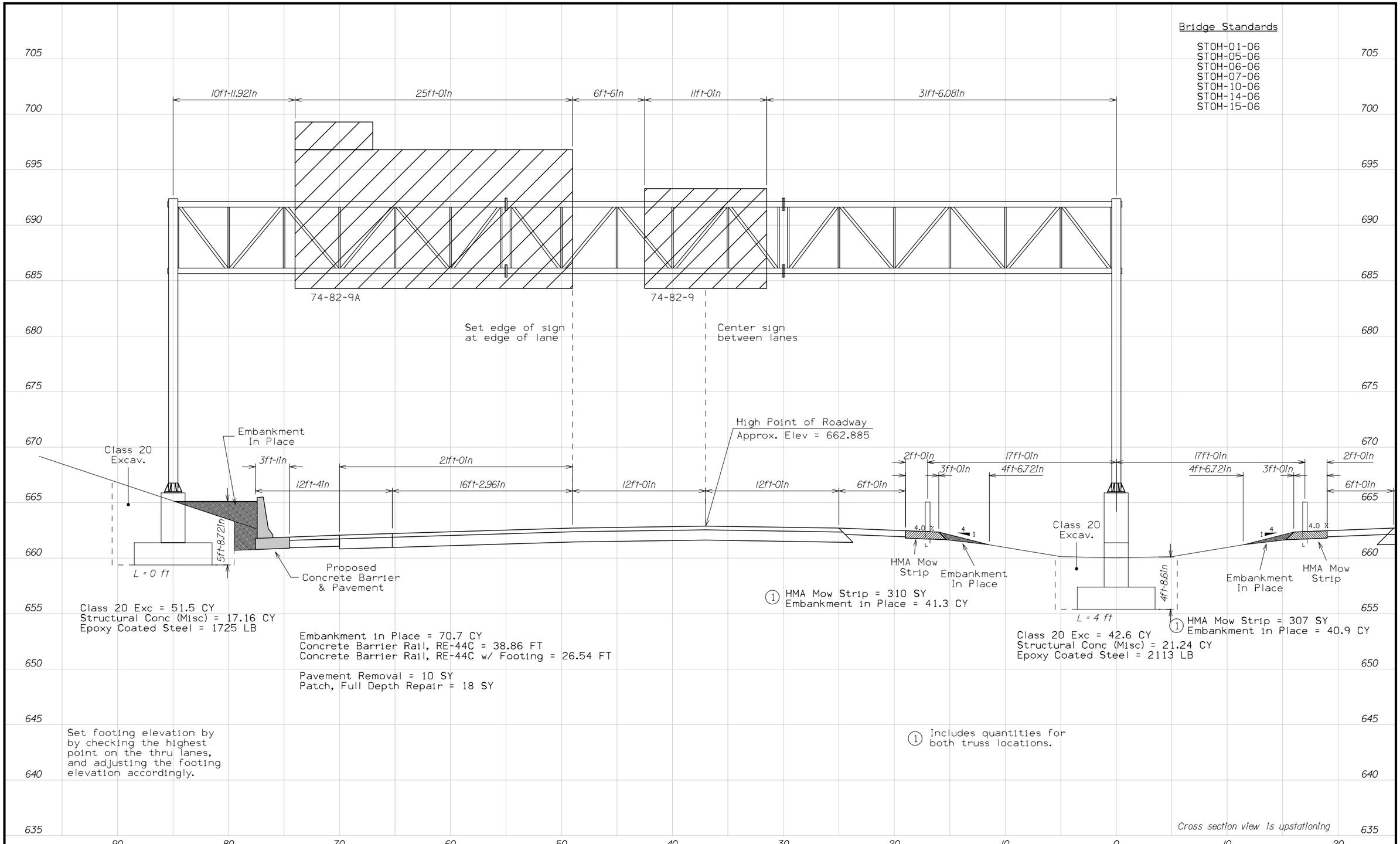

Class 20 Exc = 51.5 CY
Structural Conc (Misc) = 17.16 CY
Epoxy Coated Steel = 1725 LB

Embankment in Place = 70.7 CY
Concrete Barrier Rail, RE-44C = 38.86 FT
Concrete Barrier Rail, RE-44C w/ Footing = 26.54 FT

Pavement Removal = 10 SY
Patch, Full Depth Repair = 18 SY

Set footing elevation by by checking the highest point on the thru lanes, and adjusting the footing elevation accordingly.

(1) HMA Mow Strip = 310 SY
Embankment in Place = 41.3 CY

(1) HMA Mow Strip = 307 SY
Embankment in Place = 40.9 CY

Class 20 Exc = 42.6 CY
Structural Conc (Misc) = 21.24 CY
Epoxy Coated Steel = 2113 LB

(1) Includes quantities for both truss locations.

Cross section view is upstationing

SITE #12 | I-74 SOUTHBOUND SCOTT COUNTY | STA 2137+75 PROPOSED 85' TRUSS

DESIGN TEAM VORTHERMS/SCHRODER	ENGLISH	IOWA DOT * OFFICE OF TRAFFIC & SAFETY	VARIOUS COUNTY	PROJECT NUMBER STP-A-000-S(330)--22-00	SHEET NUMBER N.30

29-DEC-2006 10:22 jvorthe w:\Projects\0000001005\TrafEng\00-000S-330\00000330.n28

Bridge Standards

STOH-01-06
STOH-05-06
STOH-06-06
STOH-07-06
STOH-08-06
STOH-09-06
STOH-10-06
STOH-14-06
STOH-15-06

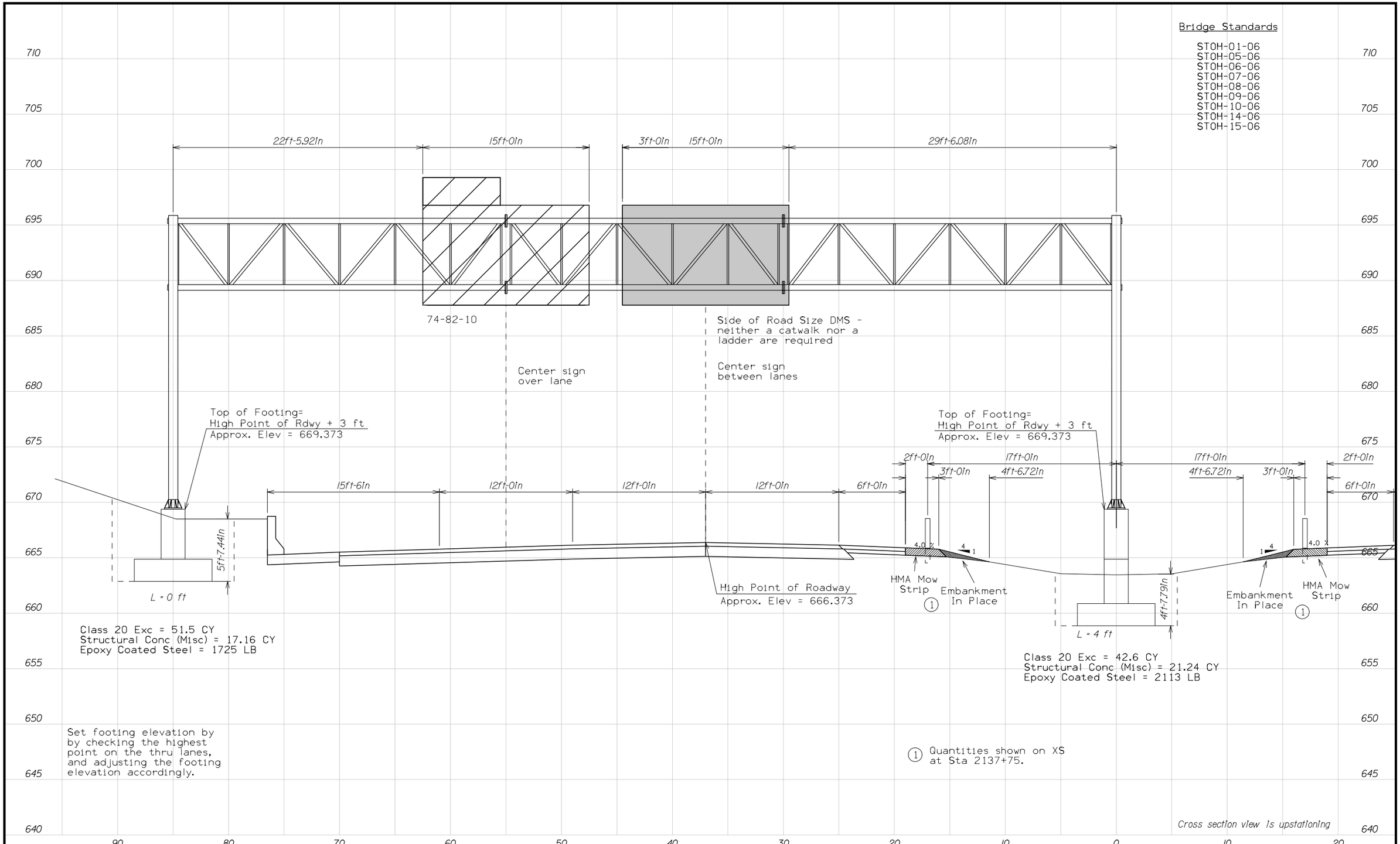

Class 20 Exc = 51.5 CY
Structural Conc (Misc) = 17.16 CY
Epoxy Coated Steel = 1725 LB

Class 20 Exc = 42.6 CY
Structural Conc (Misc) = 21.24 CY
Epoxy Coated Steel = 2113 LB

Set footing elevation by by checking the highest point on the thru lanes, and adjusting the footing elevation accordingly.

(1) Quantities shown on XS at Sta 2137+75.

SITE #12 | I-74 SOUTHBOUND SCOTT COUNTY | STA 2143+75 PROPOSED 85' TRUSS

DESIGN TEAM VORTHERMS/SCHRODER	ENGLISH	IOWA DOT * OFFICE OF TRAFFIC & SAFETY	VARIOUS COUNTY	PROJECT NUMBER STP-A-000-S(330)--22-00	SHEET NUMBER N.31

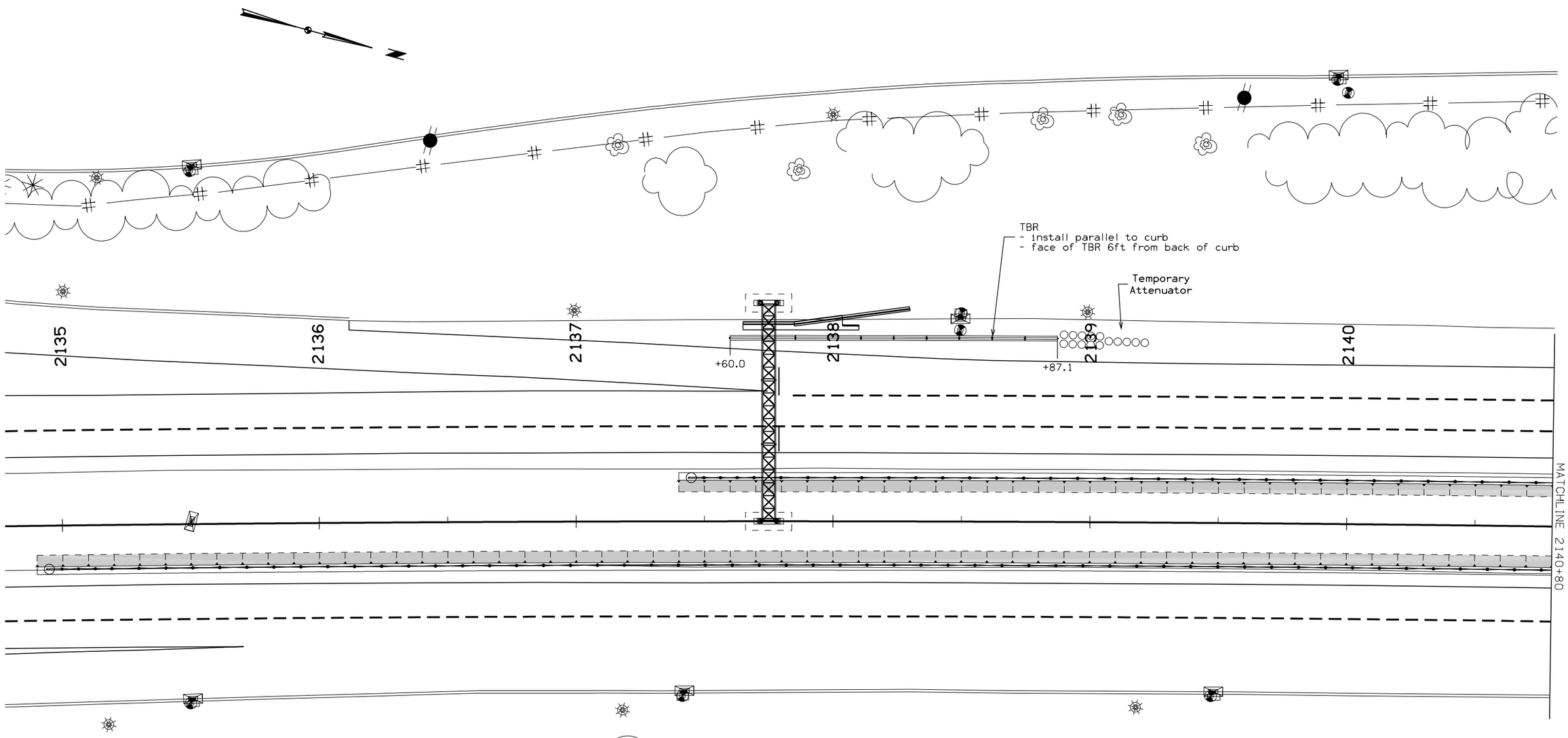

EB WORK AREA

Protect outside footing and work area with temporary barrier rail (TBR) at all times.

A shoulder closure, TC-402, shall be required when there are ongoing activities along the shoulder (i.e. - footing construction, concrete barrier construction, etc.) At other times, the shoulder closure may be removed.

Standard Road Plan TC-451 shall be used to install the sign truss and new/relocated signs. Times of closure shall be coordinated with the Engineer.

MEDIAN WORK AREA

A shoulder closure, TC-402, shall be required when there are ongoing construction activities in the median (i.e. - grading, guardrails, installation, footing construction, etc.) This setup shall remain in place so long as there is continuous activity at the site.

STANDARD ROAD PLANS

TC-1
TC-402
TC-418
TC-420
TC-451
RE-71

0 FEET 50

SAMPLE STAGING SEQUENCE

Setup initial traffic control
Median Grading & Guardrail
Footing construction
Modify traffic control
- take down median RS-62 if next activity is scheduled several weeks from present date

Install sign truss and new/relocated signs
Final seeding

TRAFFIC CONTROL for SITE #12 / DMS #403 I-74 SB - SCOTT COUNTY

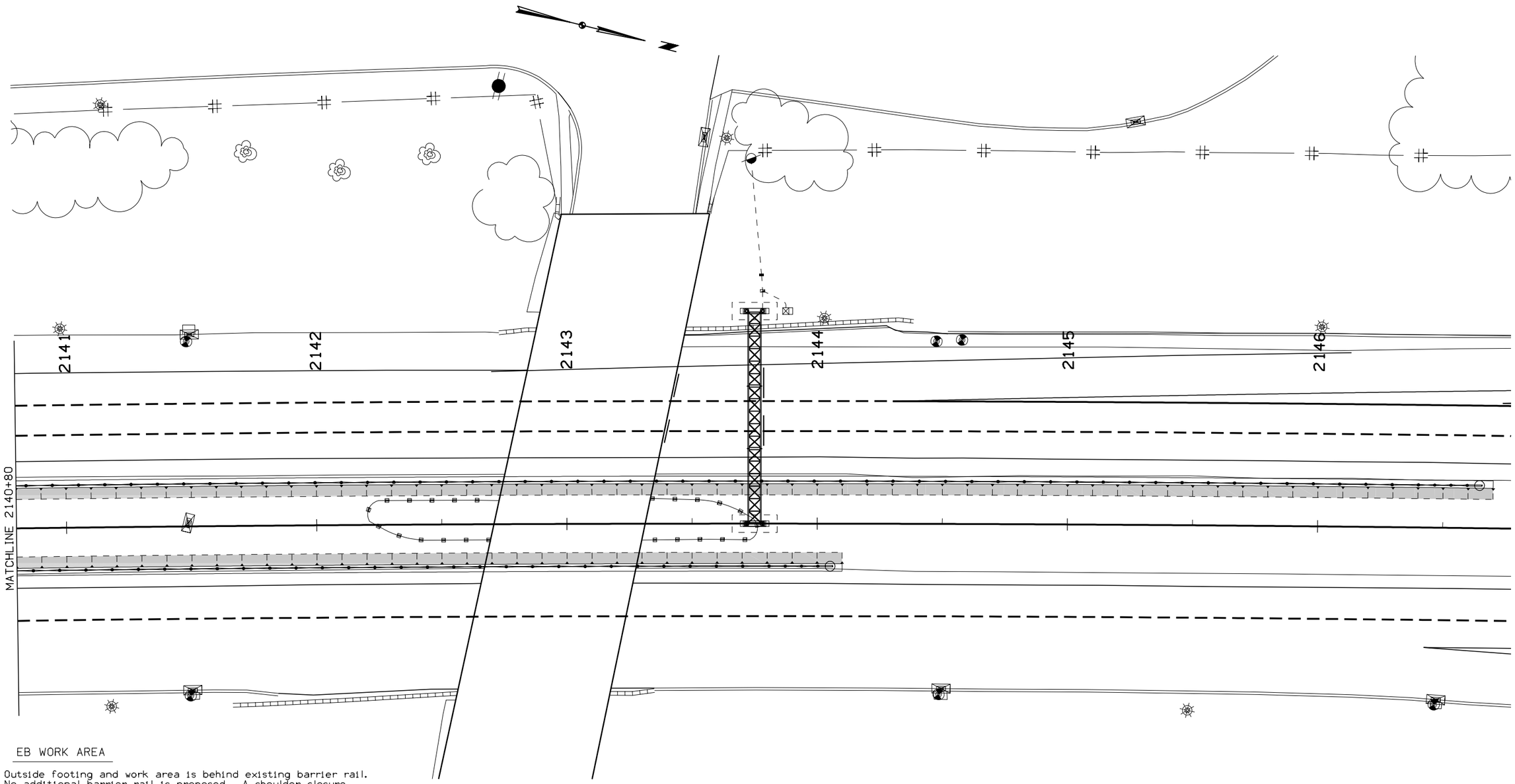

EB WORK AREA

Outside footing and work area is behind existing barrier rail. No additional barrier rail is proposed. A shoulder closure, TC-402, shall be used when there is work being done at the site. At other times, the shoulder closure may be removed.

Standard Road Plan TC-451 shall be used to remove the existing signs from the bridge, and to install the sign truss, DMS, and relocated signs. Times of closure shall be coordinated with the Engineer.

MEDIAN WORK AREA

A shoulder closure, TC-402, shall be required when there are ongoing construction activities in the median (i.e. - grading, guardrails, installation, footing construction, etc.) This setup shall remain in place so long as there is continuous activity at the site.

STANDARD ROAD PLANS

TC-1
TC-402
TC-418
TC-420
TC-451
RE-71

0 FEET 50

SAMPLE STAGING SEQUENCE

Setup initial traffic control
Remove existing guardrail
Median grading & guardrail
Footing construction
Modify traffic control
- take down median RS-62 if next activity is scheduled several weeks from present date

Install sign truss and new/relocated signs
Final seeding

TRAFFIC CONTROL for SITE #12 / DMS #403 I-74 SB - SCOTT COUNTY

DESIGN TEAM VORTHERMS/SCHRODER	ENGLISH	IOWA DOT * OFFICE OF TRAFFIC & SAFETY	VARIOUS COUNTY	PROJECT NUMBER STP-A-000-S(330)--22-00	SHEET NUMBER N.33

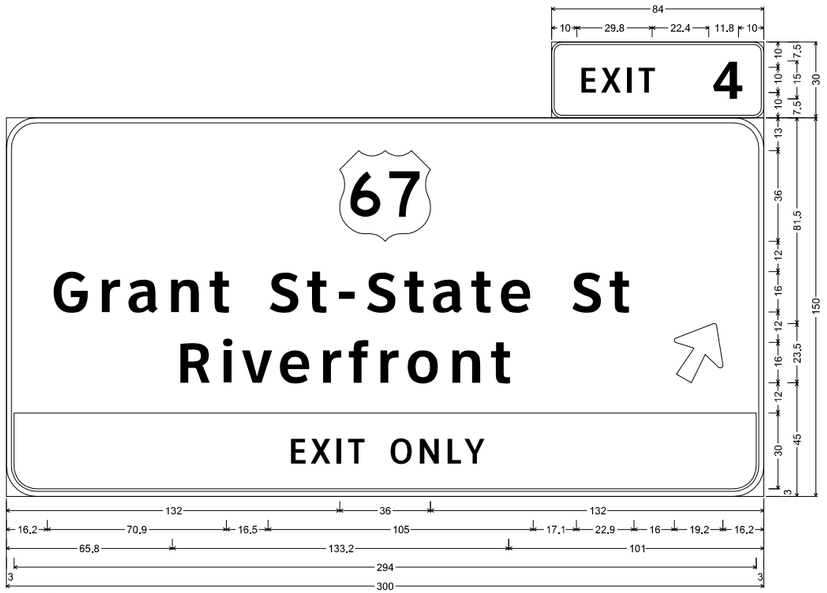

MX-1A

74-82-9A

MX-1; 4.0" Radius, 1.0" Border, White on Green;
[EXIT] ClearviewHwy-4-W; [4] ClearviewHwy-5-W;
12.0" Radius, 2.0" Border, White on Green;
[Grant St-State St] ClearviewHwy-5-W; [Riverfront] ClearviewHwy-5-W; Arrow 8 - 25.0" 60°;

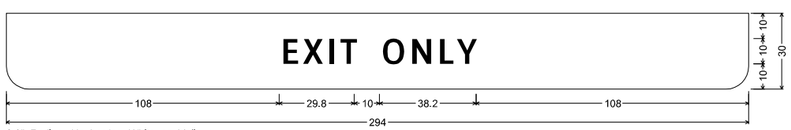

9.0" Radius, No border, White on Yellow;
[EXIT] Black ClearviewHwy-4-W; [ONLY] Black ClearviewHwy-4-W;

DETAILS OF NEW TYPE B SIGNS
for DMS SITE #12
I-74 SB - SCOTT COUNTY

CONTRACT NO.

F.A. RTE.	SECTION	COUNTY	TOTAL SHEETS	SHEET NO.
STA.		TO STA.		
FED. ROAD DIST. NO.	ILLINOIS	FED. AID PROJECT		

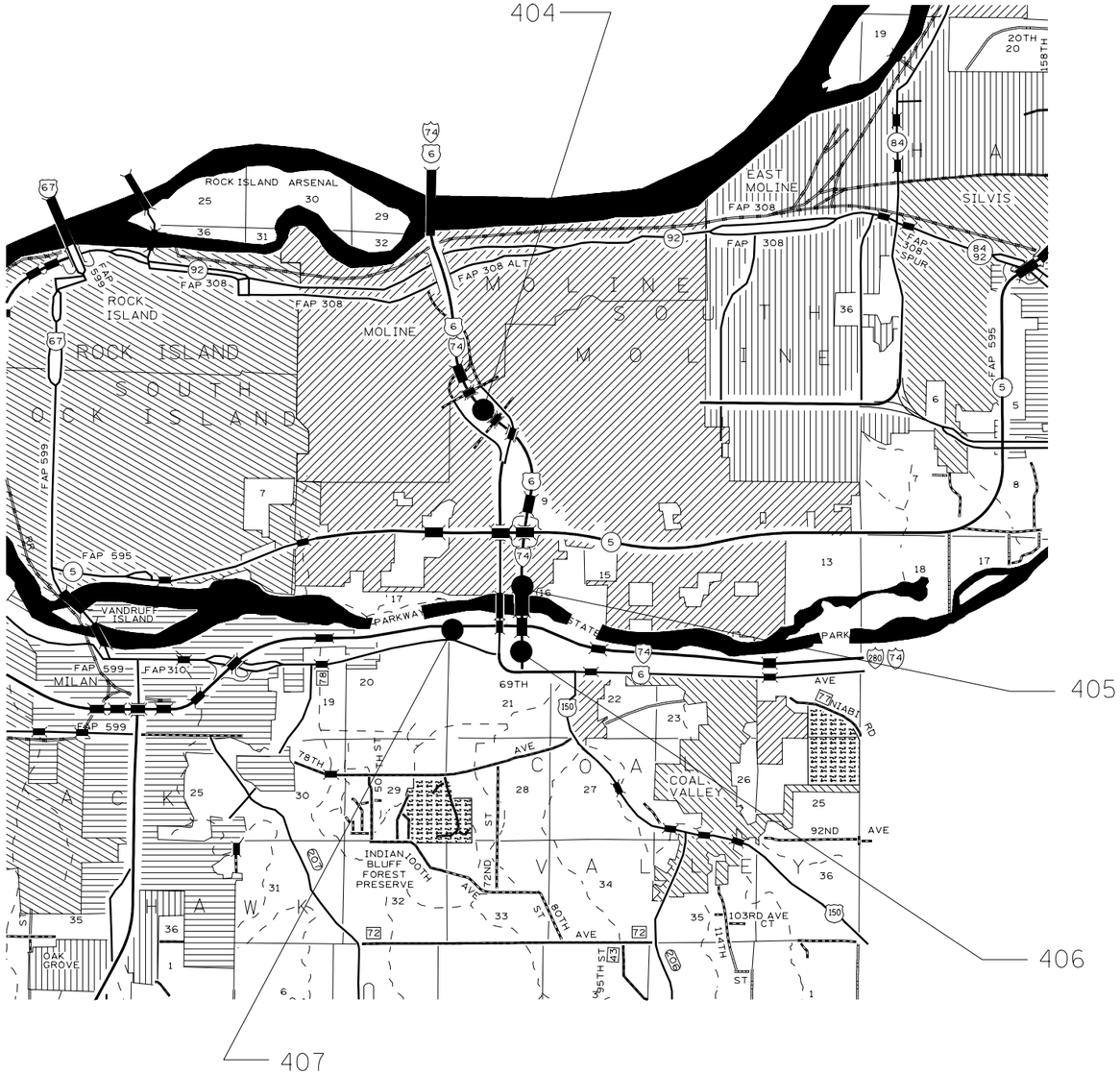

The details and site designs for the side of road DMS locations have been developed jointly between the Iowa Department of Transportation and the Illinois Department of Transportation.

The plan sheets for these locations have been certified by a Licensed Professional Engineer licensed by the State of Iowa as agreed upon by both parties.

PROPOSED DMS IL LOCATIONS

REVISIONS	
NAME	DATE

ILLINOIS DEPARTMENT OF TRANSPORTATION

SCALE: VERT. HORIZ.

DATE

DRAWN BY

CHECKED BY

PLOT DATE = $DATE$
FILE NAME = $FILEL$
PLOT SCALE = $SCALE$
USER NAME = $USER$

PROJECT NUMBER STP-A-000-S(330)--22-00

SHEET NUMBER N.35

CONTRACT NO.

F.A. RTE.	SECTION	COUNTY	TOTAL SHEETS	SHEET NO.
STA.		TO STA.		
FED. ROAD DIST. NO.	ILLINOIS	FED. AID PROJECT		

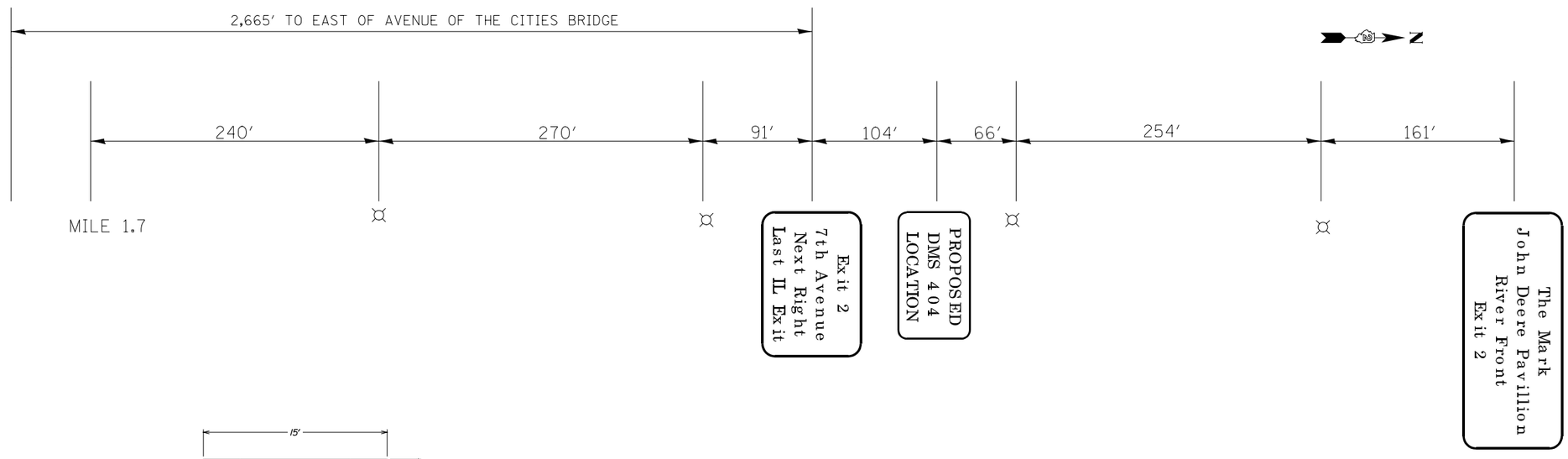

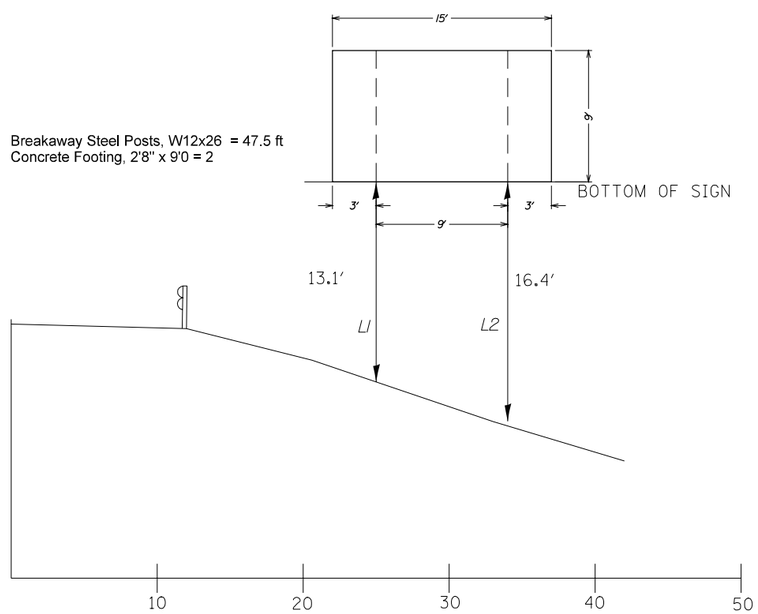

DMS 404		
BS	FS	
10.14		WEST OF FOUNDATION OF EXIT 2 SIGN (105 FT TO THE SOUTH)
	0.32	O FT OFF SET EAST EDGELINE OF WB I-74
	0.64	12 FT OFFSET (OUTSIDE EDGE OF SHOULDER)
	2.80	20.6 FT OFFSET (FENCE)
	3.70	25 FT PROPOSED DMS LEG
	7.00	34 FT PROPOSED DMS LEG
	9.70	42 FT GROUND

TRAFFIC CONTROL

Shoulder closures, TC-402, shall be used for activities at this site.

Lane closures shall not be permitted at this site.

STANDARD ROAD PLANS

RD-21A TC-1
RD-21B TC-402
RD-22A

SITE #404 / DMS #404
I-74 (WB), MILE 1.57
(1/2 MILE N OF AVENUE OF THE CITIES)
NOT TO SCALE

REVISIONS NAME	DATE

ILLINOIS DEPARTMENT OF TRANSPORTATION

SCALE: VERT. HORIZ.
DATE
DRAWN BY
CHECKED BY

PLOT DATE = $DATE$
FILE NAME = $FILE$
PLOT SCALE = $SCALE$
USER NAME = $USER$

CONTRACT NO.

F.A. RTE.	SECTION	COUNTY	TOTAL SHEETS	SHEET NO.
STA.		TO STA.		
FED. ROAD DIST. NO.	ILLINOIS	FED. AID PROJECT		

TRAFFIC CONTROL

Shoulder closures, TC-402, shall be used for activities at this site.

Lane closures shall not be permitted at this site.

STANDARD ROAD PLANS

RD-21A
RD-21B
RD-22A

TC-1
TC-402

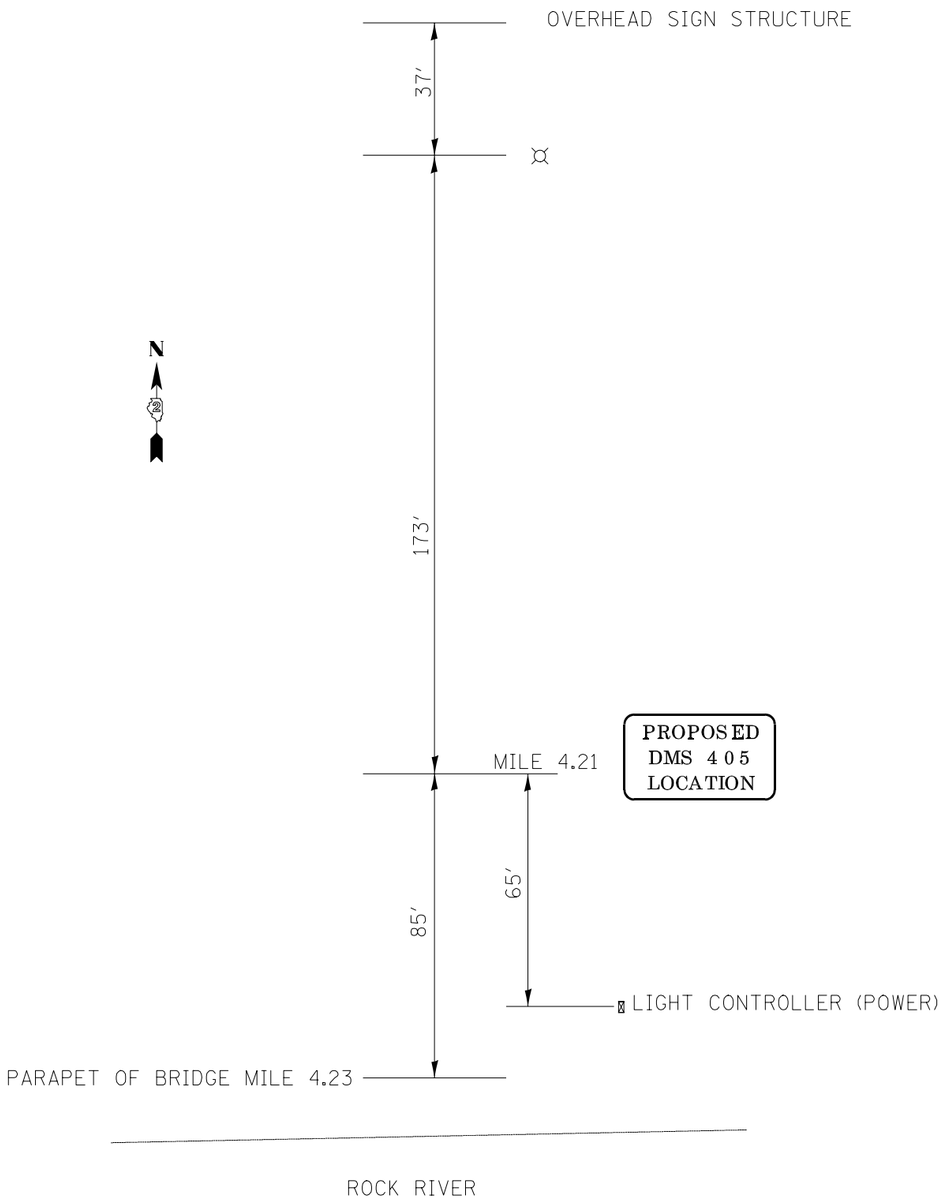

Breakaway Steel Posts, W12x26 = 45.3 ft
Concrete Footing, 2'8" x 9'0 = 2

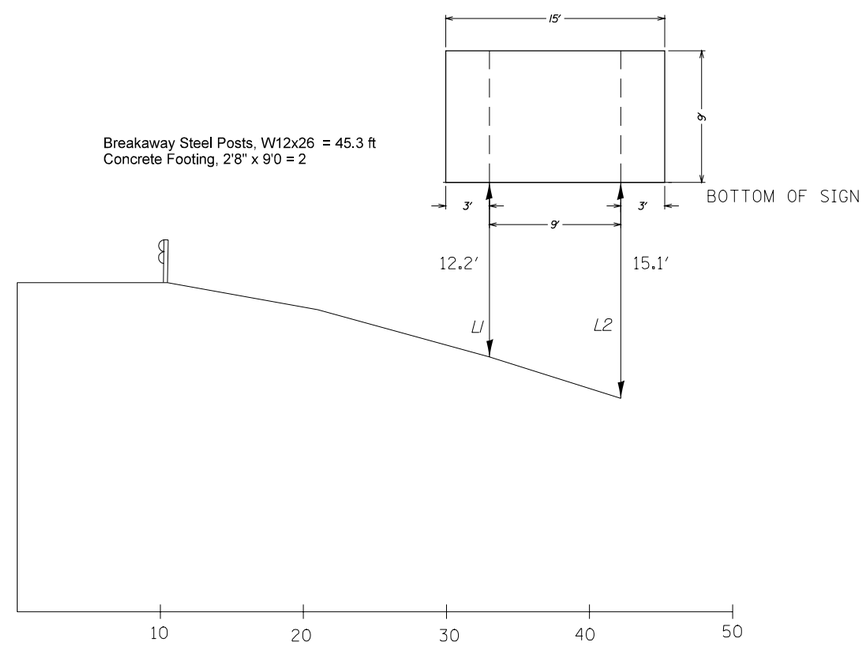

DMS 405		
BS	FS	
3.07		C.P. 903381 EL 581.06 15' SOUTH OF DMS 405 ON EAST SHOULDER OF WB I-74
	3.01	O FT OFFSET EAST EDGELINE OF WB I-74
	3.01	10.5 FT OFFST SHOULDER OF FACE OF GUARDRAIL
	4.90	21 FT OFFSET
	8.20	33 FT OFFSET PROPOSED DMS LEG
	11.10	42 FT OFFSET PROPOSED DMS LEG

SITE #405 / DMS #405
I-74 (WB) JUST NORTH OF
THE ROCK RIVER BRIDGE
(BEHIND GAURDRAIL
NOT TO SCALE

REVISIONS	
NAME	DATE

ILLINOIS DEPARTMENT OF TRANSPORTATION

SCALE: VERT. HORIZ.
DATE
DRAWN BY
CHECKED BY

PLOT DATE = $DATE$
FILE NAME = $FILEL$
PLOT SCALE = $SCALE$
USER NAME = $USER$

PROJECT NUMBER STP-A-000-S(330)--22-00

SHEET NUMBER N.37

CONTRACT NO.

F.A. RTE.	SECTION	COUNTY	TOTAL SHEETS	SHEET NO.
STA.		TO STA.		
FED. ROAD DIST. NO.	ILLINOIS	FED. AID PROJECT		

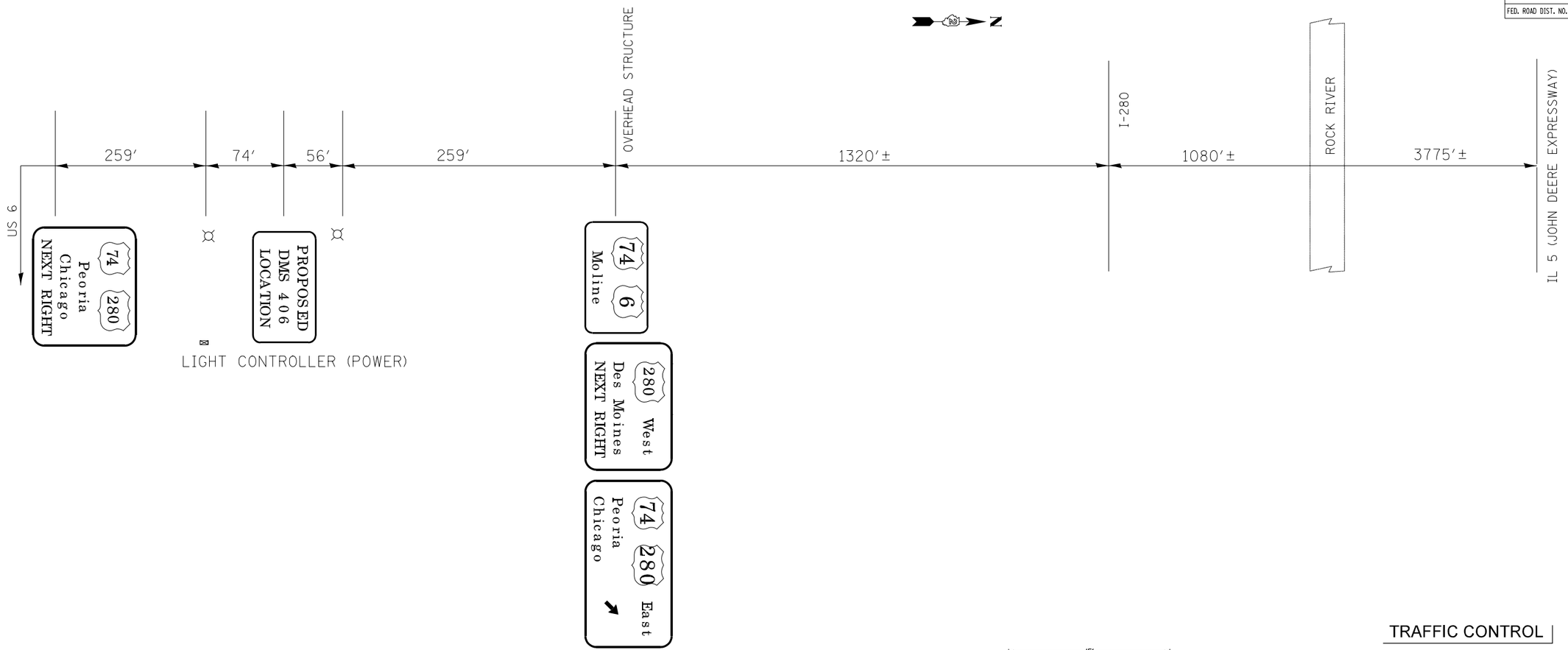

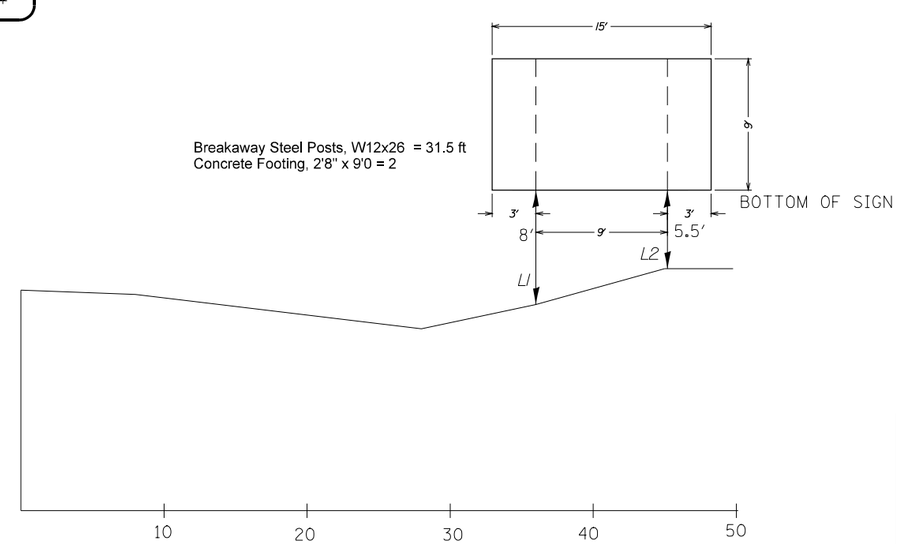

TRAFFIC CONTROL

Shoulder closures, TC-402, shall be used for activities at this site.

Lane closures shall not be permitted at this site.

STANDARD ROAD PLANS

RD-21A
RD-21B
RD-22A
TC-1
TC-402

DMS 406		
BS	FS	
3.01		NORTHWEST CORNER OF LIGHT CONTROLLER FOUNDATION 74 FT FROM DMS 406
	7.00	0 FT OFFSET EAST EDGLINE OF WB I-74
	7.30	8 FT OFFSET OUTSIDE EDGE OF SHOULDER
	9.70	28 FT OFFSET DITCH BOTTOM
	8.00	36 FT OFFSET PROPOSED DMS LEG
	5.50	45 FT OFFSET PROPOSED DMS LEG

SITE #406 / DMS #406
US 6, 700'± NORTH OF
69TH AVENUE/AIRPORT ENTRANCE

REVISIONS	
NAME	DATE

ILLINOIS DEPARTMENT OF TRANSPORTATION

SCALE: VERT. HORIZ.
DATE
DRAWN BY
CHECKED BY

PLOT DATE = $DATE$
FILE NAME = $FILEL$
PLOT SCALE = $SCALE$
USER NAME = $USER$

PROJECT NUMBER STP-A-000-S(330)--22-00

SHEET NUMBER N.38

CONTRACT NO.

F.A. RTE.	SECTION	COUNTY	TOTAL SHEETS	SHEET NO.
STA.		TO STA.		
FED. ROAD DIST. NO.	ILLINOIS	FED. AID PROJECT		

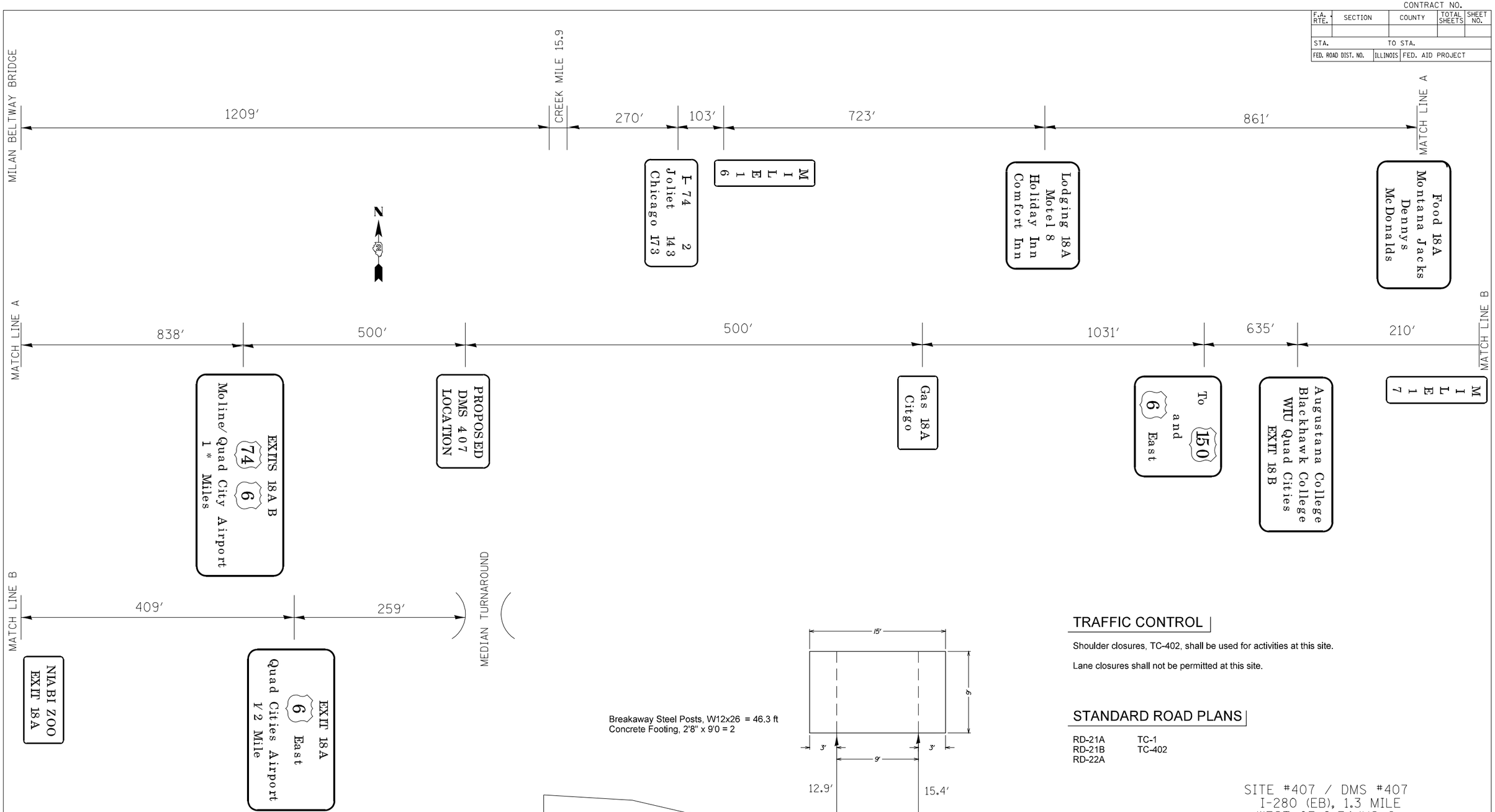

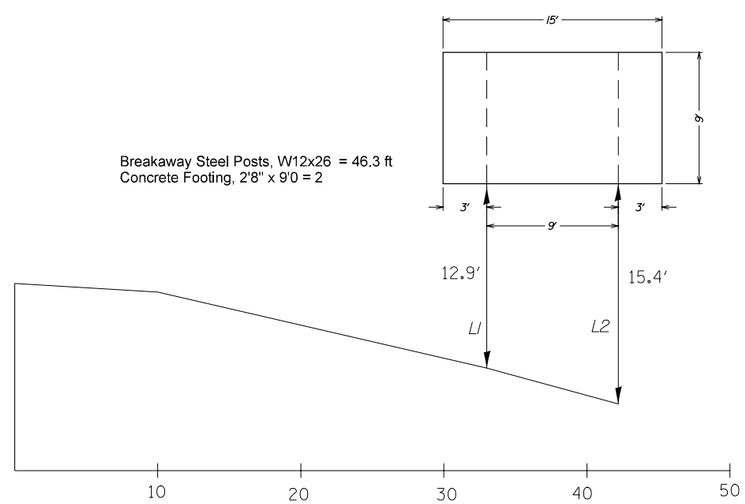

407		
BS	FS	
	2.87	0 FT OFFSET SOUTH EDGELINE FOR I-280 EB
	3.47	10 FT EDGE OF SHOULDER
	8.80	33 FT PROPOSED DMS LEG
	11.30	42 FT OFFSET PROPOSED DMS LEG

TRAFFIC CONTROL

Shoulder closures, TC-402, shall be used for activities at this site.

Lane closures shall not be permitted at this site.

STANDARD ROAD PLANS

RD-21A
RD-21B
RD-22A
TC-1
TC-402

SITE #407 / DMS #407
I-280 (EB), 1.3 MILE
WEST OF I-74/US 6

REVISIONS	
NAME	DATE

ILLINOIS DEPARTMENT OF TRANSPORTATION

SCALE: VERT. HORIZ.
DATE
DRAWN BY
CHECKED BY

PLOT DATE = $DATE$
FILE NAME = $FILEL$
PLOT SCALE = $SCALE$
USER NAME = $USER$

PROJECT NUMBER STP-A-000-S(330)--22-00

SHEET NUMBER N.39

Iowa Bid Item	Item	Illinois Pay Code	Item	Unit	Specification
2533-4980005	MOBILIZATION	67100100	MOBILIZATION	LS	Ia 2001
2599-9999005	IL - TRAFFIC CONTROL & PROTECTION	70101500	TRAFFIC CONTROL AND PROTECTION, STANDARD 701406 (SPECIAL)	EACH	SP
2599-9999009	IL - OVERHEAD SIGN STRUCTURE, TYPE III-A	73300300	OVERHEAD SIGN STRUCTURE SPAN, TYPE III-A	FOOT	SP
2599-9999009	IL - OVERHEAD SIGN STRUCTURE WALKWAY	73305000	OVERHEAD SIGN STRUCTURE WALKWAY	FOOT	SP
2599-9999003	IL - CONCRETE FOUNDATION	73400100	CONCRETE FOUNDATION	CU YD	SP
2599-9999003	IL - DRILLED SHAFT CONCRETE FOUNDATION	73400200	DRILLED SHAFT CONCRETE FOUNDATIONS	CU YD	SP
2599-9999005	DMS INSTALLATION, 125 X 27 PIXEL, OVERHEAD	X0323837	TRUSS MOUNTED DYNAMIC MESSAGE SIGN INSTALLED	EACH	Plan
2599-9999005	IL - IMPACT ATTEN, FULLY REDIR, WIDE, TL 3	Z0030050	INPACT ATTENUATORS FULLY REDIRECTIVE WIDE TEST LEVEL 3	EACH	SP

TABLE OF EQUIVALENT BID ITEMS

This table is provided as a means to understand how the Pay Codes provided by the State of Illinois were converted into bid items for letting in Iowa. Where practical and possible, the Iowa specifications were utilized. For work specifically designed to Illinois standards, the details were either included in U sheets or in the special provision. All descreprencies shall be brought to the Engineer to be addressed.

CONTRACT NO.

F.A. RTE.	SECTION	COUNTY	TOTAL SHEETS	SHEET NO.
STA.		TO STA.		
FED. ROAD DIST. NO.	ILLINOIS	FED. AID PROJECT		

PAY CODE	ITEM	UNIT	DMS 70	DMS 68	TOTAL
67100100	MOBILIZATION	L SUM	0.5	0.5	1
70101500	TRAFFIC CONTROL AND PROTECTION, STANDARD 701406 (SPECIAL)	EACH	0.5	0.5	1
73300300	OVERHEAD SIGN STRUCTURE SPAN, TYPE III-A	FOOT	72	94	166
73305000	OVERHEAD SIGN STRUCTURE WALKWAY	FOOT	13	13	26
73400100	CONCRETE FOUNDATION	CU YD	8.91		8.91
73400200	DRILLED SHAFT CONCRETE FOUNDATIONS	CU YD	10.46	21.46	31.92
X0323837	TRUSS MOUNTED DYNAMIC MESSAGE SIGN INSTALLED	EACH	1	1	2
Z0030050	IMPACT ATTENUATORS FULLY REDIRECTIVE WIDE TEST LEVEL 3	EACH	1		1

REVISIONS	
NAME	DATE

ILLINOIS DEPARTMENT OF TRANSPORTATION

SCALE: VERT. HORIZ.

DATE

DRAWN BY

CHECKED BY

PLOT DATE = $DATE$
FILE NAME = $FILEL$
PLOT SCALE = $SCALE$
USER NAME = $USER$

PROJECT NUMBER STP-A-000-S(330)--22-00

SHEET NUMBER U.02

CONTRACT NO.				
F.A. RTE.	SECTION	COUNTY	TOTAL SHEETS	SHEET NO.
STA.		TO STA.		
FED. ROAD DIST. NO.	ILLINOIS	FED. AID PROJECT		

GENERAL NOTES

1. THE CONTROLLER CABINETS AND JUNCTION BOXES SHALL BE UNPAINTED ALUMINUM SHEET METAL UNLESS OTHERWISE SPECIFIED ON THE PLANS.

2. ALUMINUM PLATE SHALL BE PRODUCED FROM ASTM B221 ALLOY 6061 T6 OR AN EQUIVALENT MATERIAL ACCEPTABLE TO THE ENGINEER.

3. U-BOLT SHALL BE PRODUCED FROM ASTM A276, TYPE 304, 304L, 316, CONDITION A,COLD FINISH OR AN EQUIVALENT MATERIAL ACCEPTABLE TO THE ENGINEER. ALL NUTS SHALL BE STAINLESS STEEL CONFORMING TO ASTM A194, GRADE 8 (ANSI TYPE 304) OR GRADE 8F (ANSI TYPE 303). THE NUTS SHALL BE LOCKNUTS WITH THE NYLON OR STEEL INSERTS AND SEMIFINISHED HEXAGONAL HEADS EQUIVALENT TO THE FINISHED HEX SERIES OF THE AMERICAN NATIONAL STANDARD, ALL WASHERS SHALL BE STAINLESS STEEL CONFORMING TO ASTM A240, TYPE 302.

4. ALL BOLTS, SCREWS, NUTS AND WASHERS SHALL BE STAINLESS STEEL, ANTIFREEZE PASTE COMPOUND SHALL BE USED ON ALL MOUNTING HARDWARE FIELD CONNECTIONS.

5. UNDERGROUND CABLE MARKING TAPE SHALL BE INSTALLED WITH ALL TRENCH AND BACKFILL FOR ELECTRICAL WORK IN ACCORDANCE WITH ARTICLES 815.03(d) AND 1066.05 OF THE STANDARD SPECIFICATIONS.

6. A 1/4" DIA. NYLON ROPE SHALL BE INSTALLED IN ALL CONDUIT RUNS. THE COST OF PULL ROPE SHALL BE INCLUDED IN THE PROPOSED ELECTRIC CABLE INSTALLATION IN THAT CONDUIT.

7. ALL GROUND RODS SUPPLIED FOR THIS PROJECT SHALL BE IN ACCORDANCE WITH ARTICLE 1087.01 EXCEPT THAT THEY SHALL BE 3/4" DIA X 12'-0" LONG. ALL CONNECTIONS TO GROUND RODS SHALL BE MADE VIA EXOTHERMIC WELD. COMPRESSION CLAMPS WILL NOT BE ALLOWED.

8. ALL UTILITIES SHALL BE LOCATED IN FIELD. ILLINOIS STATE LAW REQUIRED A 48-HOUR NOTICE BE GIVEN TO UTILITIES BEFORE DIGGING. FIELD MARKING OF FACILITIES MAY BE OBTAINED BY PROVIDING A MINIMUM OF 96-HOURS ADVANCE NOTICE TO THE RESIDENT ENGINEER SO THAT THE UTILITY COMPANIES CAN BE NOTIFIED. AGENCIES KNOWN TO HAVE FACILITIES WITHIN THE PROJECT AREA ARE SHOWN ON THE THIS SHEET.

9. COORDINATION WITH THE DEPARTMENT'S BUREAU OF OPERATIONS IS REQUIRED BEFORE ANY TRENCHING SHALL BE DONE TO LOCATE HIGHWAY UTILITIESAND TO COORDINATE OTHER FIELD ACTIVITIES.

10. THE AREAS THAT ARE DISTURBED DUE TO DIGGING OR TRENCHING SHALL BE SEEDED ON A WEEKLY BASIS USING SEEDING, CLASS 2 AND MULCH, METHOD 1 SHALL CONFORM TO THE REQUIREMENTS OF SECTIONS 250 AND 251 OF THE STANDARD SPECIFICATIONS EXCEPT THAT NO EMULSIFIED ASPHALT SHALL BE USED. THE COST SHALL BE INCIDENTAL TO THE CONTRACT.

11. NO OVERNIGHT LANE CLOSURES SHALL BE PERMITTED ON THIS PROJECT.

12. ANY GROUND AREA THAT THE CONTRACTOR COMPACTS OR DISTURBS SHOULD BE SEEDED AT THE END OF EACH WEEK WITH CLASS 1 LAWN MIXTURE OR CLASS 2 ROADSIDE MIXTURE.

I-74 & I-280, ROCK ISLAND COUNTY, UTILITIES FOR THE INSTALLATION OF DMS STRUCTURES ON I-280 NEAR NIABI ZOO ROAD AND ON 1-74 NORTH OF 38TH AVENUE

NAME AND ADDRESS OF UTILITY	TYPE	TELEPHONE	JULIE MEMBER
MR JEREMY SCHNACK SBC/AMERITECH TELEPHONE CO 635 - 18TH STREET ROCK ISLAND, IL 61201	TELEPHONE	309-793-4456	YES 800-892-0123
MR JEFF THOMAS MIDAMERICAN ENERGY COMPANY 2811 5TH AVE ROCK ISLAND, IL 61201	ELECTRIC	309-793-3763	YES 800-892-0123
MR SCOTT BULL MIDAMERICAN ENERGY COMPANY 2811 5TH AVE ROCK ISLAND, IL 61201	GAS	309-793-3870	YES 800-892-0123
MR DENNIS JARDING MEDIACOM 3900-26TH AVENUE MOLINE, IL 61265	CATV	309-743-4750	YES 800-892-0123
MR JOHN BROWNING CITY OF MOLINE 3635 4TH AVE MOLINE, IL 61265	WATER & SEWER	309-736-5797	YES 800-892-5469

REVISIONS	
NAME	DATE

ILLINOIS DEPARTMENT OF TRANSPORTATION

SCALE: VERT. HORIZ.

DATE

DRAWN BY

CHECKED BY

PLOT DATE = $DATE$
FILE NAME = $FILEL$
PLOT SCALE = $SCALE$
USER NAME = $USER$

PROJECT NUMBER STP-A-000-S(330)--22-00

SHEET NUMBER U.03

CONTRACT NO.

F.A. RTE.	SECTION	COUNTY	TOTAL SHEETS	SHEET NO.
STA.		TO STA.		
FED. ROAD DIST. NO.	ILLINOIS	FED. AID PROJECT		

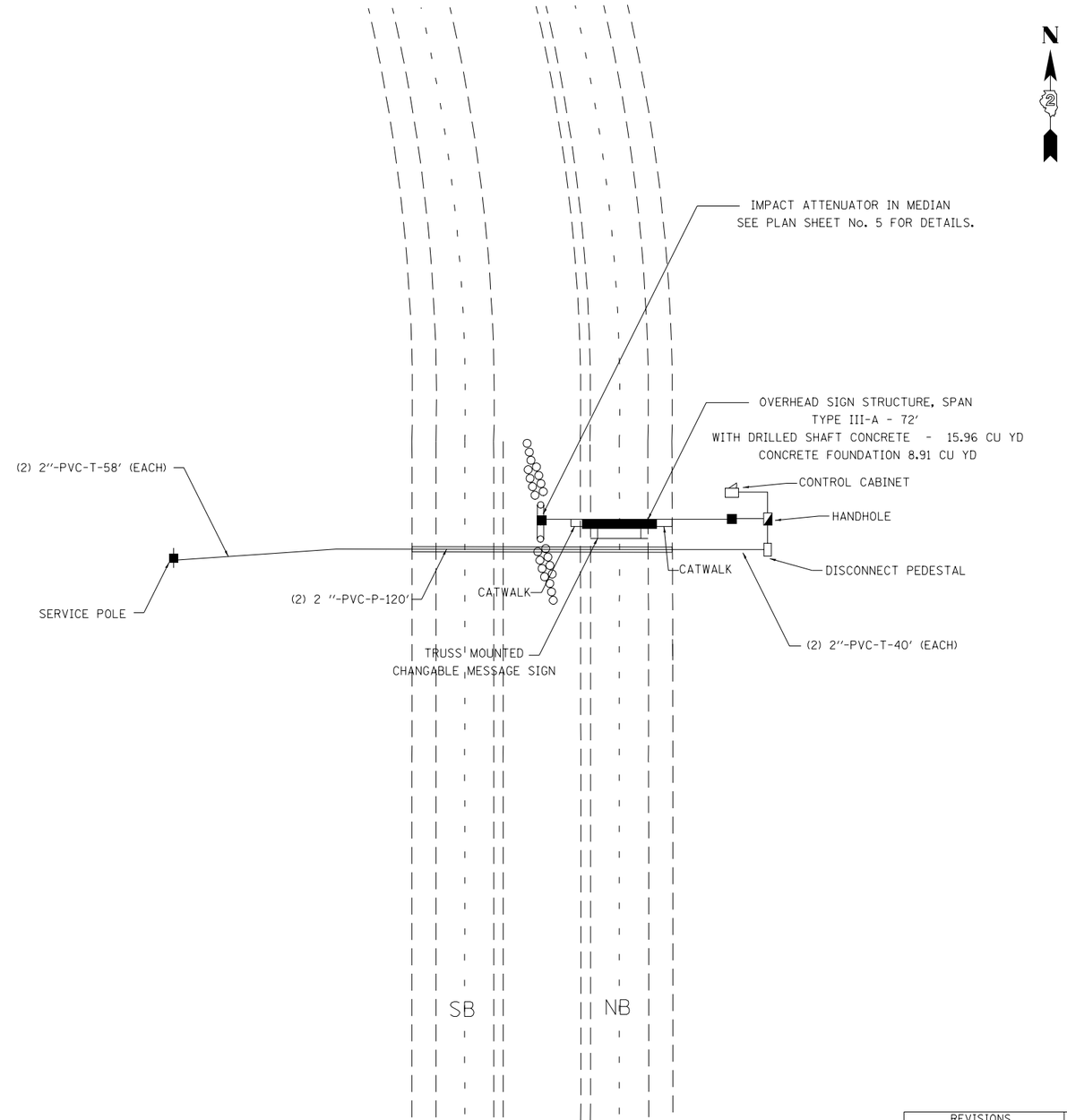

I-74 NB
STA 165+82
DMS #70

NOT TO SCALE

REVISIONS	
NAME	DATE

ILLINOIS DEPARTMENT OF TRANSPORTATION

SCALE: VERT. HORIZ.

DATE

DRAWN BY

CHECKED BY

PLOT DATE = $DATE$
FILE NAME = $FILEL$
PLOT SCALE = $SCALE$
USER NAME = $USER$

PROJECT NUMBER STP-A-000-S(330)--22-00

SHEET NUMBER U.04

CONTRACT NO.				
F.A. RTE.	SECTION	COUNTY	TOTAL SHEETS	SHEET NO.
STA.		TO STA.		
FED. ROAD DIST. NO.	ILLINOIS	FED. AID PROJECT		

POUR CONCRETE AS NECESSARY TO CLOSE GAP BETWEEN SEPARATE PIER COLUMNS, TO A HEIGHT OF 24 IN (600m) ABOVE GROUND LINE, OR PLACE CONCRETE BARRIER ARRAY. NOT REQUIRED FOR PIERS WITH CONTINUOUS, SMOOTH TRAFFIC FACE

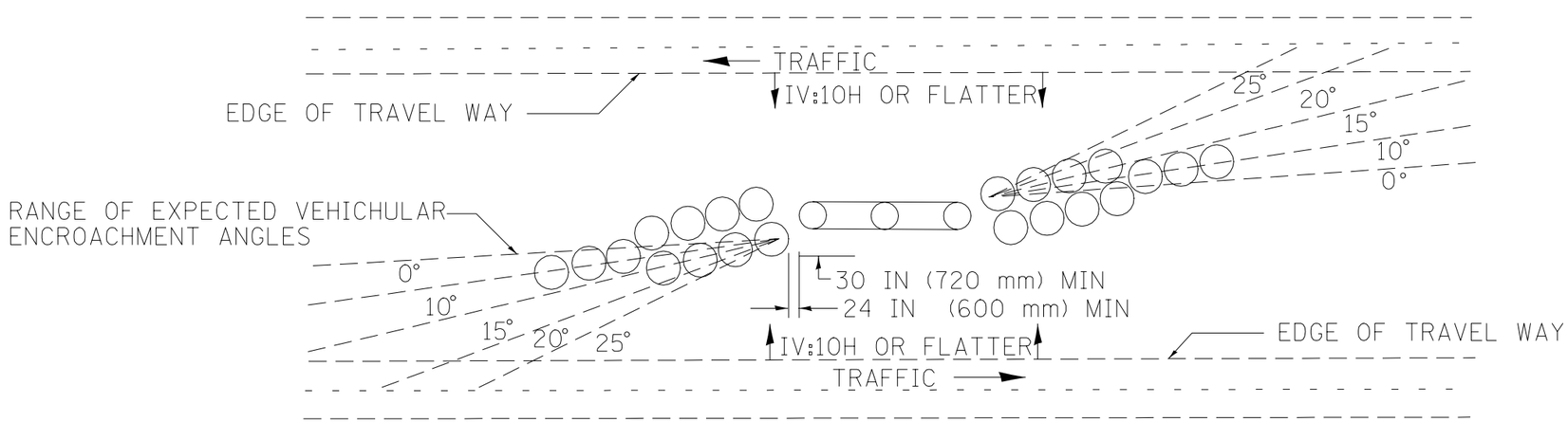

PLAN

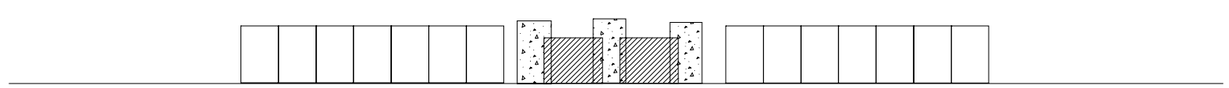

ELEVATION

TYPICAL INSTALLATION OF A FREESTANDING, SAND-FILLED, CONTAINER-TYPE IMPACT ATTENUATOR IN MEDIAN

ANGLE IMPACT & POSITIONING DESIGN FOR SAND BARRELS

FIGURE 1

IMPACT ATTENUATOR IN MEDIAN

DMS #70 STA 165+82

REVISIONS	
NAME	DATE

ILLINOIS DEPARTMENT OF TRANSPORTATION

SCALE: VERT. HORIZ.

DATE

DRAWN BY

CHECKED BY

PLOT DATE = $DATE$
FILE NAME = $FILEL$
PLOT SCALE = $SCALE$
USER NAME = $USER$

CONTRACT NO.

F.A. RTE.	SECTION	COUNTY	TOTAL SHEETS	SHEET NO.
STA.		TO STA.		
FED. ROAD DIST. NO.	ILLINOIS	FED. AID PROJECT		

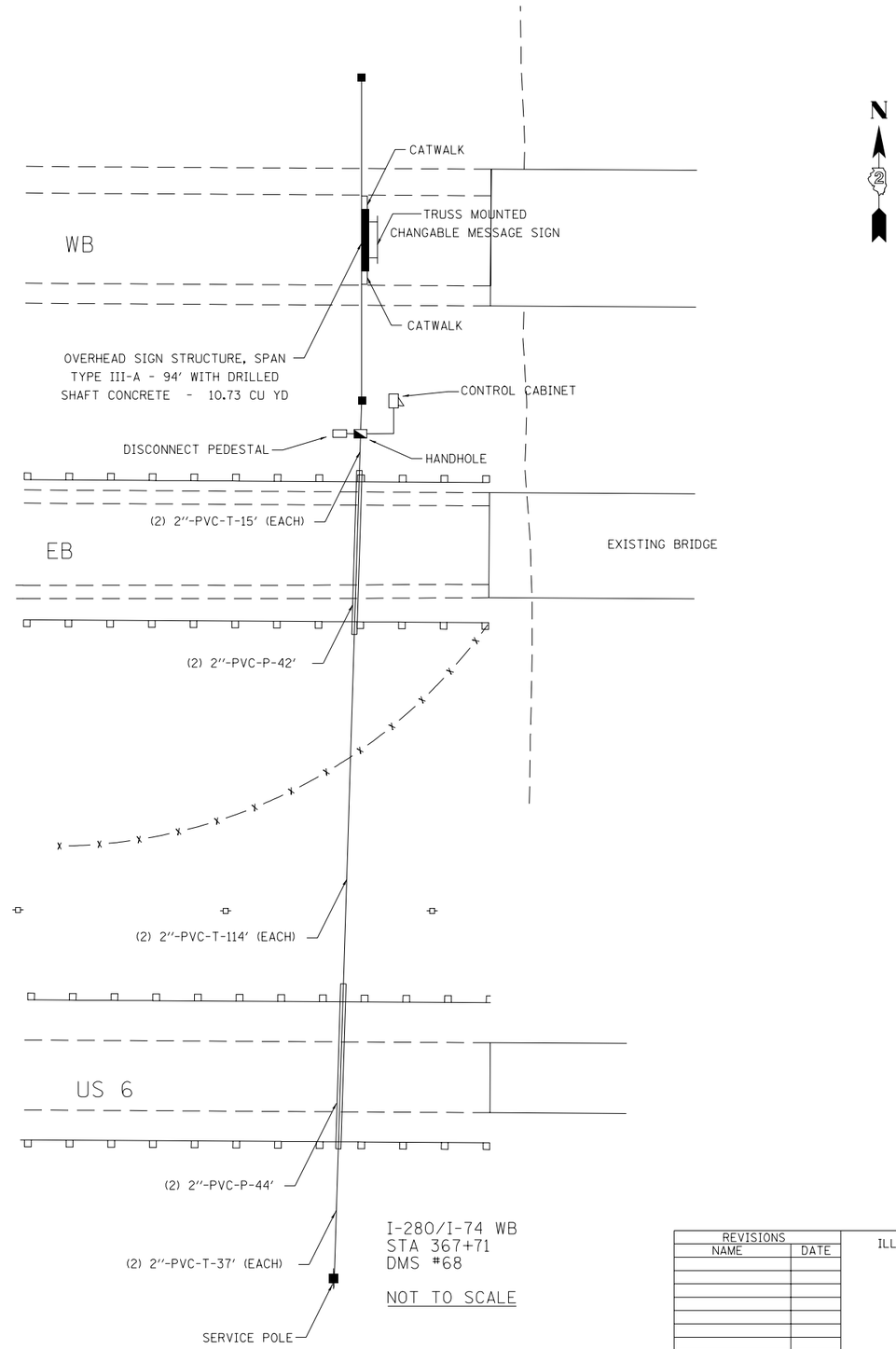

I-280/I-74 WB
STA 367+71
DMS #68

NOT TO SCALE

REVISIONS	
NAME	DATE

ILLINOIS DEPARTMENT OF TRANSPORTATION

SCALE: VERT. HORIZ.

DATE

DRAWN BY

CHECKED BY

PLOT DATE = $DATE$
FILE NAME = $FILEL$
PLOT SCALE = $SCALE$
USER NAME = $USER$

PROJECT NUMBER STP-A-000-S(330)--22-00

SHEET NUMBER U.06

STATE OF ILLINOIS
DEPARTMENT OF TRANSPORTATION

ROUTE NO.	SECTION	COUNTY	TOTAL SHEETS	SHEET NO.
I-74 I-280	-	ROCK ISLAND		
FED. ROAD DIST. NO. 7		ILLINOIS	FED. AID PROJECT-	

SHEET NO. -
- SHEETS

Contract #

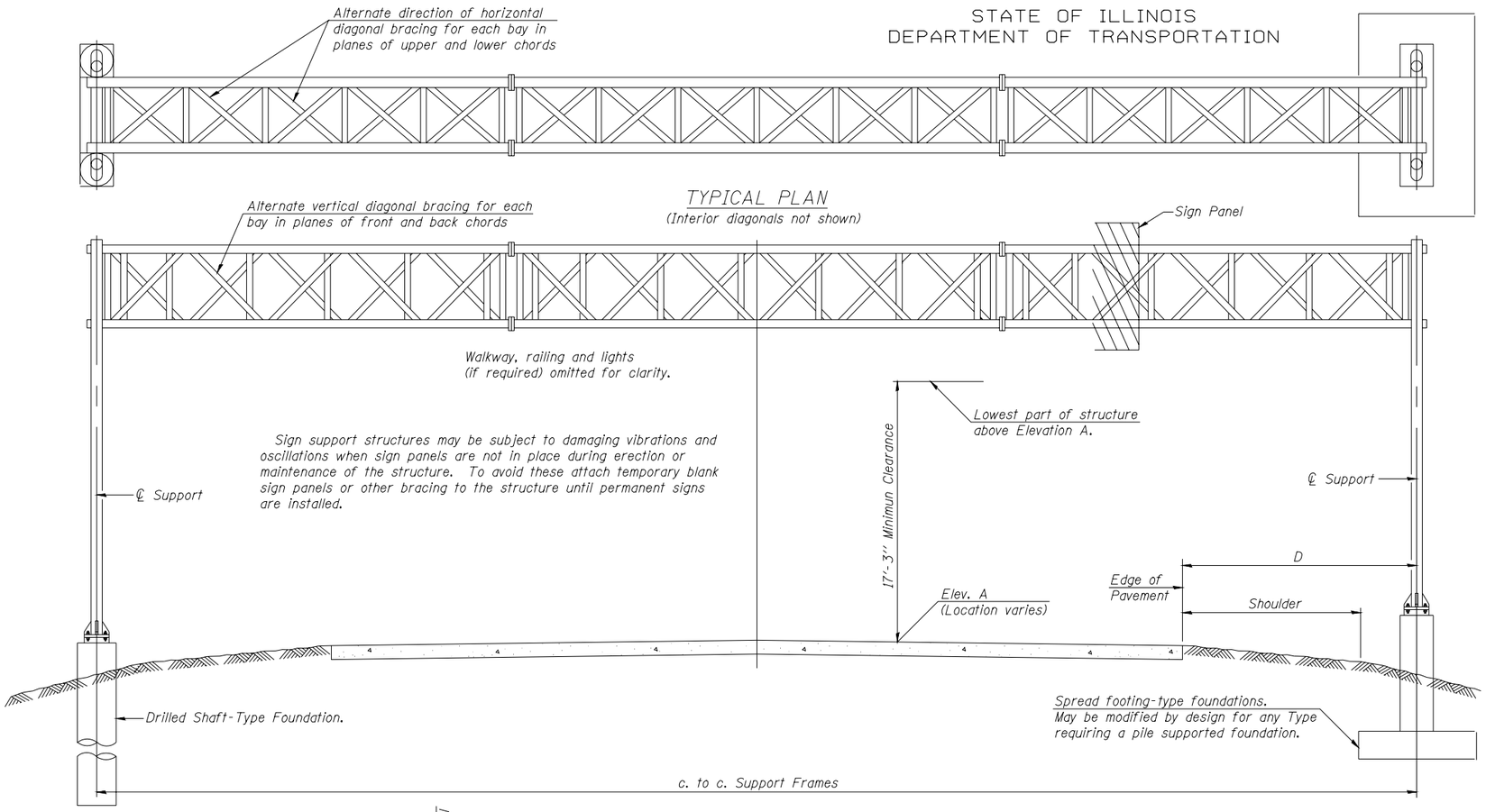

TYPICAL PLAN
(Interior diagonals not shown)

TYPICAL ELEVATION
(Looking at Face of Signs**)

Elev. A = Elevation at point of minimum clearance to sign, walkway support or truss.

Structure Number	Station	Design Truss Type	c. to c. Supports	Elev. A	Dim. D	Height of Tallest Sign	Total Sign Area
2S081I074L006.9	165+82	III-A	72'	639.38	35'	7'10 1/16"	226.2 SQ FT
2S081I280L003.3	367+71	III-A	94'	573.98	35'	7'10 1/16"	226.2 SQ FT

**Looking upstation for structures with signs both sides.

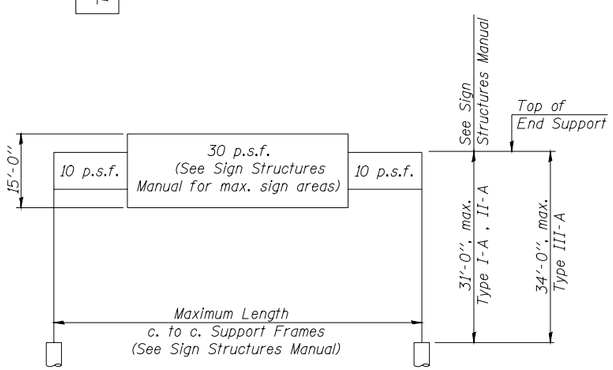

DESIGN WIND LOADING DIAGRAM

Parameters shown are basis for I.D.O.T. Standards and Sign Manual Tables. Installations not within dimensional limits shown require special analysis for all components.

GENERAL NOTES

DESIGN: AASHTO Standard Specifications for Structural Supports for Highway Signs, Luminaires and Traffic Signals. ("AASHTO Specifications")

CONSTRUCTION: Current (at time of letting) Illinois Department of Transportation Standard Specifications for Road and Bridge Construction, Supplemental Specifications and Special Provisions. ("Standard Specifications")

LOADING: 90 M.P.H. WIND VELOCITY

WIND LOADING: 30 p.s.f. normal to Sign Panel Area and truss elements not behind sign Loading Diagram.

WALKWAY LOADING: Dead load plus 500 lbs. concentrated live load.

DESIGN STRESSES:
Field Units
f'c = 3,500 p.s.i.
fy = 60,000 p.s.i. (reinforcement)

WELDING: All welds to be continuous unless otherwise shown. All welding to be done in accordance with current AWS D1.1 and D1.2 Structural Welding Codes (Steel and Aluminum) and the Standard Specificiations.

MATERIALS: Aluminum Alloys as shown throughout plans. All Structural Steel Pipe shall be ASTM A53 Grade B with a minimum yield of 35,000 p.s.i., or A500 Grade B or C with a minimum yield of 46,000 p.s.i. If A500 pipe is substituted for A53, then the outside diameter shall be as detailed and wall thickness greater than or equal to A53.
All Structural Steel Plates and Shapes shall conform to AASHTO M270 Gr. 36, Gr. 50 or Gr. 50W*. Stainless steel for shims, sleeves and handhole covers shall be ASTM A240, Type 302 or 304, or another alloy suitable for exterior exposure and acceptable to the Engineer.
The steel pipe and stiffening ribs at the base plate for the column shall have a minimum longitudinal Charpy V-Notch (CVN) energy of 15 lb.-ft. at 40° F. (Zone 2) before galvanizing.

FASTENERS FOR ALUMINUM TRUSSES: All bolts noted as "high strength" must satisfy the requirements of AASHTO M164 (ASTM A325), or approved alternate, and must have matching lock nuts. Threaded studs for splices (if Members interfere) must satisfy the requirements of ASTM A449, ASTM A193, Grade B7, or approved alternate, and must have matching lock nuts. Bolts and lock nuts not required to be high strength must satisfy the requirements of ASTM A307. All bolts and lock nuts must be hot dip galvanized per AASHTO M232. The lock nuts must have nylon or steel inserts. A stainless steel flat washer conforming to ASTM A240 Type 302 or 304, is required under both head and nut or under both nuts where threaded studs are used. High strength bolt installation shall conform to Article 505.04 (f) (2)d of the IDOT Standard Specifications for Road and Bridge Construction. Rotational capacity ("ROCAP") testing of bolts will not be required.

U-BOLTS AND EYEBOLTS: U-Bolts and Eyebolts must be produced from ASTM A276 Type 304, 304L, 316 or 316L, Condition A, cold finished stainless steel, or an equivalent material acceptable to the Engineer. All nuts for U-Bolts and Eyebolts must be lock nuts equivalent to ASTM A307 with nylon or steel inserts and hot dip galvanized per AASHTO M232. A stainless steel flat washer conforming to ASTM A240, Type 302 or 304, is required under each U-Bolt and Eyebolt lock nut.

GALVANIZING: All Steel Grating, Plates, Shapes and Pipe shall be Hot Dip Galvanized after fabrication in accordance with AASHTO M111. Painting is not permitted.

ANCHOR RODS: Shall conform to AASHTO M314 Gr. 36 or 55 with a minimum Charpy V-Notch (CVN) energy of 15 lb.-ft. at 40° F.

CONCRETE SURFACES: All concrete surfaces above an elevation 6" below the lowest final ground line at each foundation shall be cleaned and coated with Bridge Seat Sealer in accordance with the Standard Specifications.

REINFORCEMENT BARS: Reinforcement Bars designated (E) shall be epoxy coated in accordance with the Standard Specifications.

* If M270 Gr. 50W (M222) steel is proposed, chemistry for plate to be used shall first be approved by the Engineer as suitable for galvanizing and welding.

TOTAL BILL OF MATERIAL

ITEM	UNIT	TOTAL
OVERHEAD SIGN STRUCTURE SPAN TYPE I-A	Foot	
OVERHEAD SIGN STRUCTURE SPAN TYPE II-A	Foot	
OVERHEAD SIGN STRUCTURE SPAN TYPE III-A	Foot	166
OVERHEAD SIGN STRUCTURE WALKWAY TYPE A	Foot	26
CONCRETE FOUNDATIONS	Cu. Yds.	8.91
DRILLED SHAFT CONCRETE FOUNDATIONS	Cu. Yds.	31.92

NUMBER	REVISION	DATE

OVERHEAD SIGN STRUCTURES
GENERAL PLAN & ELEVATION
ALUMINUM TRUSS & STEEL SUPPORTS

DESIGNED -
CHECKED -
DRAWN -
CHECKED -

- 200
EXAMINED
ENGINEER OF BRIDGE DESIGN
PASSED
ENGINEER OF BRIDGES AND STRUCTURES

OS-A-1 7/01/2006

STATE OF ILLINOIS
DEPARTMENT OF TRANSPORTATION

ROUTE NO.	SECTION	COUNTY	TOTAL SHEETS	SHEET NO.
I-74 I-280	-	ROCK ISLAND		
FED. ROAD DIST. NO. 7		ILLINOIS	FED. AID PROJECT-	

SHEET NO. -
- SHEETS

Contract #

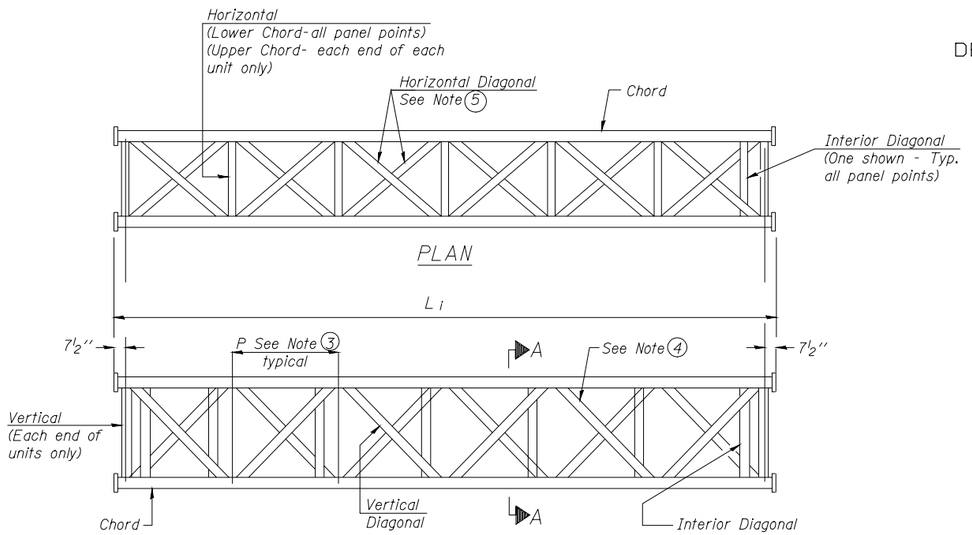

ELEVATION
TYPICAL INTERIOR UNIT
Even number of panels/interior unit required.

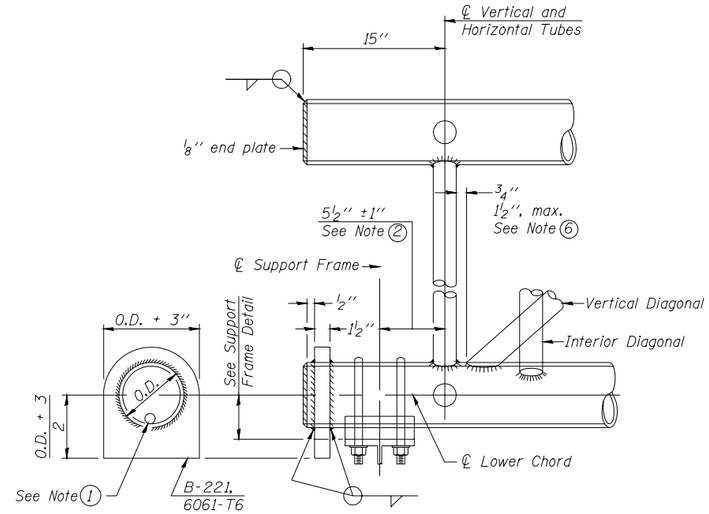

SUPPORT END DETAIL FOR EXTERIOR UNIT

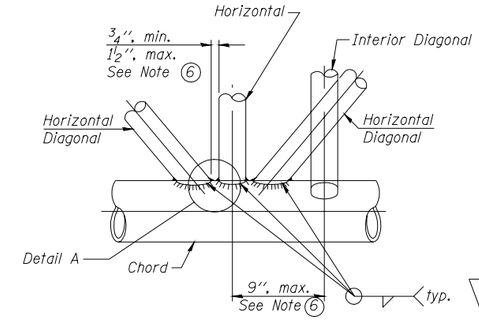

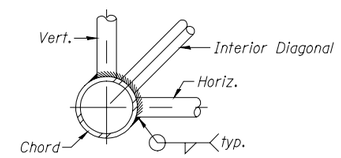

TYPICAL JOINT DETAILS

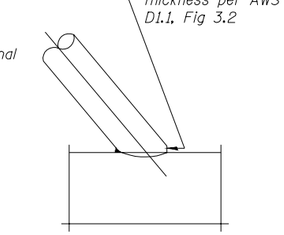

DETAIL A

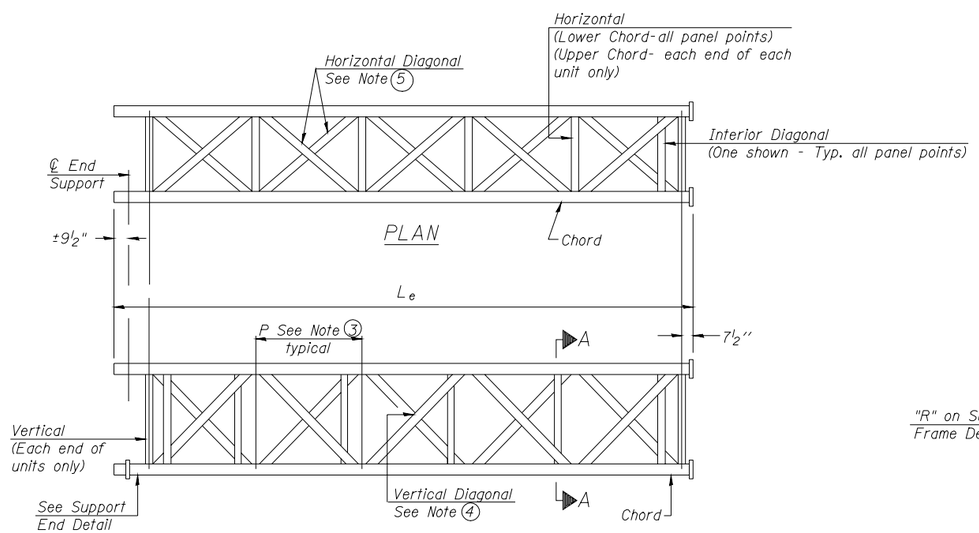

ELEVATION
TYPICAL EXTERIOR UNIT
Even or odd number of panels/exterior units allowed.

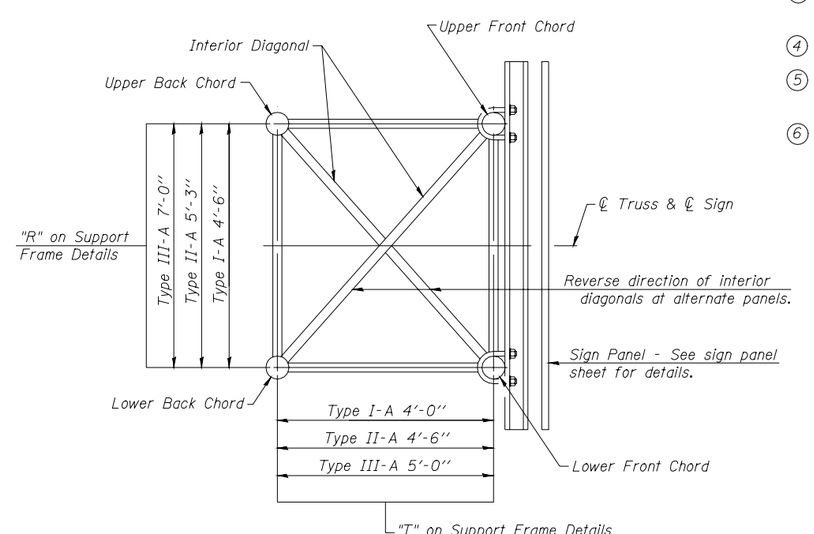

SECTION A-A

NOTES

1. Contractor may alternatively use standard aluminum drive-fit cap to close end. ½'' ϕ drain hole in end plate/drive-fit cap. (Typ. at ends of all chords)
2. 5½'' end dimension may vary by ±1'' to provide uniform panel spacing (P).
3. Panel spacing (P) shall be uniform for entire truss and between 4'-0'' and 5'-0'' for Type I-A or 4'-0'' and 5'-6'' for Types II-A and III-A.
4. Vertical Diagonals in front and back face shall alternate.
5. Hidden lines show wind bracing alternates direction between planes of top and bottom chords.
6. All diagonals shall be detailed for minimum offset from the panel point based on the following: Offset shall be such as to provide a ¾'' minimum to 1½'' maximum clearance between any diagonal and any horizontal or vertical member, and to provide clearance for U-bolt connections of signs or walkway brackets.

OVERHEAD SIGN STRUCTURES
ALUMINUM TRUSS DETAILS
FOR TRUSS TYPES I-A, II-A AND III-A

DESIGNED -	
CHECKED -	
DRAWN -	
CHECKED -	

- 200
EXAMINED
ENGINEER OF BRIDGE DESIGN
PASSED
ENGINEER OF BRIDGES AND STRUCTURES

NUMBER	REVISION	DATE

OS-A-2 7/01/2006

PROJECT NUMBER STP-A-000-S(330)--22-00 SHEET NUMBER U.08

STATE OF ILLINOIS
DEPARTMENT OF TRANSPORTATION

* Center of horizontal to center of splice dimension may vary. Verify before drilling holes in mounting tube.

ROUTE NO.	SECTION	COUNTY	TOTAL SHEETS	SHEET NO.
I-74 I-280	-	ROCK ISLAND		
FED. ROAD DIST. NO. 7		ILLINOIS	FED. AID PROJECT-	

SHEET NO. - SHEETS

Contract #

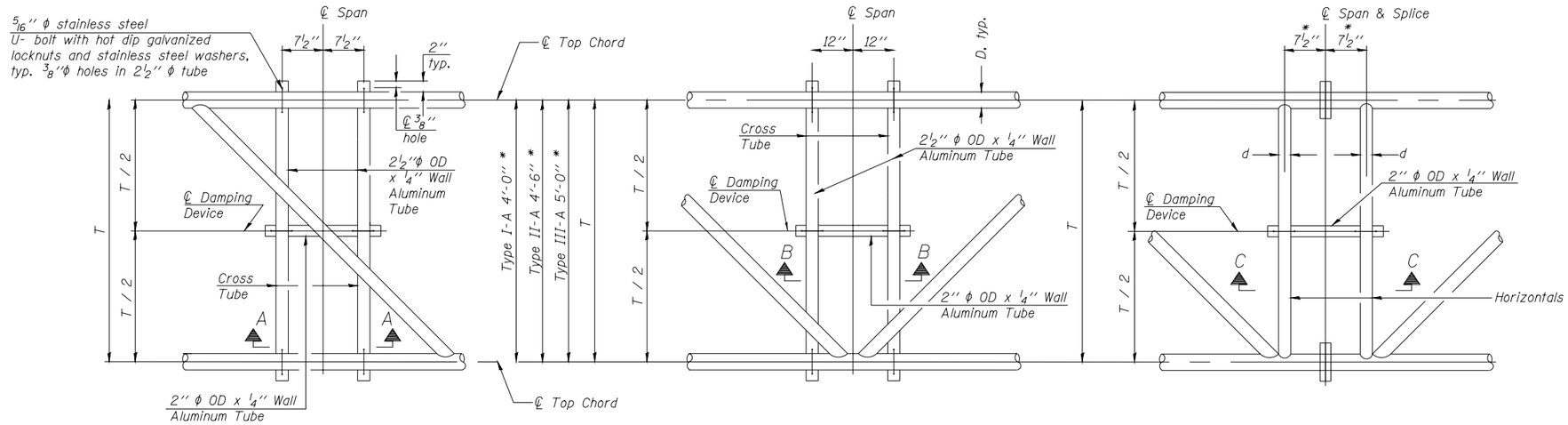

PLAN DETAIL "A"
℄ Span between Panel Points

PLAN DETAIL "B"
℄ Span at Panel Point

PLAN DETAIL "C"
℄ Span at ℄ Chord Splice

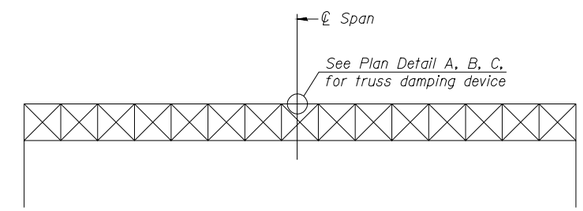

ELEVATION
Aluminum Overhead Sign Truss

NOTES

Damper: One damper per truss. (31 lbs. Stockbridge-Type Aluminum) Cost included in Overhead Sign Structure...

Materials: Aluminum tubes shall be ASTM B221 alloy 6061 temper T6. Cost included in Overhead Sign Structure...

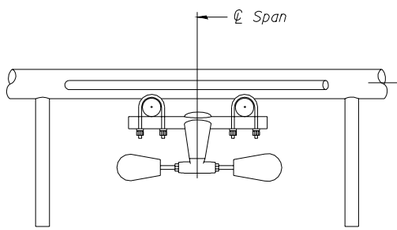

SECTION A-A

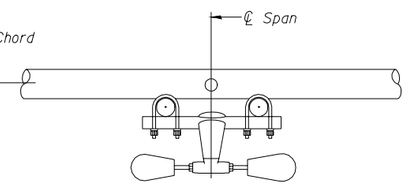

SECTION B-B

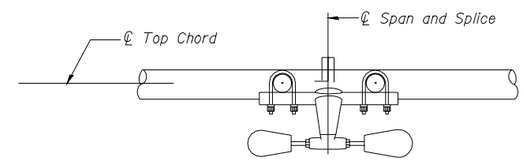

SECTION C-C

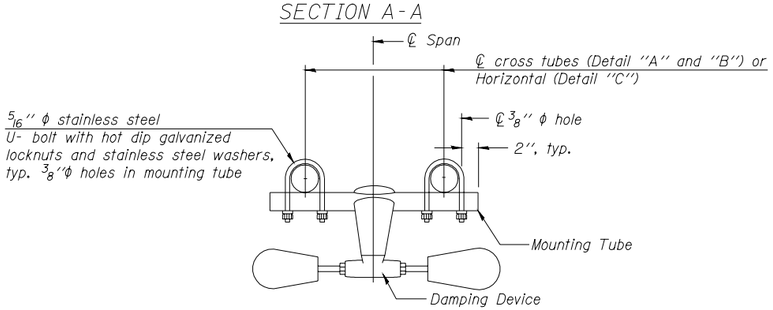

TRUSS DAMPING DEVICE CONNECTION DETAIL
(Typical)

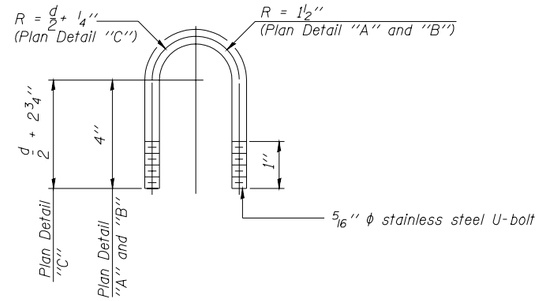

DAMPING DEVICE MOUNTING TUBE U-BOLT DETAIL
(Typical)

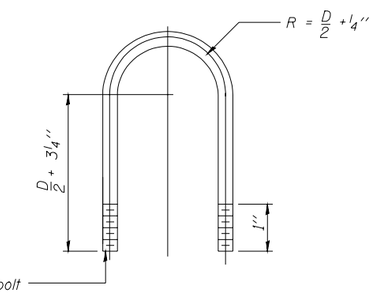

TOP CHORD TO CROSS TUBE U-BOLT DETAIL
(Typical - Detail ''A'' and ''B'')

OVERHEAD SIGN STRUCTURE
DAMPING DEVICE

DESIGNED -	
CHECKED -	
DRAWN -	
CHECKED -	

\- 200
EXAMINED
ENGINEER OF BRIDGE DESIGN
PASSED
ENGINEER OF BRIDGES AND STRUCTURES

OS-A-D 7/01/2006

PROJECT NUMBER STP-A-000-S(330)--22-00

SHEET NUMBER U.09

ROUTE NO.	SECTION	COUNTY	TOTAL SHEETS	SHEET NO.
I-74 I-280	-	ROCK ISLAND		
FED. ROAD DIST. NO. 7		ILLINOIS	FED. AID PROJECT-	

SHEET NO. -
- SHEETS

STATE OF ILLINOIS
DEPARTMENT OF TRANSPORTATION

TRUSS UNIT TABLE

Structure Number	Station	Design Truss Type	Exterior Units (2)			Interior Unit				Upper & Lower Chord		Verticals; Horizontals; Vertical, Horizontal, and Interior Diagonals		Camber at Midspan	Splicing Flange					
															Bolts		Weld Sizes			
			No. Panels per Unit	Unit Lgth.(L_e)	Panel Lgth.(P)	No. Req'd.	No. Panels per Unit	Unit Lgth.(L_i)	Panel Lgth.(P)	O.D.	Wall	O.D.	Wall		No./Splice	Dia.	W	W_1	A	B
2S081I074L006.9	165+82	III-A	7	36'-10½"	5'-0"	-	-	-	-	7	5/16"	3¼"	5/16"	1½"	6	1"	7/16"	5/16"	11½"	15"
2S081I280L003.3	367+71	III-A	6	32'-1½"	5'-0½"	1	6	31'-6"	5'-0½"	7	5/16"	3¼"	5/16"	2¼"	6	1"	7/16"	5/16"	11½"	15"

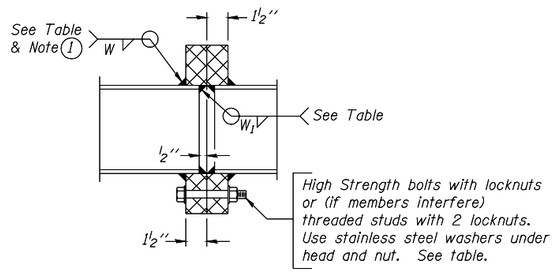

SECTION B-B

1 Splicing Flanges shall be attached to each truss unit with the truss shop assembled to camber shown. Truss units shall be in proper alignment and flange surfaces shall be shop bolted into full contact before welding. Sufficient external welds or tacks shall be made to secure flanges until remaining welds are made after disassembly. Adjacent flanges shall be "match marked" to insure proper field assembly.

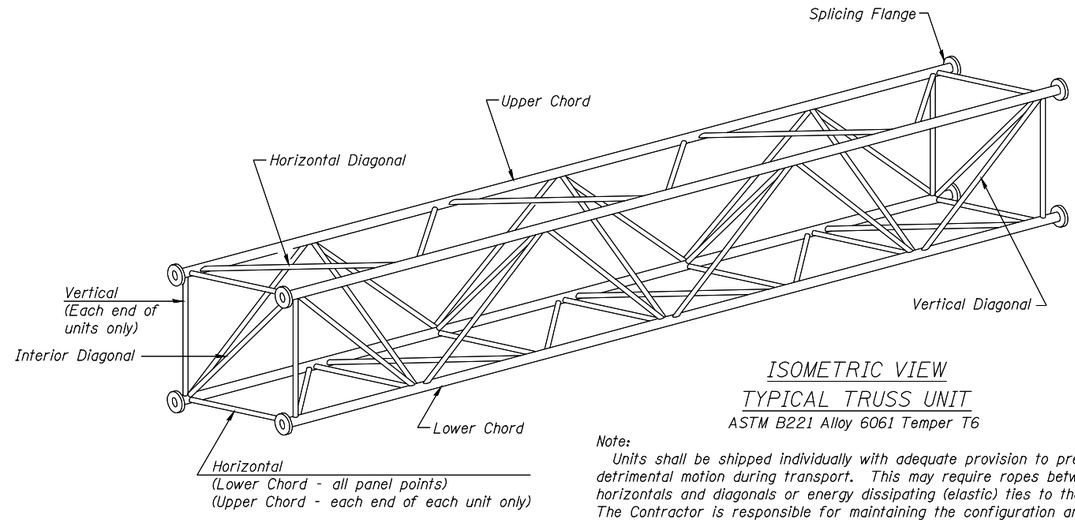

ISOMETRIC VIEW
TYPICAL TRUSS UNIT
ASTM B221 Alloy 6061 Temper T6

Note:
Units shall be shipped individually with adequate provision to prevent detrimental motion during transport. This may require ropes between horizontals and diagonals or energy dissipating (elastic) ties to the vehicle. The Contractor is responsible for maintaining the configuration and protection of the units.

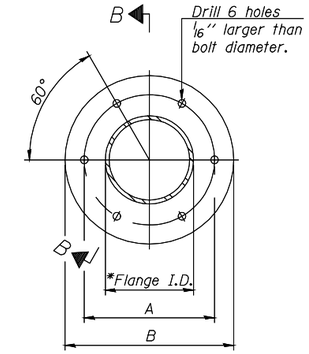

TRUSS TYPES I-A, II-A, & III-A

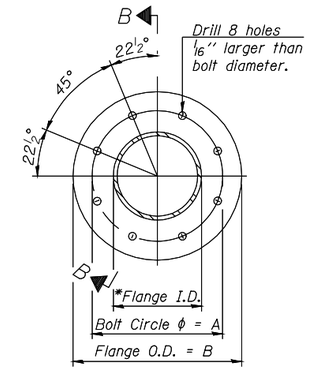

TRUSS TYPES II-A & III-A

SPLICING FLANGES
ASTM B221, Alloy 6061-T6
or ASTM B209, Alloy 6061-T651
*To fit O.D. of Chord with maximum gap of 1/16".

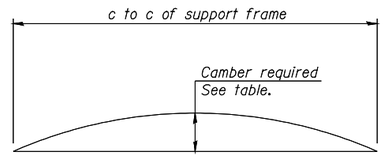

CAMBER DIAGRAM
Camber curve shown is theoretical. Actual camber attained by slope changes at splices between units.

CAMBER ATTAINMENT EXAMPLES:

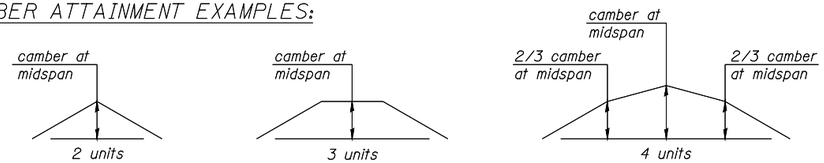

Camber shown is for fabrication only, measured with truss fully supported. (No-load condition)

NUMBER	REVISION	DATE

DESIGNED -	
CHECKED -	
DRAWN -	
CHECKED -	

- 200
EXAMINED
ENGINEER OF BRIDGE DESIGN
PASSED
ENGINEER OF BRIDGES AND STRUCTURES

OS4-A-2 I/D10B006

OVERHEAD SIGN STRUCTURES
ALUMINUM TRUSS DETAILS
FOR TRUSS TYPES I-A, II-A AND III-A

STATE OF ILLINOIS
DEPARTMENT OF TRANSPORTATION

ROUTE NO.	SECTION	COUNTY	TOTAL SHEETS	SHEET NO.
I-74 I-280	-	ROCK ISLAND		
FED. ROAD DIST. NO. 7		ILLINOIS	FED. AID PROJECT-	

SHEET NO. -
- SHEETS

Contract #

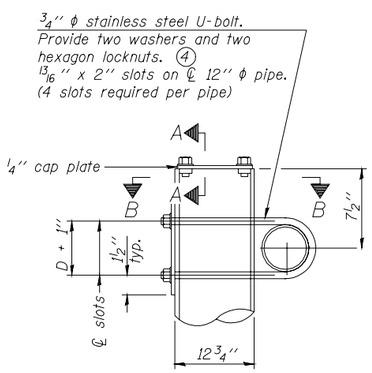

DETAIL A

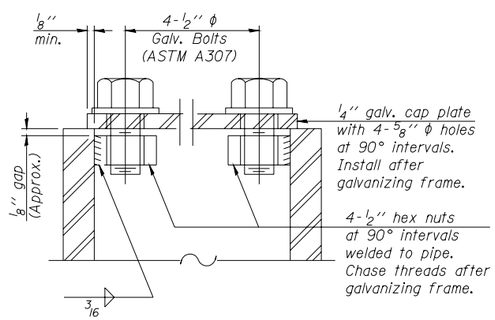

SECTION A-A

As an alternate to bolts, may use galvanized drive-fit caps installed after galvanizing frame.

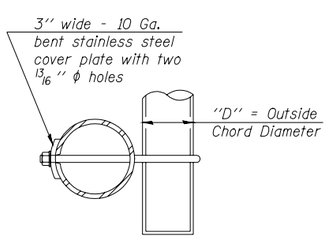

SECTION B-B

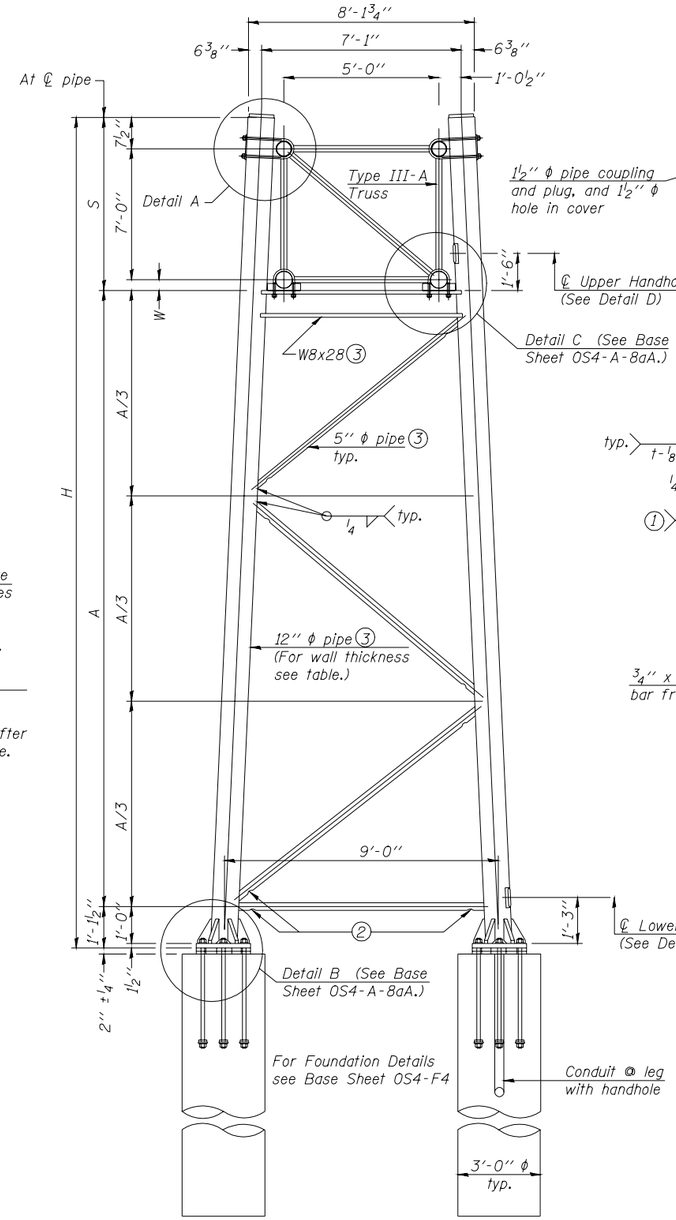

SIDE ELEVATION

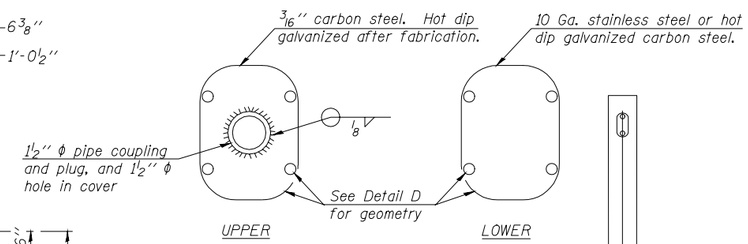

HANDHOLE COVERS

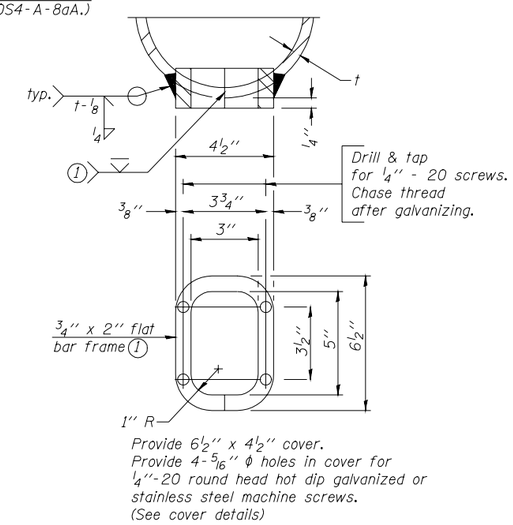

DETAIL D

Dimensions		
Truss Chord Nominal Dia.	W	S
7''	4 3/4''	8'-0 1/4''
8 1/2''	5 1/2''	8'-1''
9''	5 3/4''	8'-1 1/4''

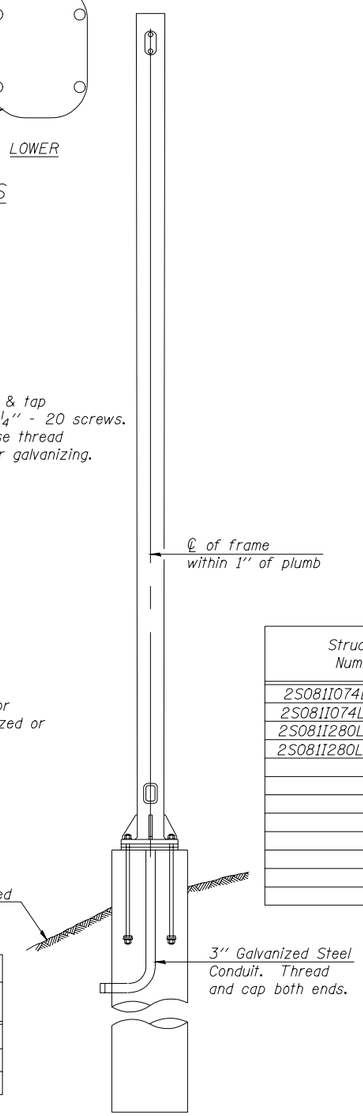

END ELEVATION

TRUSS SUPPORT DETAILS
(12'' ϕ Pipe-Type III-A Truss

Support Design Loads: See Base Sheet OS-A-1 for design and loading criteria.
Load combinations checked include deadload plus:
a) 100% wind normal to sign, 20% parallel to sign
b) 60% wind normal to sign, 30% parallel to sign

1. In lieu of fabricated handhole frame as shown, may cut from 2'' plate (rolling direction vertical). All cut faces to be ground to ANSI Roughness of 500 min or less.
2. Galvanizing vent holes of adequate size shall be provided on underside at each end of bracing pipes. Alternately, holes may be provided in wall of pipe column. All vent holes shall be drilled and de-burred, typ.
3. Steel pipe, plate, carbon steel handhole covers and rolled sections shall be hot dip galvanized after fabrication. Painting is not permitted. See Base Sheet OS-A-1.
4. See General Notes for fasteners.
5. Dimensions shown are based on selection criteria in the Sign Structures Manual. Nonstandard applications must have dimensions verified or amended as appropriate.
6. "H" based on 15'-0'' or actual sign height, whichever is greater.

* For dynamic message sign installations, provide upper and lower handholes in both legs of each support frame.

Structure Number	Station	Support Left	Support Right	Pipe Wall Thickness	H (6)	A
2S081I074L006.9	165+82		X	.33	31'-6 1/2"	22'-4 1/2"
2S081I074L006.9	165+82	X		.33	28'-4 11/16"	19'-2 3/4"
2S081I280L003.3	367+71		X	.33	33'-1 1/2"	23'-11 3/4"
2S081I280L003.3	367+71	X		.33	28'-3 7/16"	19'-1 11/16"

OVERHEAD SIGN STRUCTURES
SUPPORT FRAME FOR
TYPE III-A ALUMINUM TRUSS

NUMBER	REVISION	DATE

DESIGNED -	
CHECKED -	
DRAWN -	
CHECKED -	

- 200
EXAMINED
ENGINEER OF BRIDGE DESIGN
PASSED
ENGINEER OF BRIDGES AND STRUCTURES

OS4-A-8a 7/01/2006

STATE OF ILLINOIS
DEPARTMENT OF TRANSPORTATION

ROUTE NO.	SECTION	COUNTY	TOTAL SHEETS	SHEET NO.
I-74 I-280	-	ROCK ISLAND		
FED. ROAD DIST. NO. 7		ILLINOIS	FED. AID PROJECT-	

SHEET NO. -
- SHEETS

Contract #

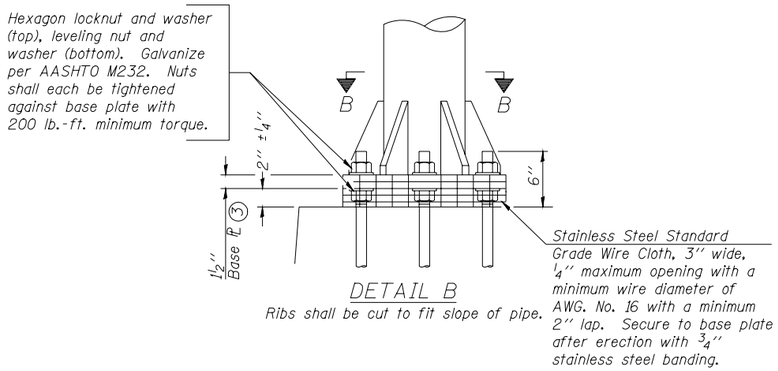

DETAIL B

Ribs shall be cut to fit slope of pipe.

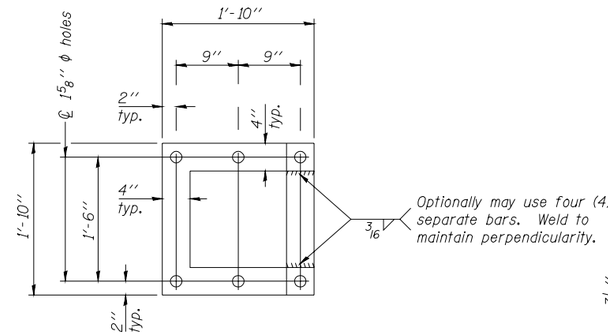

POSITIONING PLATE(S)

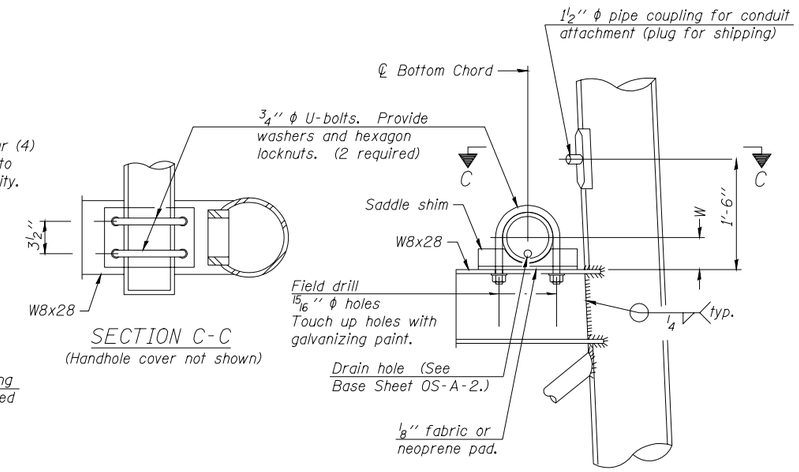

SECTION C-C

(Handhole cover not shown)

DETAIL C

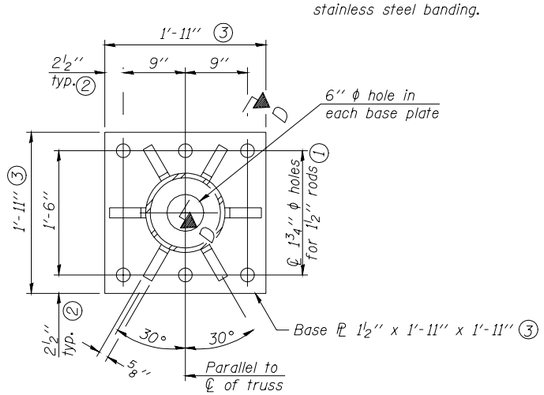

SECTION B-B

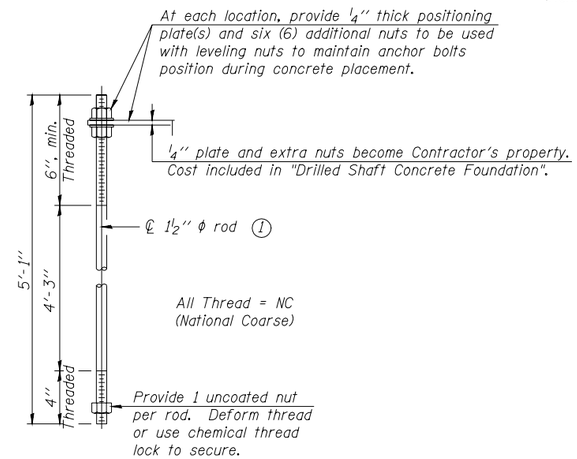

ANCHOR ROD DETAIL

Anchor rods shall conform to AASHTO M314 Grade 36 or 55 and meet Charpy V-Notch (CVN) energy of 15 lb.-ft. at 40° F. Galvanize upper 12'' per AASHTO M232. No welding shall be permitted on rods.

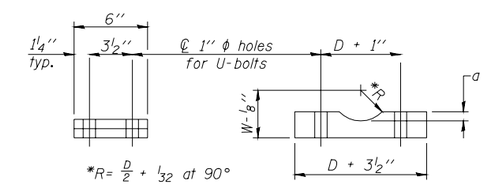

*R= D/2 + 1/32 at 90°

D = Outside Diameter of Chord.
For W, see Base Sheet OS-A-6.

Truss Chord Nominal Dia.	a
7''	1''
8 1/2''	1 1/4''
9''	1 3/8''

SADDLE SHIM DETAIL

ASTM B26 Alloy 356-F
or
ASTM B209 Alloy 6061-T651
(4 required per sign truss)

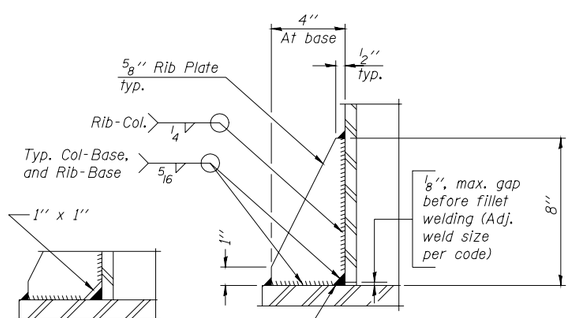

** Alternate detail if welding col. to base plate first, then snip inside corner of ribs. Terminate weld on rib 1/4'' from snip.

SECTION D-D

TYPE III-A TRUSS
12'' ϕ PIPE SUPPORT FRAME DETAILS

Notes:
For Type III-A Truss spans greater than 150 ft, and up to 160 ft.:

① 1 3/4'' ϕ rod, 2'' ϕ holes

② 2 3/4'' edge distance

③ Base ℄ 1 5/8'' x 1'-11 1/2'' x 1'-11 1/2''

OVERHEAD SIGN STRUCTURES
SUPPORT FRAME FOR
TYPE III-A ALUMINUM TRUSS

DESIGNED -	
CHECKED -	
DRAWN -	
CHECKED -	

- 200

EXAMINED

ENGINEER OF BRIDGE DESIGN

PASSED

ENGINEER OF BRIDGES AND STRUCTURES

NUMBER	REVISION	DATE

OS4-A-8dA 7/01/2006

STATE OF ILLINOIS
DEPARTMENT OF TRANSPORTATION

ROUTE NO.	SECTION	COUNTY	TOTAL SHEETS	SHEET NO.
S.B.I. F.A.		ROCK ISLAND		
FED. ROAD DIST. NO. 7		ILLINOIS	FED. AID PROJECT.	

SHEET NO.
SHEETS

(1) If walkway is required left of the DMS cabinet, a=1'-6'' and b=walkway lengths. If walkway is not required left of the DMS cabinet, b=0 and "a" is dimension from left support frame to left end of cabinet.

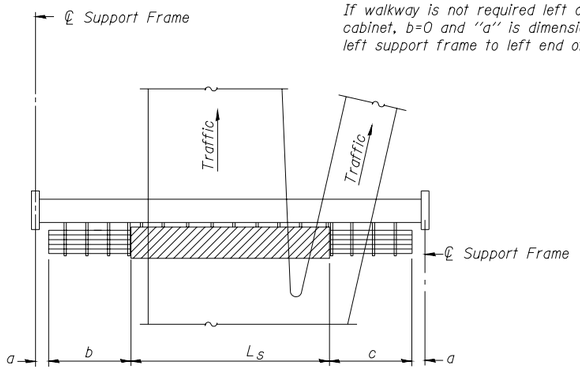

PLAN
WALKWAY AND HANDRAIL SKETCH
(Road plan beneath truss varies)

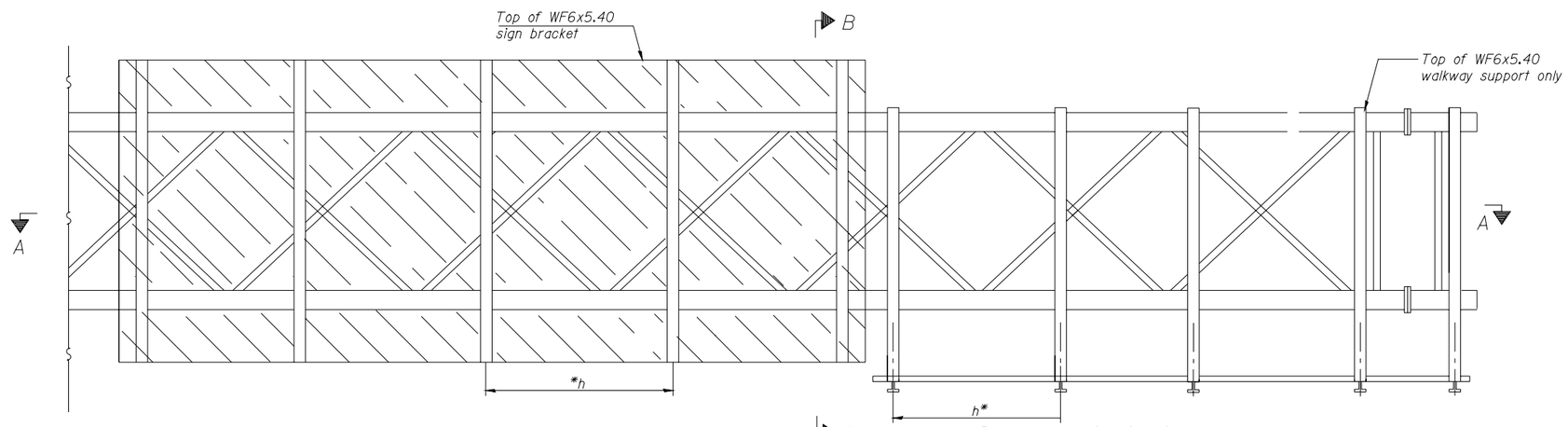

TYPICAL FRONT ELEVATION
With handrail omitted for clarity.

Bracket and grating dimensions are nominal and will vary based on actual DMS cabinet dimensions plus manufacturer's mounting devices.

BRACKET TABLE

WF6x5.40 ASTM B308, Alloy 6061-T6		
Sign Width		Number Brackets Required
Greater Than	Less Than or Equal To	
	8'-0''	2
8'-0''	14'-0''	3
14'-0''	20'-0''	4
20'-0''	26'-0''	5
26'-0''	32'-0''	6

Walkway and Truss Grating width dimensions are nominal and may vary ±½'' based on available standard widths.

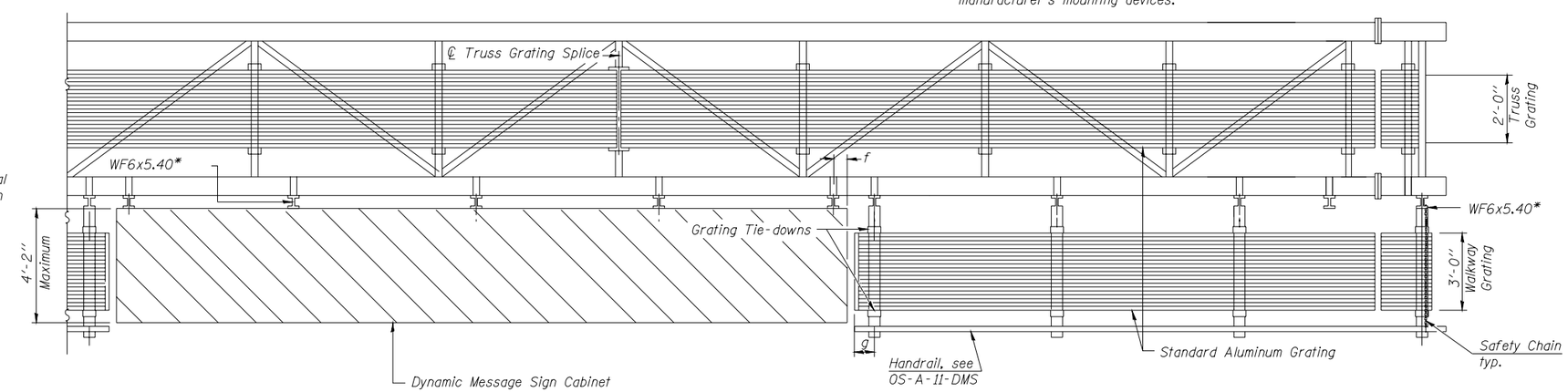

SECTION A-A

Notes:
* Space walkway brackets WF6x5.40 for efficiency and within limits shown:

f = 12'' maximum, 4'' minimum (End of sign to ℄ of nearest bracket)
g = 12'' maximum, 4'' minimum (End of walkway grating to ℄ of nearest support bracket)
h = 6'-0'' maximum (℄ to ℄ sign and/or walkway support brackets, WF6x5.40

Maximum DMS weight = 5000 lbs. 4'-2'' maximum cabinet depth includes depth of cabinet plus connection to WF6x5.40.
For Section B-B and Grating Splice Details, see Base Sheet OS-A-10-DMS.
For Handrail Splice Details, see Base Sheet OS-A-11-DMS.

Handrail and walkway shall span a minimum of three brackets between splices and/or gap joints.
Place all sign and walkway brackets as close to panel points as practical.
Grating and handrail splices placed as needed.

Truss grating to facilitate inspection shall run full length (center to center of support frames) ±12'' on overhead trusses.
Cost of truss grating is included in "Overhead Sign Structure".

Structure Number	Station	a	b	c	L_S	Walkway Grating and Handrail Lengths
2S081I074L006.9	165+82	R-26' L-4'	6.5'	6.5'	29'	13'
2S081I280L003.3	367+71	26'	6.5'	6.5'	29'	13'

NUMBER	REVISION	DATE

OVERHEAD SIGN STRUCTURES
ALTERNATE ALUMINUM WALKWAY DETAILS
FOR DMS

OS-A-9-DMS 7/01/2006

STATE OF ILLINOIS
DEPARTMENT OF TRANSPORTATION

ROUTE NO.	SECTION	COUNTY	TOTAL SHEETS	SHEET NO.
S.B.I. # F.A.		ROCK ISLAND		

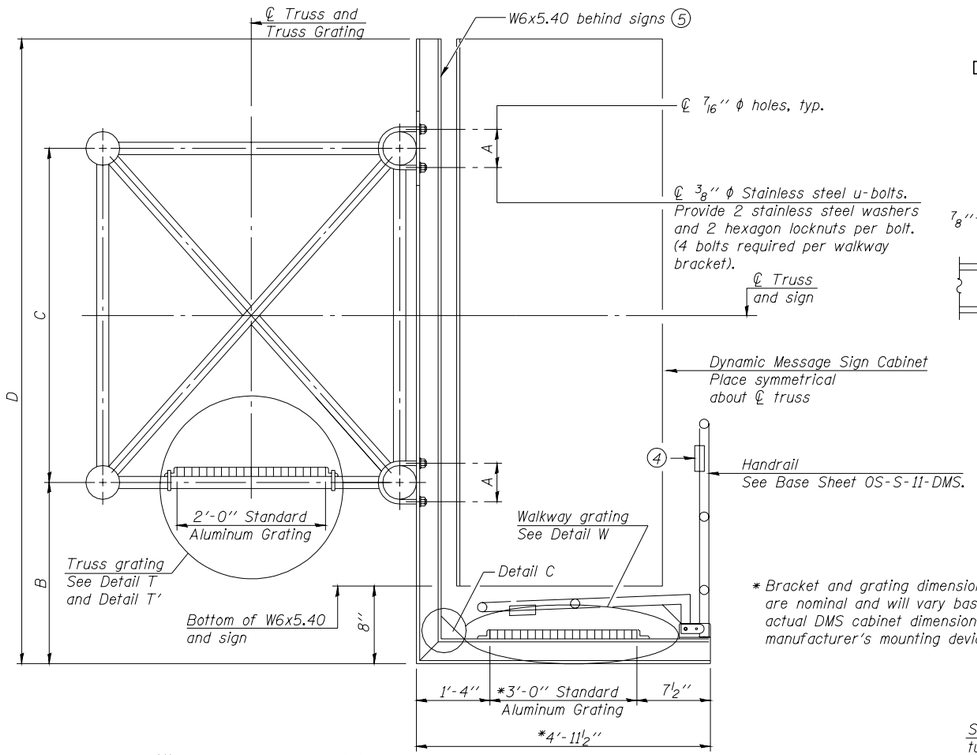

SECTION B-B

* Bracket and grating dimensions are nominal and will vary based on actual DMS cabinet dimensions plus manufacturer's mounting devices.

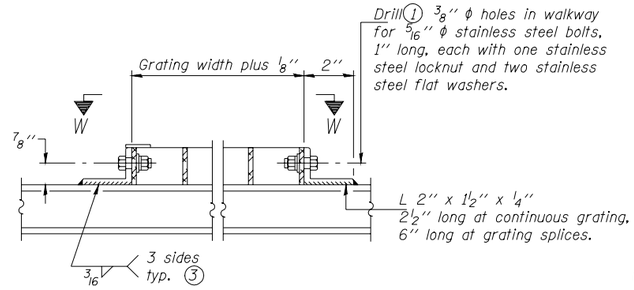

DETAIL W
(Walkway grating)

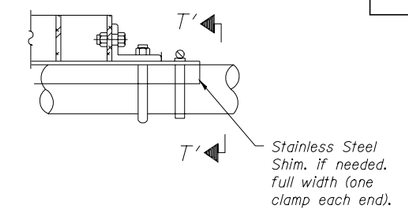

DETAIL T'
(Truss grating splice)
Details not shown same as Detail T.
Alternate materials may be used subject to the Engineer's review and approval.

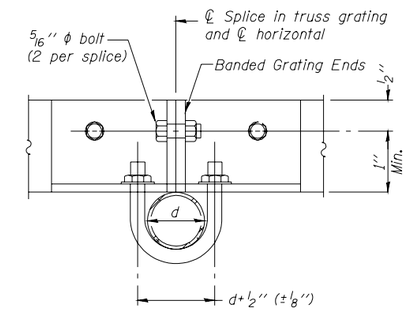

SECTION T'-T'

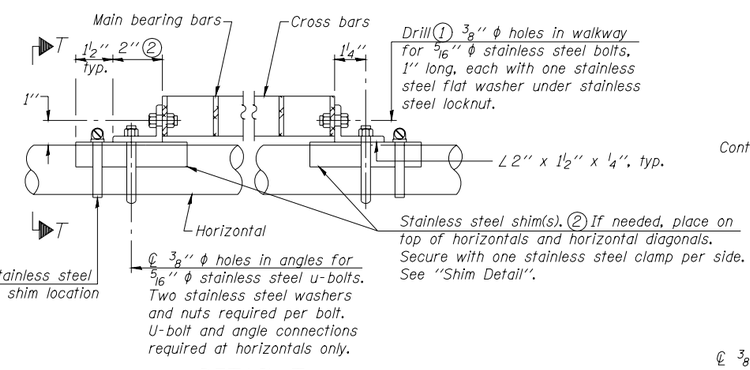

DETAIL T
(Continuous Truss grating)

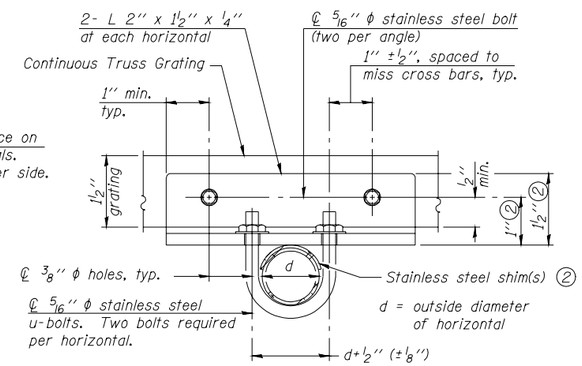

SECTION T-T

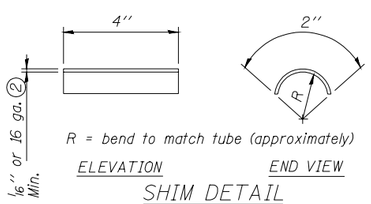

SHIM DETAIL

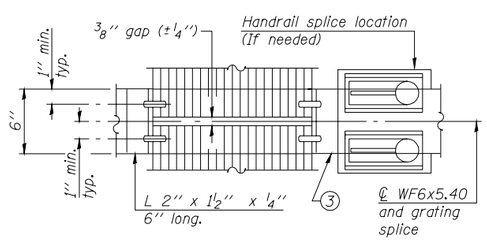

(AT WALKWAY GRATING SPLICE)

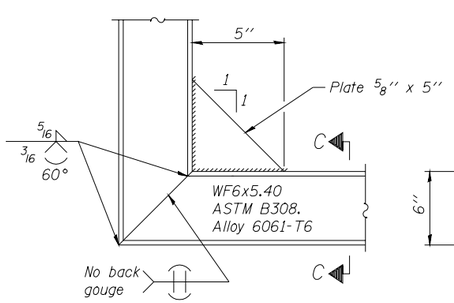

DETAIL C

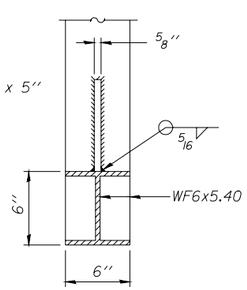

SECTION C-C

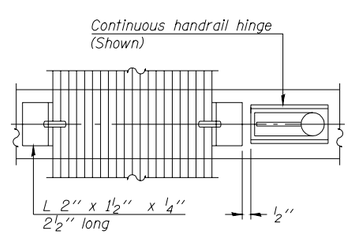

(CONTINUOUS WALKWAY GRATING)

SECTION W-W

SPECIFICATIONS FOR STANDARD ALUMINUM GRATING

Main Bearing Bars shall be 3/16" x 1½" on 1 3/16" centers and conform to ASTM B211 Alloy 6061-T6.

Cross bars shall be 3/16" x 1½" on 4" centers and conform to ASTM B221 Alloy 6063-T5 or 6061-T6.

OR

Aluminum Grating with modified "t" sections for main bearing bars shall meet the following requirements:

Main bars shall conform to ASTM B221 Alloy 6061-T6 and have a minimum section modulus equal to 0.0705 in. per bar, a depth of 1½", spaced on 1 3/16" centers.

Cross bars shall conform to ASTM B221 Alloy 6063-T5 or T-42 and spaced on 4" centers.

Structure Number	Station	A	B	C	D
2S081I074L006.9	165+82	7½"	11"	7'-0"	8'-6"
2S081I280L003.3	367+71	7½"	11"	7'-0"	8'-6"

① Drilling holes in grating may be done in shop or field, based on Contractor's preference and subject to accurate alignment.
② Stainless steel shims shall be placed as shown in Detail T if needed to compensate for alignment variations between horizontal and diagonal pipes beyond adjustment provided by angles. Thicker shims may be used subject to shims performing properly.
③ If Handrail Joint present, weld angle to WF(A-N)4 and ¼" extension bars. (See Base Sheet OS-A-11.)
④ PL ⅛" x ½" x 2" welded to handrail posts to protect locations that contact grating.
⑤ Cabinet manufacturer must design and supply hardware for connection of cabinet to WF6's. Bolts must be stainless steel or hot dip galvanized high strength per IDOT specifications.

NUMBER	REVISION	DATE

OVERHEAD SIGN STRUCTURES
ALTERNATE ALUMINUM WALKWAY DETAILS
FOR DMS

OS-A-10-DMS 7/01/2006

STATE OF ILLINOIS
DEPARTMENT OF TRANSPORTATION

ROUTE NO.	SECTION	COUNTY	TOTAL SHEETS	SHEET NO.
I-74 I-280	-	ROCK ISLAND		
FED. ROAD DIST. NO. 7		ILLINOIS	FED. AID PROJECT-	

SHEET NO. -
- SHEETS

Contract #

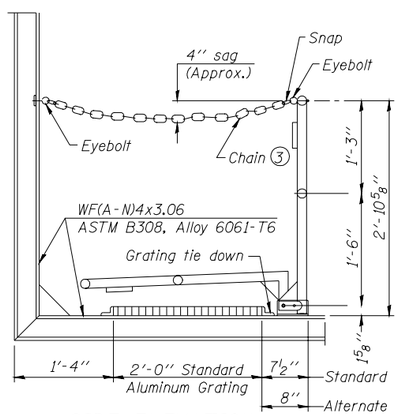

SIDE ELEVATION
(Showing safety chain w/o sign)

HANDRAIL DETAILS

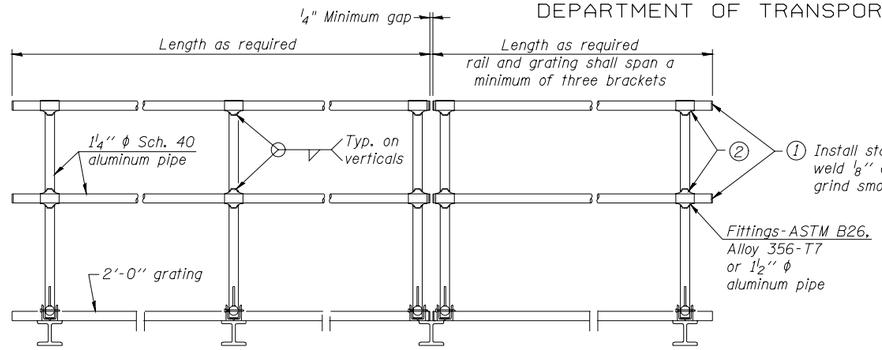

(1) Install standard force-fit end caps or weld 1/8'' end plates with 1/8'' c.f.w. and grind smooth. (All rail ends)

(2) Horizontal handrail member shall be continuous thru fitting. Provide 7/16'' ϕ hole in fitting for 3/8'' ϕ bolt. Field drill 7/16'' ϕ hole in horizontal rail member. Provide locknut and two stainless steel washers for bolt. (Use 5/16'' eyebolts in 7/16''ϕ holes on top rail at ends only.)

FRONT ELEVATION

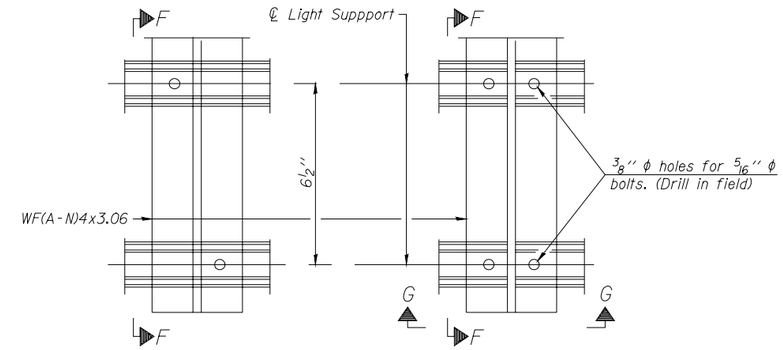

DETAIL F

DETAIL G

Handrail pipe shall be ASTM B241 or B429, Alloy 6063-T6 or Alloy 6061-T6.

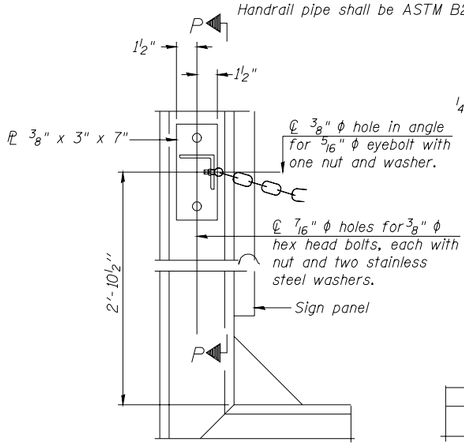

ALTERNATE SAFETY CHAIN ATTACHMENT
(With Sign Present)
Items not shown same as "Side Elevation" of "Handrail Details"

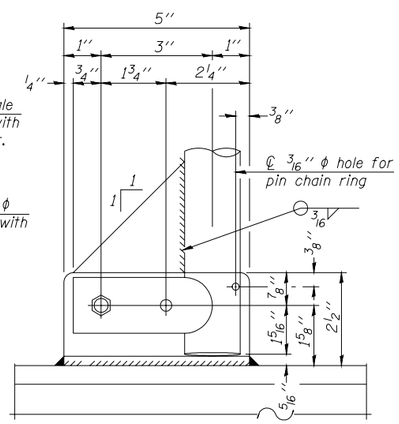

SIDE ELEVATION

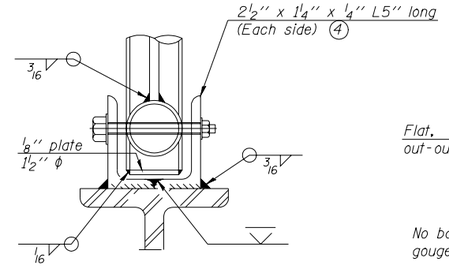

FRONT ELEVATION
See "Elevation" at right for dimensions.

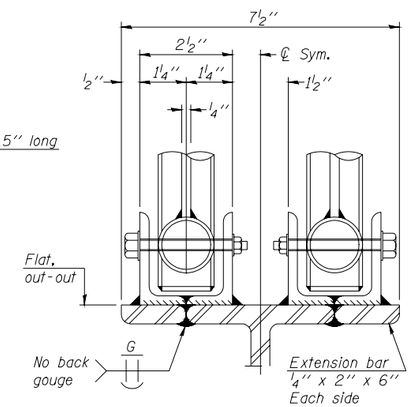

ELEVATION AT HANDRAIL JOINT (4)

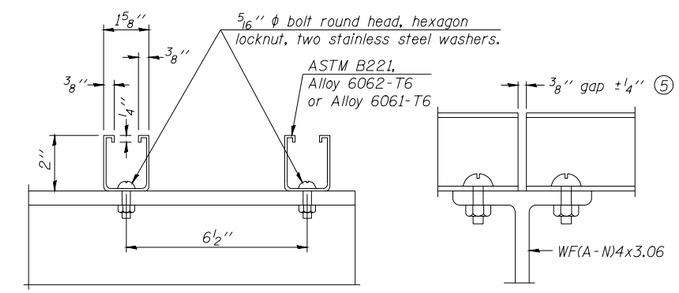

SECTION F-F

SECTION G-G

LIGHTING FIXTURE MOUNTS (IF REQUIRED)

(5) Field cut ends of light support channels shall be free of burrs or hazardous projections and coated with zinc-rich primer or equivalent.

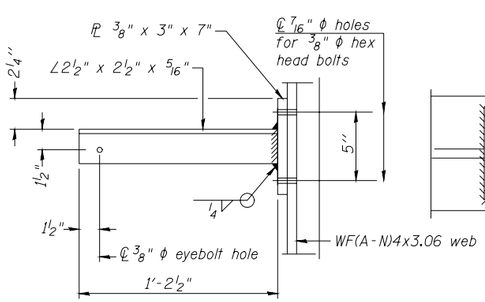

SECTION P-P

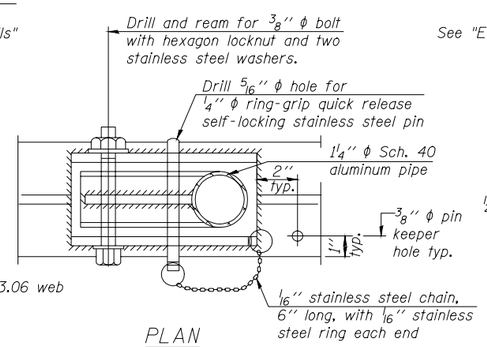

PLAN

DETAIL E HANDRAIL HINGE

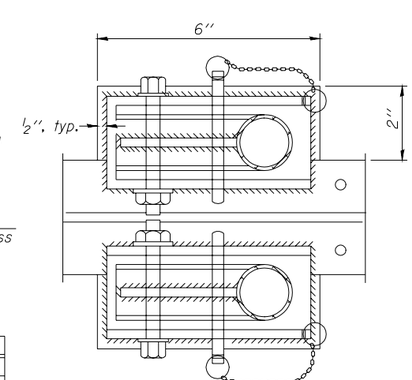

PLAN AT HANDRAIL JOINT
Details not shown same as "PLAN"

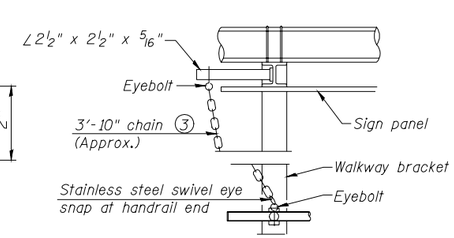

ALTERNATE SAFETY CHAIN ATTACHMENT
Details not shown similar to "Safety Chain" Details
(Walkway omitted for clarity)

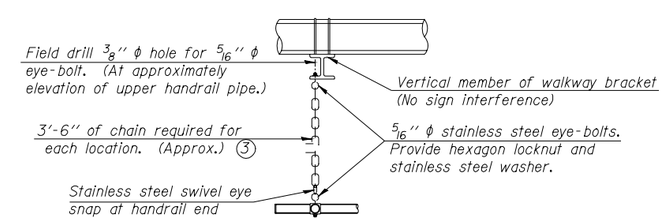

SAFETY CHAIN
One required for each end of each walkway.

(3) 3/16'' Type 304L stainless steel chain, approximately 12 links per foot.

(4) Extrusions may be used in lieu of the details shown, with approval of the Engineer.

OVERHEAD SIGN STRUCTURES
ALUMINUM HANDRAIL DETAILS

DESIGNED -	
CHECKED -	
DRAWN -	
CHECKED -	

- 200
EXAMINED
ENGINEER OF BRIDGE DESIGN
PASSED
ENGINEER OF BRIDGES AND STRUCTURES

NUMBER	REVISION	DATE

OS-A-11 7/01/2006

STATE OF ILLINOIS
DEPARTMENT OF TRANSPORTATION

ROUTE NO.	SECTION	COUNTY	TOTAL SHEETS	SHEET NO.
I-74 I-280	-	ROCK ISLAND		
FED. ROAD DIST. NO. 7		ILLINOIS	FED. AID PROJECT-	

SHEET NO. -
- SHEETS

Contract #

For anchor rod size and placement, see Support Frame Detail Sheet.

** Anchor rod shall be ground or filed to bright metal at clamp and cable connection location.*

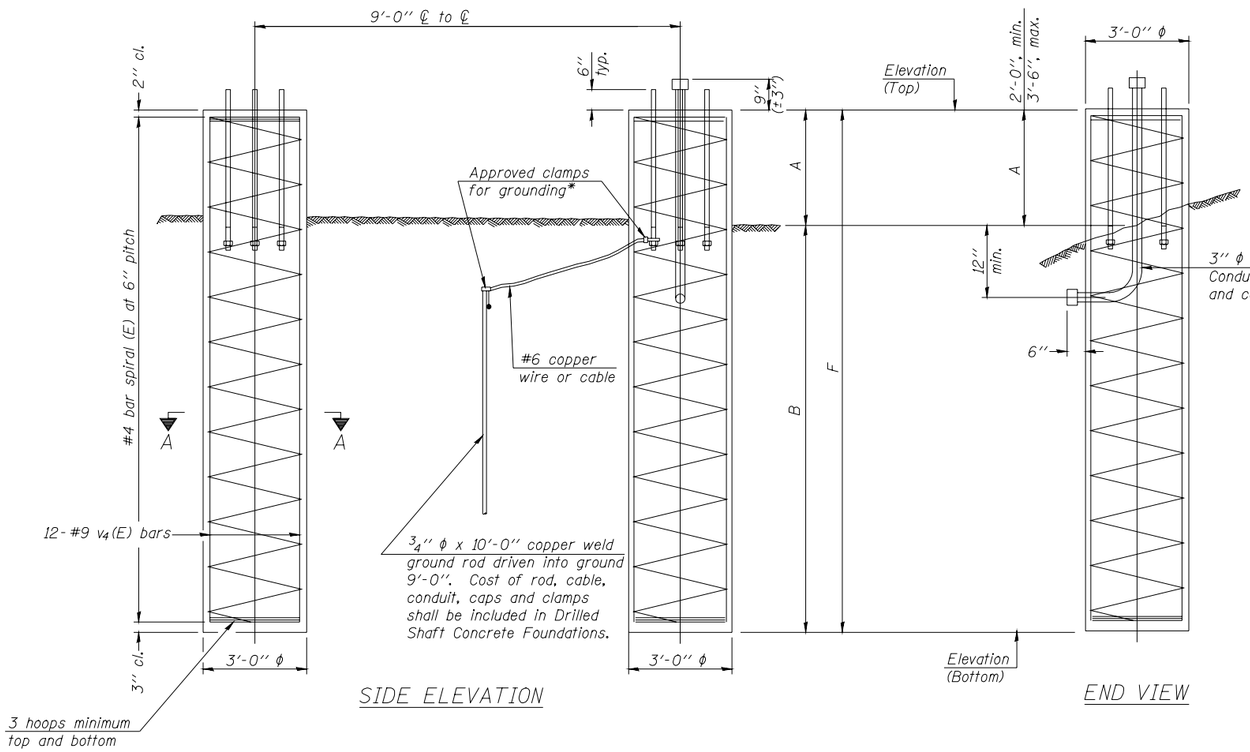

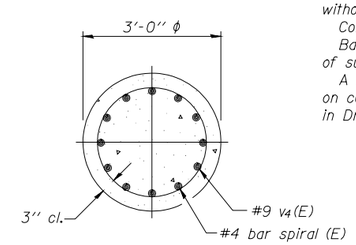

SECTION A-A

BAR LIST - EACH FOUNDATION

Bar	Number	Size	Length	Shape
v4(E)	24	#9	F less 5"	———
#4 bar spiral (E) - see Side Elevation				

NOTES:

The foundation dimensions shown are based on the presence of mostly cohesive soils with an average Unconfined Compressive Strength (Qu) of at least 1.25 tsf, which must be determined by previous soil investigations at the jobsite. When other conditions are indicated, the boring data will be included in the plans and the foundation dimensions shown will be the result of site specific designs.

If the conditions encountered are different than those indicated, the Contractor shall notify the Engineer to determine if the foundation dimensions need to be modified. If dimensions "B" or "F" are revised by more than 12" by the Contractor, "as-built" plans shall be prepared and submitted to the District Bureau of Operations for future reference.

No sonotubes or decomposable forms shall be used below the lower conduit entrance.

Permanent metal forms or other shielding may not be left in place below that elevation without the Engineer's written permission.

Concrete shall be placed monolithically, without construction joints.

Backfill shall be placed per Article 502 of Standard Specification and prior to erection of support column.

A normal surface finish followed by a Bridge Seat Sealer application will be required on concrete surfaces above the lowest elevation 6" below finished ground line. Cost included in Drilled Shaft Concrete Foundation.

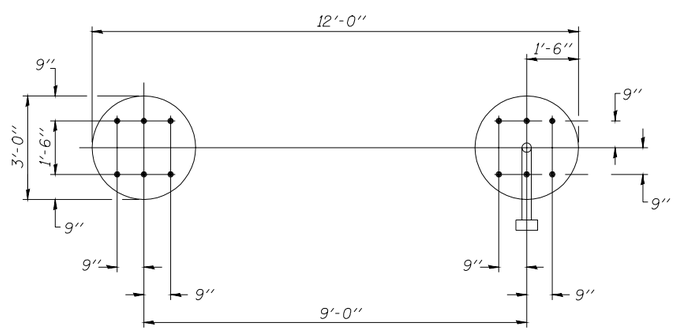

PLAN

Structure Number	Station	Left Foundation					Right Foundation					Class SI Concrete (Cu. Yds.)
		Elevation Top	Elevation Bottom	A	B	F	Elevation Top	Elevation Bottom	A	B	F	
2S081I074L006.9	165+82						637.22	617.22	2'	18'	20'	10.467
2S081I280L003.3	367+71	575.07	555.070	2	18	20	570.230	549.230	3'	18'	21'	21.457

OVERHEAD SIGN STRUCTURES
DRILLED SHAFT DETAILS

DESIGNED -	
CHECKED -	
DRAWN -	
CHECKED -	

- 200
EXAMINED
ENGINEER OF BRIDGE DESIGN
PASSED
ENGINEER OF BRIDGES AND STRUCTURES

NUMBER	REVISION	DATE

DETAILS FOR 12" ϕ SUPPORT FRAME
TYPE III-A TRUSS

OS4-F4 1-7-05

PROJECT NUMBER STP-A-000-S(330)--22-00 SHEET NUMBER U.16

STATE OF ILLINOIS
DEPARTMENT OF TRANSPORTATION

ROUTE NO.	SECTION	COUNTY	TOTAL SHEETS	SHEET NO.
I-74 I-280	-	ROCK ISLAND		
FED. ROAD DIST. NO. 7		ILLINOIS	FED. AID PROJECT-	

SHEET NO. -
- SHEETS

Contract #

* Anchor rod shall be ground or filed to bright metal at clamp and cable connection location.

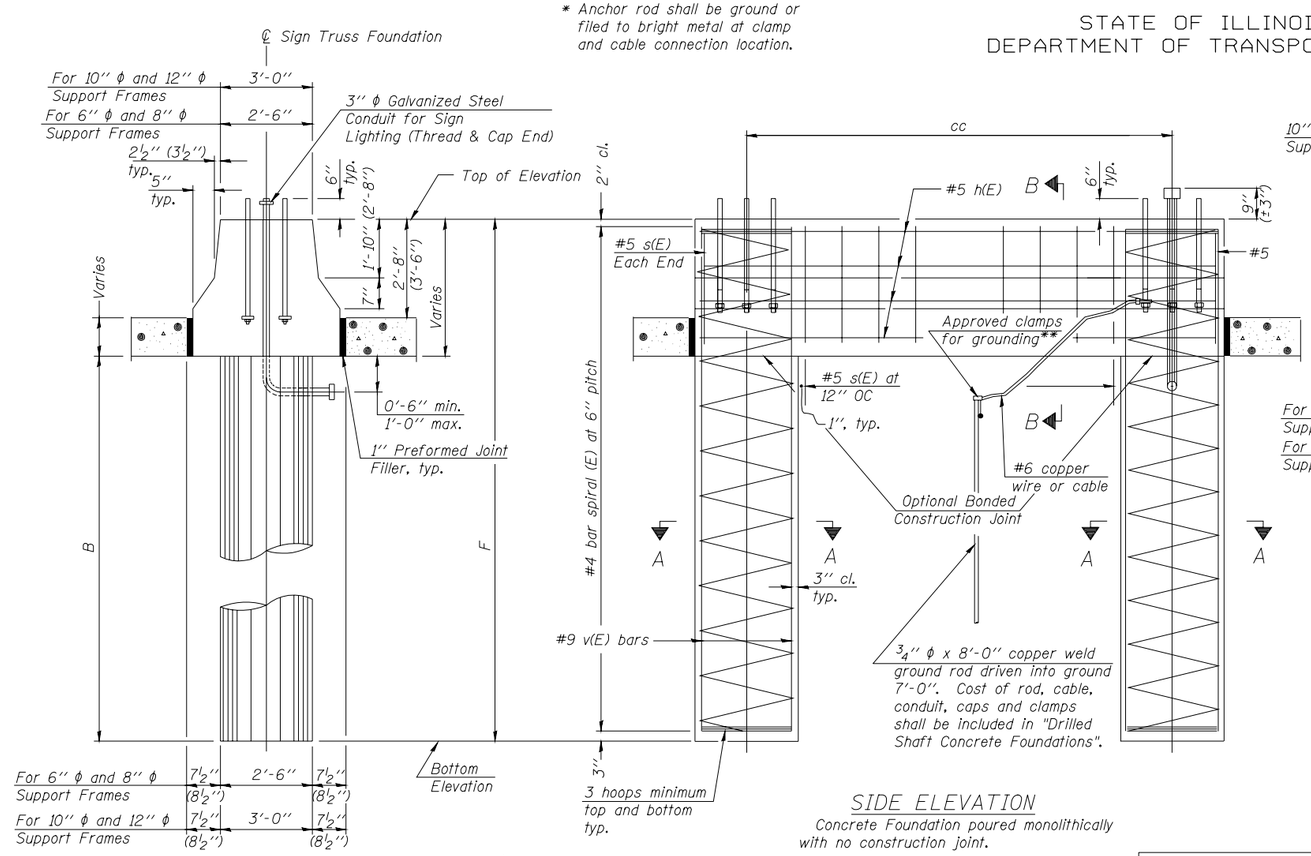

END VIEW

SIDE ELEVATION

Concrete Foundation poured monolithically with no construction joint.

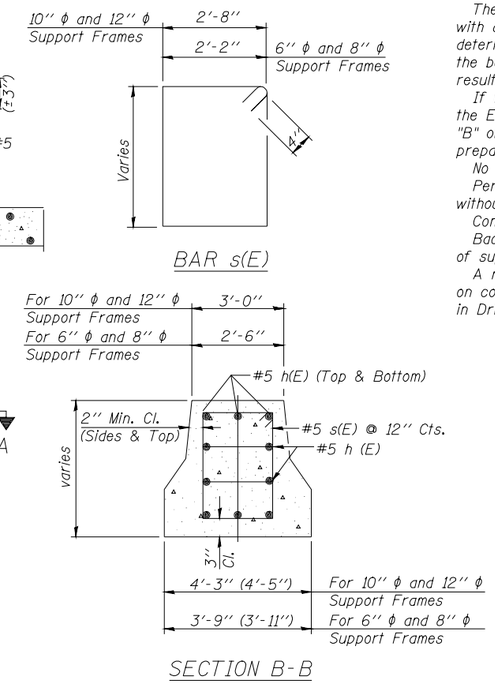

BAR s(E)

SECTION B-B

NOTES:

The foundation dimensions shown are based on the presence of mostly cohesive soils with an average Unconfined Compressive Strength (Qu) of at least 1.25 tsf, which must be determined by previous soil investigations at the jobsite. When other conditions are indicated, the boring data will be included in the plans and the foundation dimensions shown will be the result of site specific designs.

If the conditions encountered are different than those indicated, the Contractor shall notify the Engineer to determine if the foundation dimensions need to be modified. If dimensions "B" or "F" are revised by more than 12'' by the Contractor, ''as-built'' plans shall be prepared and submitted to the District Bureau of Operations for future reference.

No sonotubes or decomposable forms shall be used below the lower conduit entrance.

Permanent metal forms or other shielding may not be left in place below that elevation without the Engineer's written permission.

Concrete shall be placed monolithically, without construction joints.

Backfill shall be placed per Article 502 of Standard Specification and prior to erection of support column.

A normal surface finish followed by a Bridge Seat Sealer application will be required on concrete surfaces above the lowest elevation 6'' below finished ground line. Cost included in Drilled Shaft Concrete Foundation.

BAR LIST - EACH FOUNDATION

Bar	Number	Size	Length	Shape	
h(E)	10	#5	M less 4''	——	
s(E)	Varies	#5	Varies	□	
v(E)	16	#9	F less 0'-5''	——	6'' ϕ and 8'' ϕ Support Frame
v(E)	24	#9	F less 0'-5''	——	10'' ϕ and 12'' ϕ Support Frame
#4(E) bar spiral _ see Side Elevation					

All dimensions in parenthesis are for 42'' high barrier.

Structure Number	Station	Left Foundation				Right Foundation				Class SI Concrete (Cu. Yds.)
		Elevation Top	Elevation Bottom	B	F	Elevation Top	Elevation Bottom	B	F	
2S081I074L006.9	165+82	640.366	619.366	18'	21'					8.91

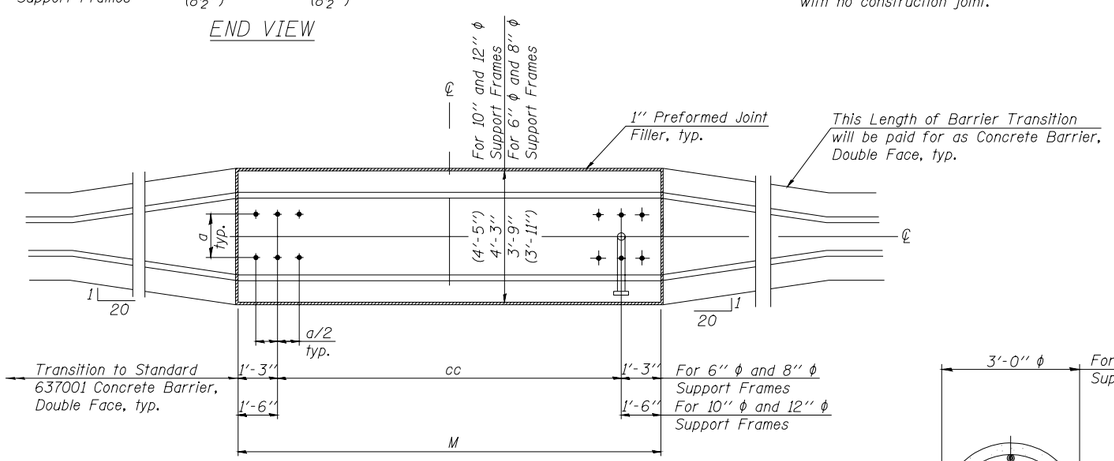

PLAN

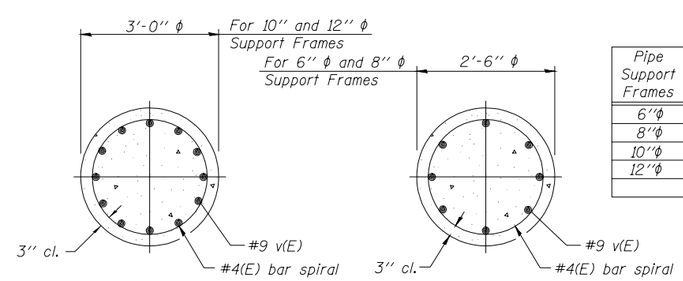

SECTION A-A

Pipe Support Frames	cc	M	a	a/2
6''ϕ	7'-0''	9'-6''	0'-11''	5½''
8''ϕ	7'-6''	10'-0''	1'-1½''	6¾''
10''ϕ	8'-3''	11'-3''	1'-3''	7½''
12''ϕ	9'-0''	12'-0''	1'-6''	9''

OVERHEAD SIGN STRUCTURES
MEDIAN SUPPORT FOUNDATION DETAILS

DESIGNED -	
CHECKED -	
DRAWN -	
CHECKED -	

- 200

EXAMINED

ENGINEER OF BRIDGE DESIGN

PASSED

ENGINEER OF BRIDGES AND STRUCTURES

OS4-MED 7/01/2006

CONTRACT NO.				
F.A. RTE.	SECTION	COUNTY	TOTAL SHEETS	SHEET NO.
STA.		TO STA.		
FED. ROAD DIST. NO.	ILLINOIS	FED. AID PROJECT		

BORING LOGS

Illinois Department of Transportation
Division of Highways
IDOT

SOIL BORING LOG

Page 1 of 1

Date 11/21/05

ROUTE I-280 for B1a,B2a but I-74 for B1-4b
DESCRIPTION 991a1280 DMS Sign Foundation, WB I-280 just west of Schaffer Creek
LOGGED BY W. Garza

SECTION
LOCATION Coal Valley Twp. - 24NW, SEC. , TWP. 17N, RNG. 1W

COUNTY Rock Island
DRILLING METHOD Hollow Stem Auger
HAMMER TYPE CME-45 Automatic

STRUCT. NO.
Station

BORING NO. B-1a
Station 367+71
Offset 22.00ft Lt CL WB
Ground Surface Elev. 99.6 ft

Surface Water Elev. N/A ft
Stream Bed Elev. ft

Groundwater Elev.:
First Encounter 82.6 ft
Upon Completion 75.1 ft
After Hrs. ft

Description	Elev.	DEPTH (ft)	BLOWS (/6")	UCS Qu (tsf)	MOIST (%)
MEDIUM brown SILTY LOAM	97.60			0.6 P	14
STIFF brown SILTY CLAY LOAM	96.10		4 4 5	1.4 S	13
STIFF brown SILTY CLAY LOAM	93.60	-5	4 5 8	1.6 P	36
STIFF brown SILTY CLAY LOAM	91.10		3 5 9	1.3 P	15
VERY STIFF dark gray SILTY CLAY LOAM	88.60	-10	5 8 11	3.0 P	21
SOFT dark gray SILTY CLAY	86.10		2 2 2	0.5 B	31
SOFT dark gray SILTY CLAY with SAND layers	83.10	-15	2 2 3	0.4 B	36
VERY LOOSE dark gray dirty SAND	80.60		1 1 1		
SOFT dark gray SANDY LOAM		-20			
SOFT dark gray SANDY LOAM (continued)	78.10		1 1 2	0.5 B	26
MEDIUM gray dirty SAND & GRAVEL	76.10		3 15 8		
LOOSE gray fine SAND	73.10	-25	4 5 4		
Wash MEDIUM gray fine SAND with GRAVEL	71.10		4 9 9		
End of Boring		-30			
		-35			
		-40			

The Unconfined Compressive Strength (UCS) Failure Mode is indicated by (B-Bulge, S-Shear, P-Penetrometer)
The SPT (N value) is the sum of the last two blow values in each sampling zone (AASHTO T206)

BBS, from 137 (Rev. 8-99)

Illinois Department of Transportation
Division of Highways
IDOT

SOIL BORING LOG

Page 1 of 1

Date 11/22/05

ROUTE I-280 for B1a,B2a but I-74 for B1-4b
DESCRIPTION 991a1280 DMS Sign Foundation, 1,000' N. of 38th Ave.
LOGGED BY T. Skromme

SECTION
LOCATION S. Moline Twp. - 9SE, SEC. , TWP. 17N, RNG. 1W

COUNTY Rock Island
DRILLING METHOD Hollow Stem Auger
HAMMER TYPE CME-45 Automatic

STRUCT. NO.
Station

BORING NO. B-1b
Station 165+82
Offset 25.00ft Lt NB CL
Ground Surface Elev. 99.3 ft

Surface Water Elev. ft
Stream Bed Elev. ft

Groundwater Elev.:
First Encounter Dry ft
Upon Completion ft
After Hrs. ft

Description	Elev.	DEPTH (ft)	BLOWS (/6")	UCS Qu (tsf)	MOIST (%)
MEDIUM brown SILTY CLAY	97.30			1.5 P	15
HARD brown SILTY CLAY LOAM	95.80		7 12 14	8.7 B	12
VERY STIFF gray SILTY CLAY TILL	93.30	-5	4 5 8	2.9 S	19
VERY STIFF dark gray weathered SHALE	90.80		5 6 11	3.3 S	25
VERY STIFF dark gray weathered SHALE	88.30	-10	4 5 7	2.9 S	18
VERY STIFF brown SANDY CLAY LOAM	85.30		5 10 14	2.7 S	20
MEDIUM light brown fine SAND	83.30	-15	6 11 13		
MEDIUM light brown fine SAND	80.80		9 13 16		
MEDIUM light brown fine SAND		-20			
MEDIUM light brown fine SAND (continued)	78.30		9 10 12		
MEDIUM light brown fine SAND	75.80		5 8 10		
MEDIUM light brown fine SAND	73.30	-25	10 16 12		
MEDIUM light brown fine SAND	70.80		6 8 10		
MEDIUM light brown fine SAND	68.30	-30	8 8 8		
End of Boring		-35			
		-40			

The Unconfined Compressive Strength (UCS) Failure Mode is indicated by (B-Bulge, S-Shear, P-Penetrometer)
The SPT (N value) is the sum of the last two blow values in each sampling zone (AASHTO T206)

BBS, from 137 (Rev. 8-99)

REVISIONS	
NAME	DATE

ILLINOIS DEPARTMENT OF TRANSPORTATION

SCALE: VERT. HORIZ.
DATE
DRAWN BY
CHECKED BY

PLOT DATE = $DATE$
FILE NAME = $FILEL$
PLOT SCALE = $SCALE$
USER NAME = $USER$

PROJECT NUMBER STP-A-000-S(330)--22-00

SHEET NUMBER U.18

CONTRACT NO.

F.A. RTE.	SECTION	COUNTY	TOTAL SHEETS	SHEET NO.
STA.		TO STA.		
FED. ROAD DIST. NO.	ILLINOIS	FED. AID PROJECT		

BORING LOGS

Illinois Department of Transportation
Division of Highways
IDOT

SOIL BORING LOG

Page 1 of 1

Date 11/21/05

ROUTE I-280 for B1a,B2a but I-74 for B1-4b DESCRIPTION 991al280 DMS Sign Foundation, WB I-280 just west of Shaffer Creek LOGGED BY W. Garza

SECTION LOCATION Coal Valley Twp. - 24NW, SEC. , TWP. 17N, RNG. 1W

COUNTY Rock Island DRILLING METHOD Hollow Stem Auger HAMMER TYPE CME-45 Automatic

STRUCT. NO.
Station

BORING NO. B-2a
Station 367+71
Offset 25.00ft Rt CL WB
Ground Surface Elev. 99.7 ft

Surface Water Elev. N/A ft
Stream Bed Elev. ft

Groundwater Elev.:
First Encounter 77.7 ft
Upon Completion 72.2 ft
After Hrs. ft

Description	Elev.	DEPTH (ft)	BLOWS (/6")	UCS Qu (tsf)	MOIST (%)
MEDIUM brown SILTY LOAM	97.70				12
VERY STIFF brown SILTY CLAY LOAM	96.20		8 9 12	3.9 B	17
VERY STIFF brown SILTY CLAY LOAM	93.70	-5	7 6 7	3.3 S	13
VERY STIFF gray SILTY LOAM	91.20		5 6 12	3.5 P	17
STIFF gray SILTY LOAM	88.70	-10	3 3 4	1.0 P	18
MEDIUM gray SILTY CLAY LOAM	86.20		3 2 3	0.6 B	21
MEDIUM dark gray SILTY CLAY LOAM	83.70	-15	1 2 3	0.5 P	43
MEDIUM dark gray SILTY CLAY LOAM	81.20		1 2 3	0.5 B	32
		-20			
MEDIUM dark gray SILTY CLAY LOAM (continued)	78.20		1 2 4	0.7 B	42
DENSE dark gray SAND & GRAVEL	76.20		23 21 26		
MEDIUM gray dirty fine SAND	73.70	-25	5 5 6		
VERY DENSE light gray SANDSTONE	71.70		100/9"		
Auger Refusal					
End of Boring		-40			

The Unconfined Compressive Strength (UCS) Failure Mode is indicated by (B-Bulge, S-Shear, P-Penetrometer)
The SPT (N value) is the sum of the last two blow values in each sampling zone (AASHTO T206)

BBS, from 137 (Rev. 8-99)

Illinois Department of Transportation
Division of Highways
IDOT

SOIL BORING LOG

Page 1 of 1

Date 11/22/05

ROUTE I-280 for B1a,B2a but I-74 for B1-4b DESCRIPTION 991al280 DMS Sign Foundation, 1,000' N. of 38th Ave. LOGGED BY T. Skromme

SECTION LOCATION S. Moline Twp. - 9SE, SEC. , TWP. 17N, RNG. 1W

COUNTY Rock Island DRILLING METHOD Hollow Stem Auger HAMMER TYPE CME-45 Automatic

STRUCT. NO.
Station

BORING NO. B-2b
Station 165+82
Offset 30.00ft Rt NB CL
Ground Surface Elev. 98.0 ft

Surface Water Elev. ft
Stream Bed Elev. ft

Groundwater Elev.:
First Encounter Dry ft
Upon Completion ft
After Hrs. ft

Description	Elev.	DEPTH (ft)	BLOWS (/6")	UCS Qu (tsf)	MOIST (%)
MEDIUM brown SILTY CLAY LOAM	95.50				17
SOFT brown LOAM	94.00		4 5 8	0.5 P	26
VERY STIFF dark gray CLAY LOAM	91.50	-5	6 6 8	3.1 B	16
VERY STIFF dark gray CLAY LOAM	89.00		3 6 9	3.5 S	19
VERY STIFF dark gray weathered SHALE	86.50	-10	6 10 11	3.1 S	23
VERY STIFF dark gray weathered SHALE	84.00		3 5 8	3.5 S	19
VERY STIFF brown SANDY LOAM	81.00	-15	6 9 16	3.1 S	25
DENSE light brown fine SAND	79.00		9 20 26		
		-20			
MEDIUM light brown fine SAND	76.50		12 14 19		
MEDIUM light brown fine SAND	74.00		7 9 15		
MEDIUM light brown fine SAND with SILT lenses	71.00	-25	10 8 14		
MEDIUM light brown SILT with fine SAND lenses	68.50		8 9 10	0.5 P	26
MEDIUM light brown fine SAND	66.50	-30	9 8 10		
End of Boring		-35			
		-40			

The Unconfined Compressive Strength (UCS) Failure Mode is indicated by (B-Bulge, S-Shear, P-Penetrometer)
The SPT (N value) is the sum of the last two blow values in each sampling zone (AASHTO T206)

BBS, from 137 (Rev. 8-99)

REVISIONS	
NAME	DATE

ILLINOIS DEPARTMENT OF TRANSPORTATION

SCALE: VERT. HORIZ.
DATE
DRAWN BY
CHECKED BY

PLOT DATE = $DATE$
FILE NAME = $FILEL$
PLOT SCALE = $SCALE$
USER NAME = $USER$

PROJECT NUMBER STP-A-000-S(330)--22-00

SHEET NUMBER U.19

CONTRACT NO.

F.A. RTE.	SECTION	COUNTY	TOTAL SHEETS	SHEET NO.
STA. 165+82.0000		TO STA. 367+71.0000		
FED. ROAD DIST. NO.	ILLINOIS	FED. AID PROJECT		

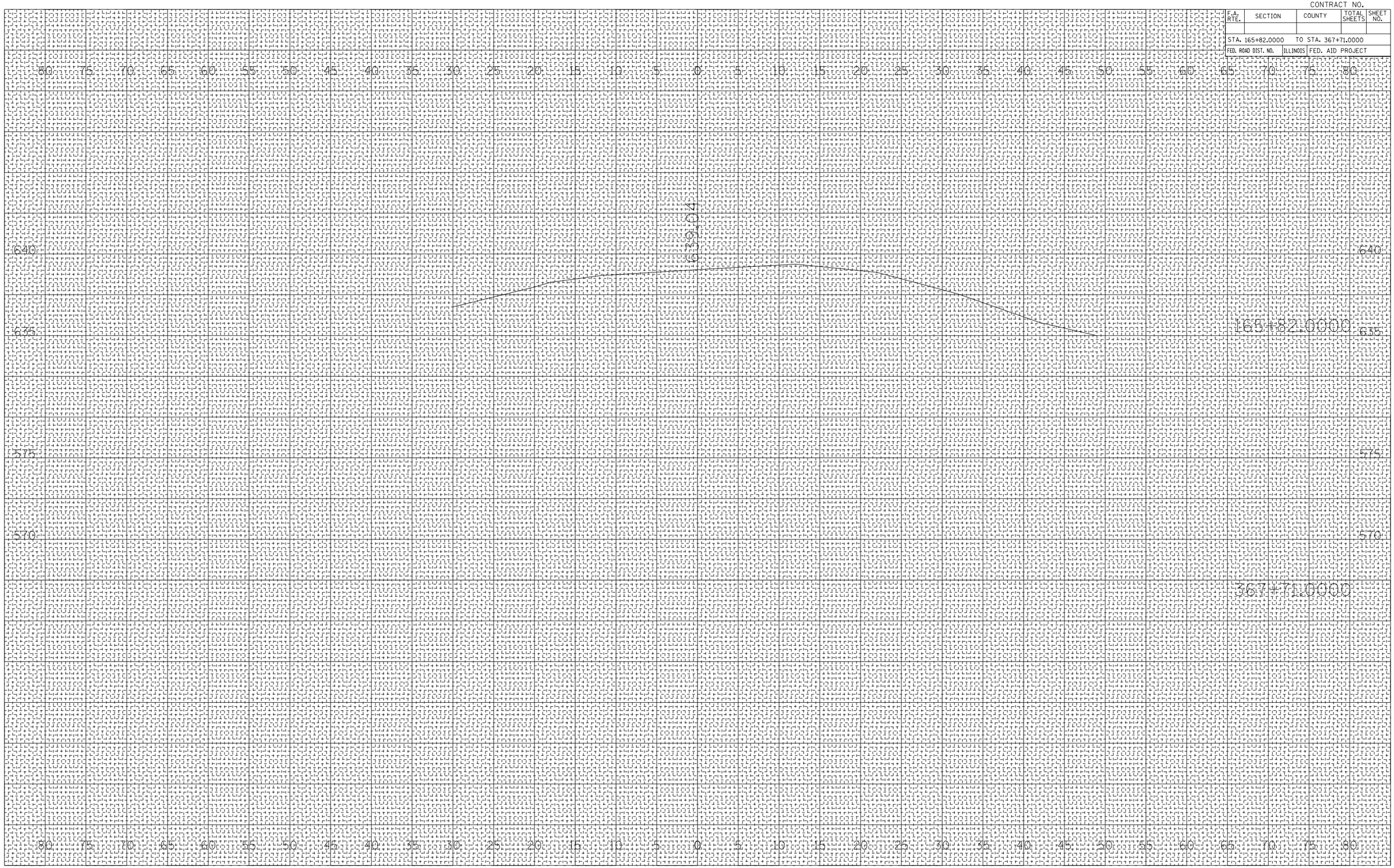

FINAL SURVEY		BY	DATE
NOTE BOOK	SURVEYED		
	PLOTTED		
	TEMPLATE		
	AREAS		
NO.	AREAS CHECKED		

ORIGINAL SURVEY		BY	DATE
NOTE BOOK	SURVEYED		
	PLOTTED		
	TEMPLATE		
	AREAS		
NO.	AREAS CHECKED		

PLOT DATE = $DATE$
FILE NAME = $FILEL$
PLOT SCALE = $SCALE$
USER NAME = $USER$

PROJECT NUMBER STP-A-000-S(330)--22-00

SHEET NUMBER U.20

ABV	ABOVE
A/C	ACCESS CONTROL
AC	ACRE
ADJ	ADJUST
AS	AERIAL SURVEYS
AGG	AGGREGATE
AH	AHEAD
APT	APARTMENT
ASPH	ASPHALT
AUX	AUXILIARY
AGS	AUXILIARY GAS VALVE (SERVICE)
AVE	AVENUE
AX	AXIS OF ROTATION
BK	BACK
B-B	BACK TO BACK
BKPL	BACKPLATE
B	BARN
BARR	BARRICADE
BGN	BEGIN
BM	BENCHMARK
BIND	BINDER
BIT	BITUMINOUS
BTM	BOTTOM
BLVD	BOULEVARD
BRK	BRICK
BBOX	BUFFALO BOX
BLDG	BUILDING
CIP	CAST IRON PIPE
CB	CATCH BASIN
C-C	CENTER TO CENTER
CL	CENTERLINE OR CLEARANCE
CL-E	CENTERLINE TO EDGE
CL-F	CENTERLINE TO FACE
CTS	CENTERS
CERT	CERTIFIED
CHSLD	CHISELED
CS	CITY STREET
CP	CLAY PIPE
CLSD	CLOSED
CLID	CLOSED LID
CT	COAT OR COURT
COMB	COMBINATION
C	COMMERCIAL BUILDING
CE	COMMERCIAL ENTRANCE
CONC	CONCRETE
CONST	CONSTRUCT
CONTD	CONTINUED
CONT	CONTINUOUS
COR	CORNER
CORR	CORRUGATED
CMP	CORRUGATED METAL PIPE
CNTY	COUNTY
CH	COUNTY HIGHWAY
CSE	COURSE
XSECT	CROSS SECTION
m^3	CUBIC METER
mm^3	CUBIC MILLIMETER
CU YD	CUBIC YARD
CULV	CULVERT
C&G	CURB & GUTTER

D	DEGREE OF CURVE
DC	DEPRESSED CURVE
DET	DETECTOR
DIA	DIAMETER
DIST	DISTRICT
DOM	DOMESTIC
DBL	DOUBLE
DSEL	DOWNSTREAM ELEVATION
DSFL	DOWNSTREAM FLOWLINE
DR	DRAINAGE OR DRIVE
DI	DRAINAGE INLET OR DROP INLET
DRV	DRIVEWAY
DCT	DUCT
EA	EACH
EB	EASTBOUND
EOP	EDGE OF PAVEMENT
E-CL	EDGE TO CENTERLINE
E-E	EDGE TO EDGE
EL	ELEVATION
ENTR	ENTRANCE
EXC	EXCAVATION
EX	EXISTING
EXPWAY	EXPRESSWAY
E	EXTERNAL DISTANCE OF HORIZONTAL CURVE
E	OFFSET DISTANCE TO VERTICAL CURVE
F-F	FACE TO FACE
FA	FEDERAL AID
FAI	FEDERAL AID INTERSTATE
FAP	FEDERAL AID PRIMARY
FAS	FEDERAL AID SECONDARY
FAUS	FEDERAL AID URBAN SECONDARY
FP	FENCE POST
FE	FIELD ENTRANCE
FH	FIRE HYDRANT
FL	FLOW LINE
FB	FOOT BRIDGE
FDN	FOUNDATION
FR	FRAME
F&G	FRAME & GRATE
FRWAY	FREEWAY
GAL	GALLON
GALV	GALVANIZED
G	GARAGE
GM	GAS METER
GV	GAS VALVE
GRAN	GRANULAR
GR	GRATE
GRVL	GRAVEL
GND	GROUND
GUT	GUTTER
GP	GUY POLE
GW	GUY WIRE
HH	HANDHOLE
HATCH	HATCHING
HD	HEAD
HDW	HEADWALL
HDUTY	HEAVY DUTY
ha	HECTARE
HWY	HIGHWAY
HORIZ	HORIZONTAL
HSE	HOUSE
IL	ILLINOIS
IMP	IMPROVEMENT
IN DIA	INCH DIAMETER
INL	INLET

INST	INSTALLATION
IDS	INTERSECTION DESIGN STUDY
INV	INVERT
IP	IRON PIPE
IR	IRON ROD
JT	JOINT
kg	KILOGRAM
km	KILOMETER
LS	LANDSCAPING
LN	LANE
LT	LEFT
LP	LIGHT POLE
LGT	LIGHTING
LF	LINEAL FEET OR LINEAR FEET
L	LITER OR CURVE LENGTH
LC	LONG CHORD
LNG	LONGITUDINAL
L SUM	LUMP SUM
MACH	MACHINE
MB	MAIL BOX
MH	MANHOLE
MATL	MATERIAL
MED	MEDIAN
m	METER
METH	METHOD
M	MID-ORDINATE
mm	MILLIMETER
mm DIA	MILLIMETER DIAMETER
MIX	MIXTURE
MBH	MOBILE HOME
MOD	MODIFIED
MFT	MOTOR FUEL TAX
N & BC	NAIL & BOTTLE CAP
N & C	NAIL & CAP
N & W	NAIL & WASHER
NOAA	NATIONAL OCEANIC ATMOSPHERIC ADMINISTRATION
NC	NORMAL CROWN
NB	NORTHBOUND
NE	NORTHEAST
NW	NORTHWEST
OLID	OPEN LID
PAT	PATTERN
PVD	PAVED
PVMT	PAVEMENT
PM	PAVEMENT MARKING
PED	PEDESTAL
PNT	POINT
PC	POINT OF CURVATURE
PI	POINT OF INTERSECTION OF HORIZONTAL CURVE
PRC	POINT OF REVERSE CURVE
PT	POINT OF TANGENCY
POT	POINT ON TANGENT
POLYETH	POLYETHYLENE
PCC	PORTLAND CEMENT CONCRETE
PP	POWER POLE OR PRINCIPAL POINT
PRM	PRIME
PE	PRIVATE ENTRANCE
PROF	PROFILE
PGL	PROFILE GRADELINE
PROJ	PROJECT
P.C.	PROPERTY CORNER
PL	PROPERTY LINE
PR	PROPOSED
R	RADIUS

RR	RAILROAD
RRS	RAILROAD SPIKE
RPS	REFERENCE POINT STAKE
REF	REFLECTIVE
RCCP	REINFORCED CONCRETE CULVERT PIPE
REINF	REINFORCEMENT
REM	REMOVAL
RC	REMOVE CROWN
REP	REPLACEMENT
REST	RESTAURANT
RESURF	RESURFACING
RET	RETAINING
RT	RIGHT
ROW	RIGHT-OF-WAY
RD	ROAD
RDWY	ROADWAY
RTE	ROUTE
SAN	SANITARY
SANS	SANITARY SEWER
SEC	SECTION
SEED	SEEDING
SHAP	SHAPING
S	SHED
SH	SHEET
SHLD	SHOULDER
SW	SIDEWALK OR SOUTHWEST
SIG	SIGNAL
SOD	SODDING
SM	SOLID MEDIAN
SB	SOUTHBOUND
SE	SOUTHEAST
SPL	SPECIAL
SD	SPECIAL DITCH
SQ FT	SQUARE FEET
m^2	SQUARE METER
mm^2	SQUARE MILLIMETER
SQ YD	SQUARE YARD
STB	STABILIZED
STD	STANDARD
SBI	STATE BOND ISSUE
SR	STATE ROUTE
STA	STATION
SPBGR	STEEL PLATE BEAM GUARDRAIL
SS	STORM SEWER
STY	STORY
ST	STREET
STR	STRUCTURE
e	SUPERELEVATION RATE
S.E. RUN.	SUPERELEVATION RUNOFF LENGTH
SURF	SURFACE
SMK	SURVEY MARKER

T	TANGENT DISTANCE
T.R.	TANGENT RUNOUT DISTANCE
TEL	TELEPHONE
TB	TELEPHONE BOX
TP	TELEPHONE POLE
TEMP	TEMPORARY
TBM	TEMPORARY BENCH MARK
TD	TILE DRAIN
TBE	TO BE EXTENDED
TBR	TO BE REMOVED
TBS	TO BE SAVED
TWP	TOWNSHIP
TR	TOWNSHIP ROAD
TS	TRAFFIC SIGNAL
TSCB	TRAFFIC SIGNAL CONTROL BOX
TSC	TRAFFIC SYSTEMS CENTER
TRVS	TRANSVERSE
TRVL	TRAVEL
TRN	TURN
TY	TYPE
T-A	TYPE A
TYP	TYPICAL
UNDGND	UNDERGROUND
USGS	U.S. GEOLOGICAL SURVEY
USEL	UPSTREAM ELEVATION
USFL	UPSTREAM FLOWLINE
UTIL	UTILITY
VBOX	VALVE BOX
VV	VALVE VAULT
VLT	VAULT
VEH	VEHICLE
VP	VENT PIPE
VERT	VERTICAL
VC	VERTICAL CURVE
VPC	VERTICAL POINT OF CURVATURE
VPI	VERTICAL POINT OF INTERSECTION
VPT	VERTICAL POINT OF TANGENCY
WM	WATER METER
WV	WATER VALVE
WMAIN	WATER MAIN
WB	WESTBOUND
WILDFL	WILDFLOWERS
W	WITH
WO	WITHOUT

STANDARD SYMBOLS, ABBREVIATIONS AND PATTERNS
(Sheet 1 of 8)

STANDARD 000001–04

ADJUSTMENT ITEMS

	EX	PR
Structure To Be Adjusted		ADJ
Structure To Be Cleaned		C
Structure To Be Filled		F
Structure To Be Removed		R
Structure To Be Reconstructed		REC
Frame and Grate To Be Adjusted		A
Frame and Lid To Be Adjusted		A
Domestic Service Box To Be Adjusted		A
Valve Vault To Be Adjusted		A
Special Adjustment		SP
Item To Be Abandoned		AB
Item To Be Moved		M
Item To Be Relocated		REL
Pavement Removal and Replacement		

ALIGNMENT ITEMS

	EX	PR
Baseline		
Centerline		
Centerline Break Circle		
Baseline Symbol	BL	BL
Centerline Symbol	℄	℄
PI Indicator		
Point Indicator		
Horiz Curve Data	CURVE P.I. STA= Δ= R= T= L= E= e= T.R.= S.E. RUN= P.C. STA= P.T. STA=	CURVE P.I. STA= Δ= R= T= L= E= e= T.R.= S.E. RUN= P.C. STA= P.T. STA=

BOUNDARIES ITEMS

	EX	PR
Dashed Property Line		
Solid Property/Lot Line		
Section/Grant Line		
County/Township Line		
State Line		
Iron Pipe Found		
Iron Pipe Set		
Survey Marker		
Property Line Symbol	PL	
Same Ownership Symbol		
Northwest Quarter Corner		
Section Corner		
Southeast Quarter Corner		

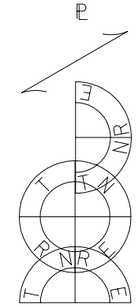

CONTOUR ITEMS

	EX	PR
Approx. Index Line		
Approx. Intermediate Line		
Index Contour		
Intermediate Contour		
Slope Limit Line		

DRAINAGE ITEMS

	EX	PR
Culvert Line		
Ditch Profile Line		
Grading & Shaping Ditches		
Drainage Boundary Line		
Paved Ditch		
Aggregate Ditch		
Flowline	FL	FL
Ditch Check		
Headwall		
Inlet		
Manhole		
Summit		
Roadway Ditch Flow		
Swale		
Catch Basin		
Culvert End Section		
Water Surface Indicator		
Riprap		

STANDARD SYMBOLS, ABBREVIATIONS AND PATTERNS
(Sheet 2 of 8)

STANDARD 000001–04

EROSION & SEDIMENT CONTROL ITEMS

	EX	PR
Cleaning & Grading Limits		
Dike		
Erosion Control Fence		
Perimeter Erosion Barrier		
Temporary Fence		
Ditch Check Temporary		
Ditch Check Permanent		
Inlet & Pipe Protection		
Sediment Basin		
Erosion Control Blanket		
Fabric Formed Concrete Revetment Mat		
Turf Reinforcement Mat		
Mulch Temporary		
Mulch Method 1		
Mulch Method 2 Stabilized		
Mulch Method 3 Hydraulic		

EXISTING IMPROVEMENT ITEMS

	EX	PR
Noise Attn./Levee		
Fence		
Base of Levee		
Mailbox		
Pay Telephone		
Advertising Sign		

LANDSCAPING ITEMS

	EX	PR
Contour Mounding Line		
Shrubs		
Mowline		
Perennial Plants		
Seeding Class 2		
Seeding Class 2A		
Seeding Class 3		
Seeding Class 4		
Seeding Class 4 & 5 Combined		
Seeding Class 5		
Seeding Class 7		

EXISTING LANDSCAPING ITEMS (cont.)

	EX	PR
Seedlings Type 1		
Seedlings Type 2		
Sodding		
Mowstake w/Sign		
Tree Trunk Protection		
Evergreen Tree	E	
Shade Tree	E	

LIGHTING

	EX	PR
Cable In Duct w/o Ground		
Conduit w/Ground		
Electrical Aerial Cable	A	A
Electrical Buried Cable	L	L
Controller		
Underpass Luminaire		
Power Pole		
Pull Point	P	P

STANDARD SYMBOLS, ABBREVIATIONS AND PATTERNS
(Sheet 3 of 8)

STANDARD 000001–04

LIGHTING (cont.)

	EX	PR
Handhole		
Heavy Duty Handhole		
Junction Box		
Light Unit Comb.		
Electrical Ground		
Traffic Flow Arrow		
High Mast Pole		
Light Unit-1		

PAVEMENT (MISC.)

	EX	PR
Keyed Long. Joint		
Keyed Long. Joint w/Tie Bars		
Sawed Long. Joint w/Tie Bars		
Bituminous Shoulder		
Bituminous Taper		
Stabilized Driveway		
Widening		

PAVEMENT MARKINGS

	EX	PR
RR Crossing		
Raised Marker Amber 1 Way		
Raised Marker Amber 2 Way		
Raised Marker Crystal 1 Way		
Two Way Turn Left		
Shoulder Diag. Patern		
Skip-Dash White		
Skip-Dash Yellow		
Stop Line		
Solid Line		
Double Centerline		
Dotted Lines		
CL 2Ln 2Way RRPM 12.2 m (40') o.c.		
CL 2Ln 2Way RRPM 24.4 m (80') o.c.		
CL Multilane Div. RRPM 12.2 m (40') o.c.		
CL Multilane Div. RRPM 24.4 m (80') o.c.		
CL Multilane Div. Dbl. RRPM 24.4 m (80') o.c.		
CL Multilane Undiv.		
Two Way Turn Left Line		

STANDARD SYMBOLS, ABBREVIATIONS AND PATTERNS
(Sheet 4 of 8)

STANDARD 000001–04

PAVEMENT MARKINGS (cont.)

	EX	PR
Urban Combination Left Only		
Urban Combination Right Only		
Urban Left Turn Arrow		
Urban Right Turn Arrow		
Urban Left Turn Only		
Urban Right Turn Only		
Urban Thru Only		
Rural Combination Left Only		
Rural Combination Right Only		
Rural Left Turn Arrow		
Rural Right Turn Arrow		
Rural Left Turn Only		
Rural Right Turn Only		
Rural Thru Only		

RAILROAD ITEMS

	EX	PR
Abandoned Railroad		
Railroad		
Railroad Point		
Control Box		
Crossing Gate		
Flashing Signal		
Railroad Cant. Mast Arm		
Crossbuck		

REMOVAL ITEMS

	EX	PR
Removal Tic		
Bituminous Removal		
Hatch Pattern		

RIGHT OF WAY ITEMS

	EX	PR
Future ROW Corner Monument		
ROW Marker		
ROW Line		
Easement		
Temporary Easement		

STANDARD SYMBOLS, ABBREVIATIONS AND PATTERNS
(Sheet 5 of 8)

STANDARD 000001–04

ROADWAY PLAN ITEMS

	EX	PR
Edge of Pavement		
Bit Shoulders, Medians and C&G Line		
Aggregate Shoulder		
Sidewalks, Driveways		
Guardrail		
Guardrail Post		
Traffic Sign		
Corrugated Median		

ROADWAY PROFILES

	EX	PR
Profile Line		
P.I. Indicator		
Point Indicator		
Earthworks Balance Point		
Begin Point		
Vert. Curve Data	VPI = ELEV = L = E =	VPI = ELEV = L = E =

SIGNING ITEMS

	EX	PR
Barricade Type 1 or 2		
Barricade Type II		

SIGNING ITEMS (cont.)

	EX	PR
Barricade Type III		
Barricade With Edge Line		
Flashing Light Sign		
Panels I		
Panels II		
Sign Flag		
Direction of Traffic		
Detour M4-10L-(0)		DETOUR
Detour M4-10R-(0)		DETOUR
One Way Left R6-1L		ONE WAY
One Way Right R6-1R		ONE WAY
One Way Arrow Lrg. W1-6-(0)		
Two Way Arrow Large W1-7-(0)		
Reverse Left W1-4L		
Reverse Right W1-4R		
Two Way Traffic Sign W6-3		

SIGNING ITEMS (cont.)

	EX	PR
Detour Ahead W20-2		DETOUR AHEAD
Left Lane Closed Ahead		LEFT LANE CLOSED AHEAD
Road Closed Ahead W20-R-(0)		RIGHT LANE CLOSED AHEAD
Road Closed Ahead W20-3-(0)		ROAD CLOSED AHEAD
Road Construction Ahead W20-1-(0)		ROAD CONSTRUCTION AHEAD
Single Lane Ahead		SINGLE LANE AHEAD
Transition Left W4-2L		
Transition Right W4-2R		

STANDARD SYMBOLS, ABBREVIATIONS AND PATTERNS
(Sheet 6 of 8)

STANDARD 000001–04

SIGNING ITEMS (cont.)

	EX	PR
Left Turn Lane R3-I100L		LEFT TURN LANE
Keep Left R4-7AL		KEEP LEFT
Keep Left R4-7BL		KEEP LEFT
Keep Right R4-7AR		KEEP RIGHT
Keep Right R4-7BR		KEEP RIGHT
Stop Here On Red R10-6-AL		STOP HERE ON RED
Stop Here On Red R10-6-AR		STOP HERE ON RED
No Left Turn R3-2		
No Right Turn R3-1		
Road Closed R11-2		ROAD CLOSED
Road Closed Thru Traffic R11-2		ROAD CLOSED TO THRU TRAFFIC

TRAFFIC SHEET ITEMS

	EX	PR
Cable Number	2	2
Left Turn Green	G	G
Left Turn Yellow	Y	Y
Signal Backplate		
Signal Section 200 mm (8")		
Signal Section 300 mm (12")		
Walk/Don't Walk Letters	DW W	DW W
Walk/Don't Walk Symbols		

TRAFFIC SIGNAL ITEMS

	EX	PR
Galv. Steel Conduit		
Underground Cable		
Detector Loop Line		
Detector Loop Large		
Detector Loop Small		
Detector Loop Quadrapole		
Detector Raceway	"E"	
Aluminum Mast Arm		
Steel Mast Arm		
Veh. Detector Magnetic		

TRAFFIC SIGNAL ITEMS (cont.)

	EX	PR
Conduit Splice		
Coutroller		
Gulfbox Junction		
Wood Pole		
Temp. Signal Head		
Handhole		
Heavy Duty Handhole	H	H
Junction Box	J	J
Ped. Pushbutton Detector		
Ped. Signal Head		
Power Pole Service		
Priority Veh. Detector		
Signal Head		
Signal Head w/Backplate		
Signal Post		

UNDERGROUND UTILITY ITEMS

	EX	PR
Cable TV	CTV CTV	CTV CTV
Electric Cable	E E	E E
Fiber Optic	FO FO	FO FO
Gas Pipe	G	G
Oil Pipe	O	O
Pipe Underdrain		

STANDARD SYMBOLS, ABBREVIATIONS AND PATTERNS
(Sheet 7 of 8)

STANDARD 000001–04

UNDERGROUND UTILITY ITEMS (cont.)

	EX	PR
Sanitary Sewer		
Storm Sewer		
Telephone Cable	T	T
Water Pipe	W	W

UTILITIES ITEMS

	EX	PR
Controller		
Double Handhole		
Fire Hydrant		
Handhole		
Heavy Duty Handhole	H	H
Junction Box		
Light Pole		
Manhole		
Power Pole		
Splice Box Above Ground		
Telephone Splice Box Above Ground		
Telephone Pole		
Traffic Signal		
Water Meter Valve Box		

VEGETATION ITEMS

	EX	PR
Deciduous Tree		
Bush		
Evergreen Tree		
Stump		
Vegetation Line		
Woods & Bush Line		

WATER FEATURE ITEMS

	EX	PR
Stream or Drainage Ditch		
Waters Edge		
Water Surface Indicator		
Water Point		
Disappearing Ditch		
Marsh		

STANDARD SYMBOLS, ABBREVIATIONS AND PATTERNS
(Sheet 8 of 8)

STANDARD 000001–04

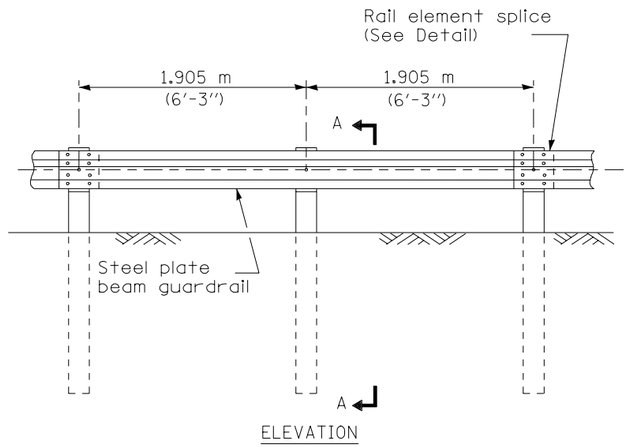

TYPE A

1.905 m (6′-3″) Typical post spacing

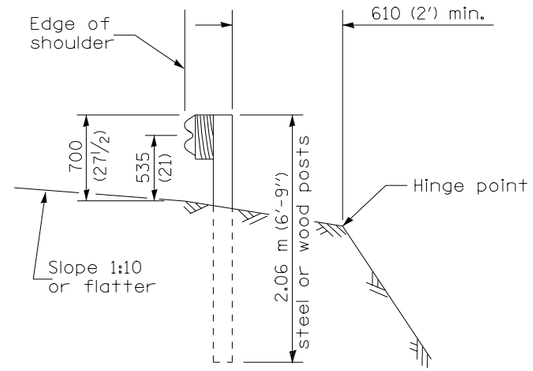

SECTION A-A

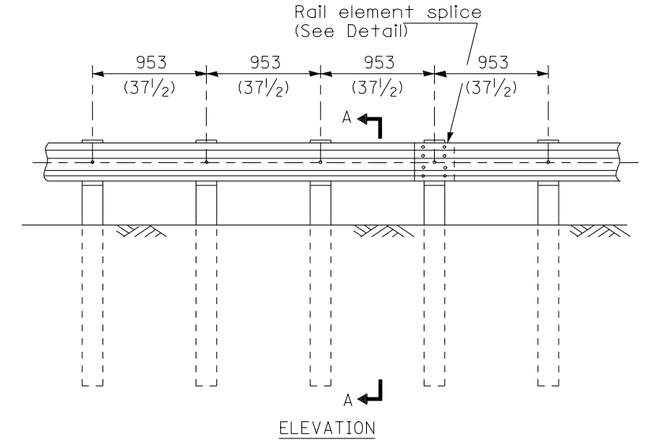

TYPE B

953 (37½) Closed post spacing

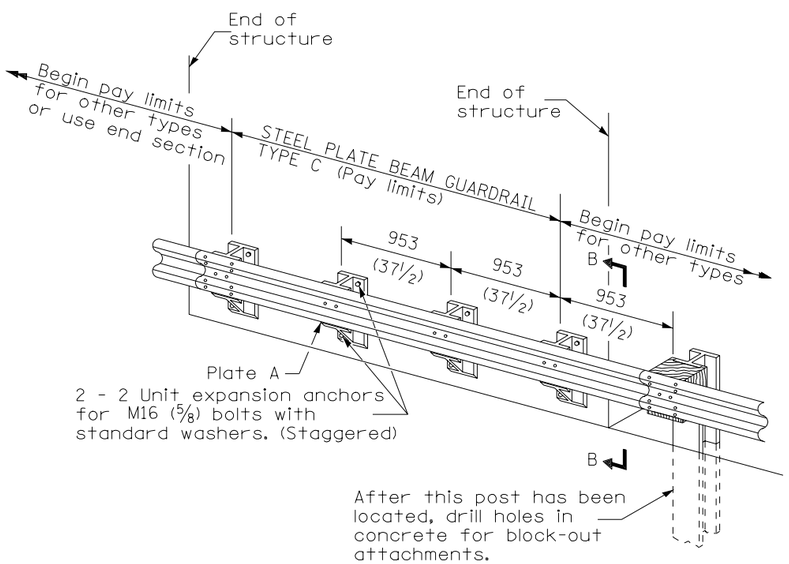

TYPE C

953 (37½) Block-out spacing

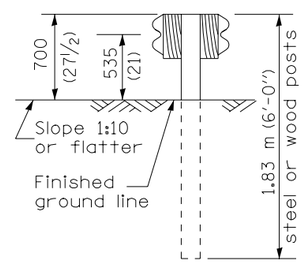

SECTION C-C

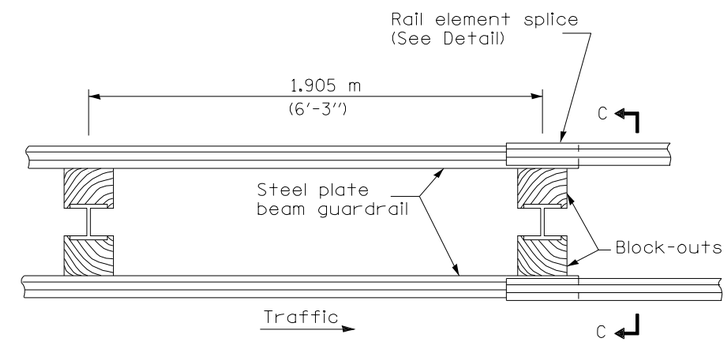

PLAN

TYPE D

Double steel plate beam guardrail
1.905 m (6′-3″) typical post spacing

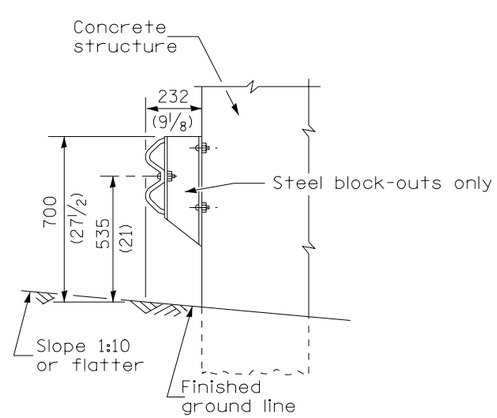

SECTION B-B

GENERAL NOTES

All slope ratios are expressed as units of vertical displacement to units of horizontal displacement (V:H).

All dimensions are in millimeters (inches) unless otherwise shown.

DATE	REVISIONS
4-1-06	Deleted plate washer F.
1-1-05	Rev. post in impervious
	material on sheet 4.

STEEL PLATE BEAM GUARDRAIL

(Sheet 1 of 4)

STANDARD 630001–06

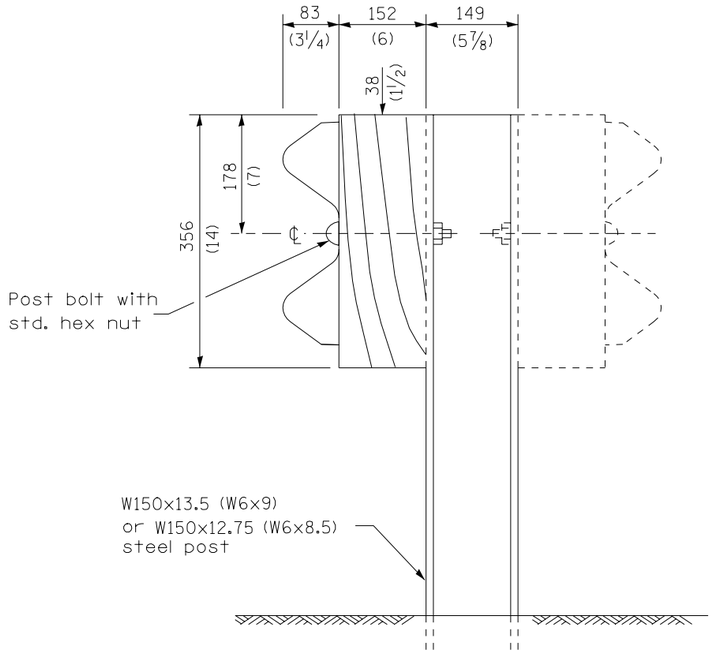

STEEL POST CONSTRUCTION

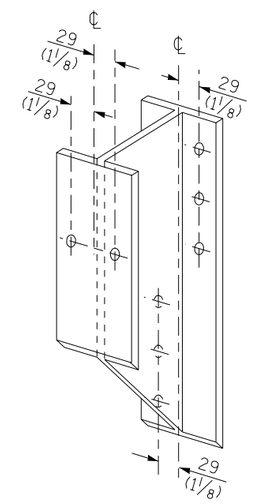

STEEL BLOCK-OUT DETAIL

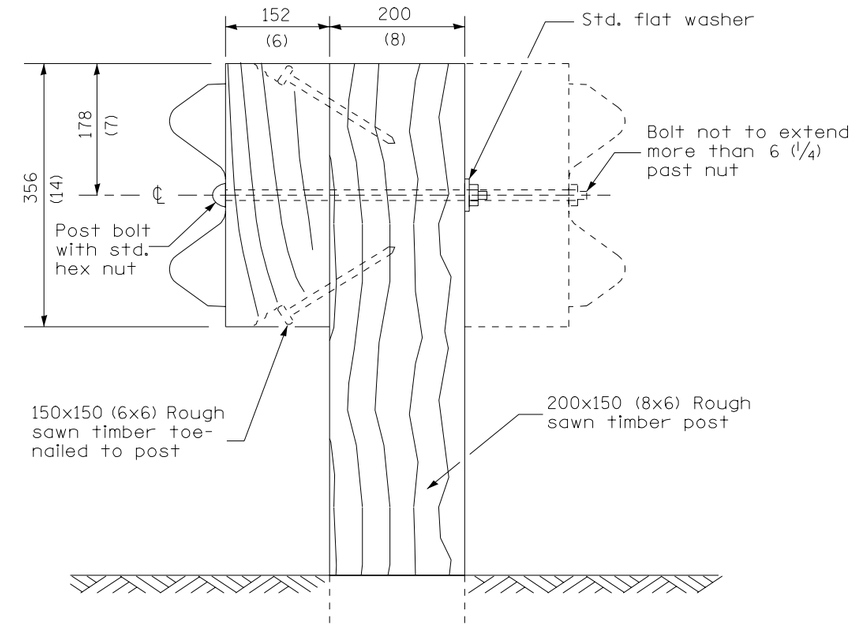

WOOD POST CONSTRUCTION

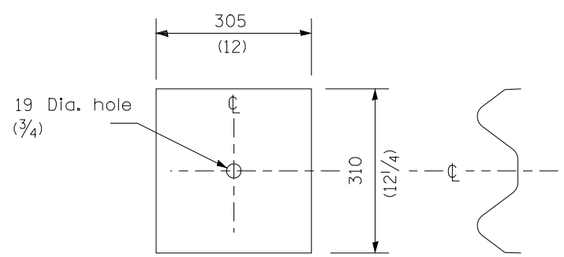

NOTE

Plate A shall be placed between rail element and block-out at non-splice mounting points only when steel block-outs are used.

PLATE A

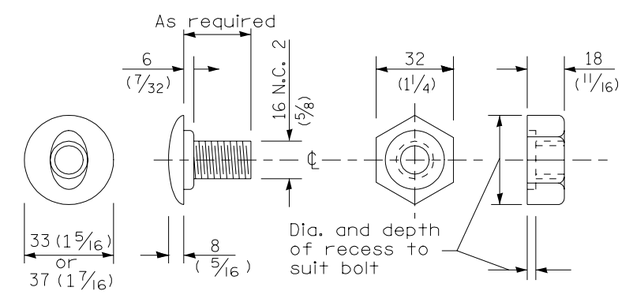

POST OR SPLICE BOLT & NUT

STEEL PLATE BEAM GUARDRAIL

(Sheet 2 of 4)

STANDARD 630001–06

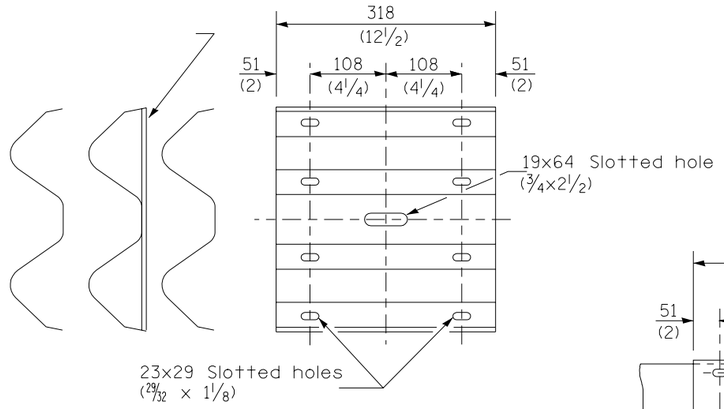

SPLICE PLATE

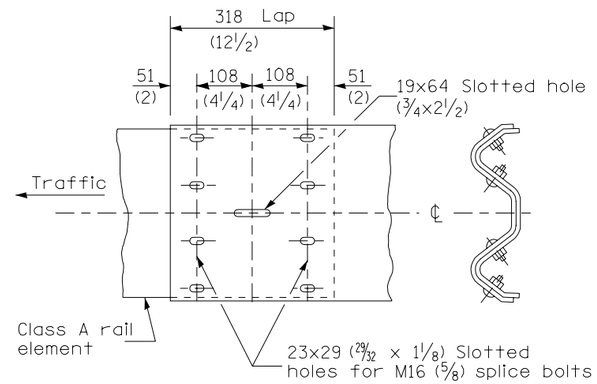

RAIL ELEMENT SPLICE

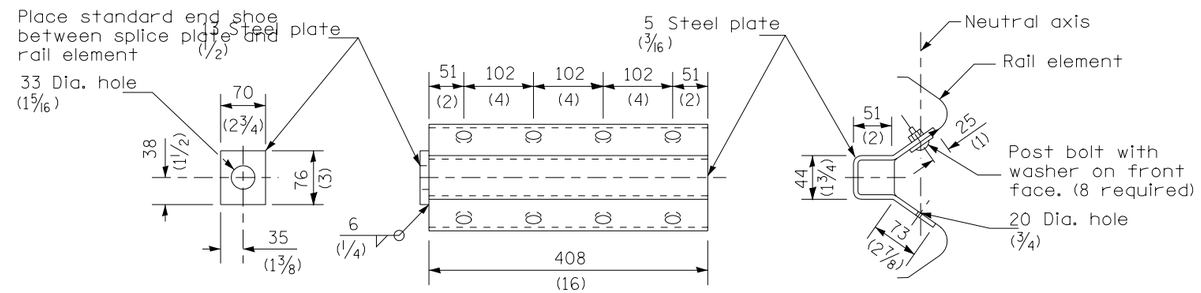

NOTE

Anchor plate T shall be used to attach cable assembly to guardrail when required on traffic barrier terminals.

ANCHOR PLATE T DETAILS

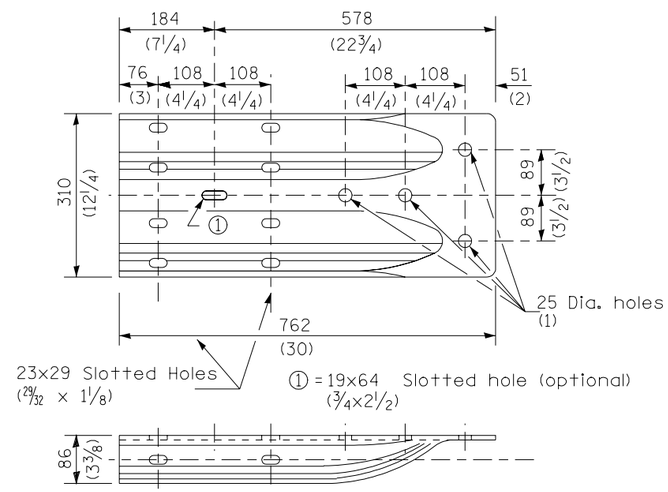

ALTERNATE END SHOE

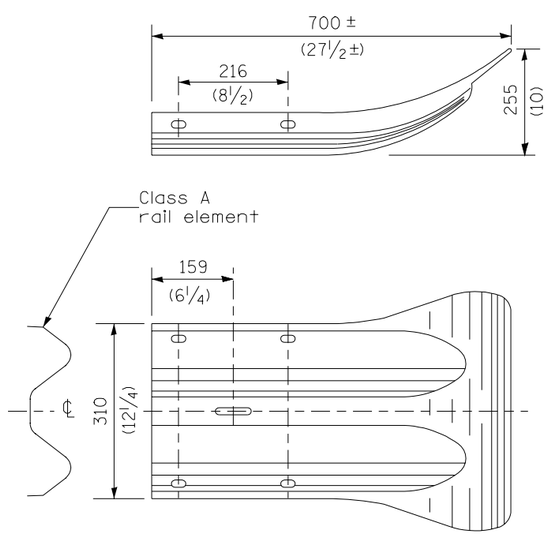

END SECTION

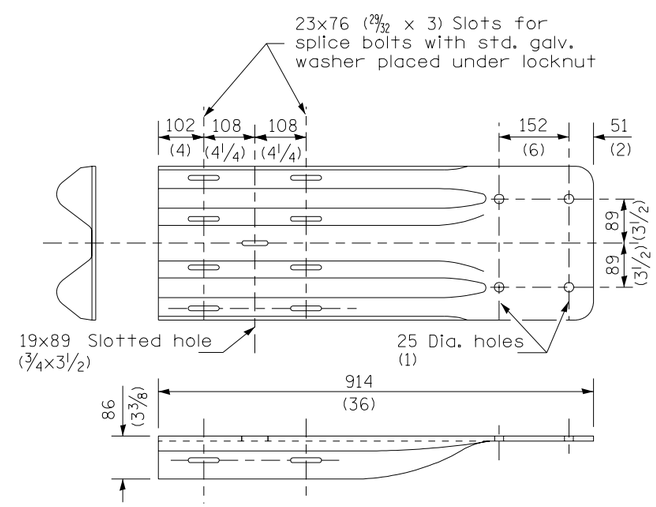

NOTE

When end shoe is attached to a bridge parapet which has an expansion joint, the bolts shall be provided with a locknut or double nut and shall be tightened only to a point that will allow guardrail movement.

The standard end shoe shall be attached to the concrete with pre-drilled or self-drilling anchor bolts. The anchor cone shall be set flush with the surface of the concrete.

Externally threaded studs protruding from the surface of the concrete will not be permitted.

END SHOE

STEEL PLATE BEAM GUARDRAIL

(Sheet 3 of 4)

STANDARD 630001–06

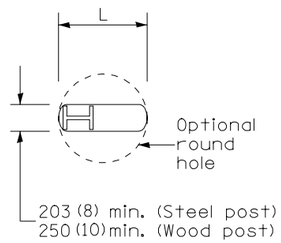

PLAN

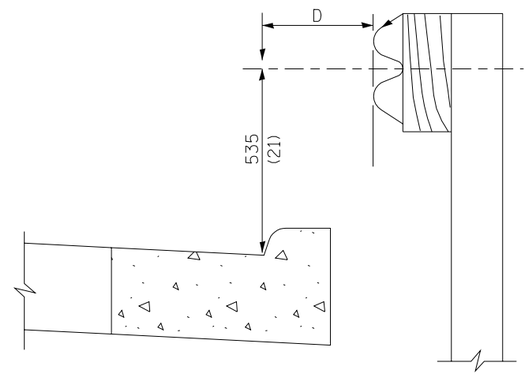

Note:
If it is necessary for D to be more than 300 (12) and less than 3.0 m (10'-0") type M-5 (M-2) curb and gutter (Std. 606001) shall be used in front of and in advance of the guardrail.

GUARDRAIL PLACED BEHIND CURB

(D = 0 desirable to 300 (12) maximum)

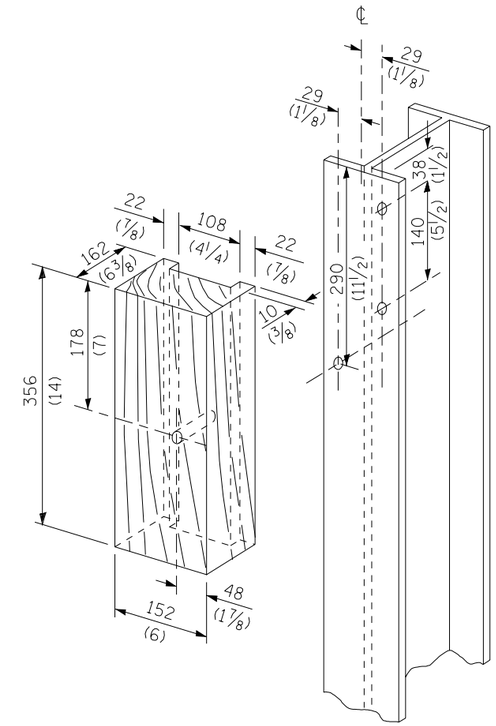

WOOD BLOCK-OUT AND STEEL POST DETAILS

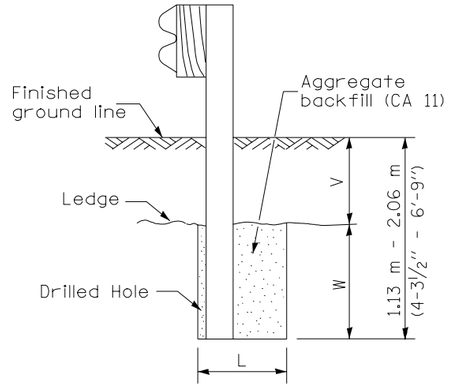

Note:
Ledge line is top of rock ledge or hard slag fill.

ELEVATION

FOOTING FOR POST WHEN IMPERVIOUS MATERIAL IS ENCOUNTERED

V	W	L	
		Steel Post	Wood Post
0 - 460 (0 - 18)	610 (24)	530 (21)	580 (23)
>460 - 825 (>18 - 41.5)	305 (12)	203 (8)	250 (10)
>825 - 1.13 m (>41.5 - 53.5)	305 - 0 (12 - 0)	203 (8)	250 (10)

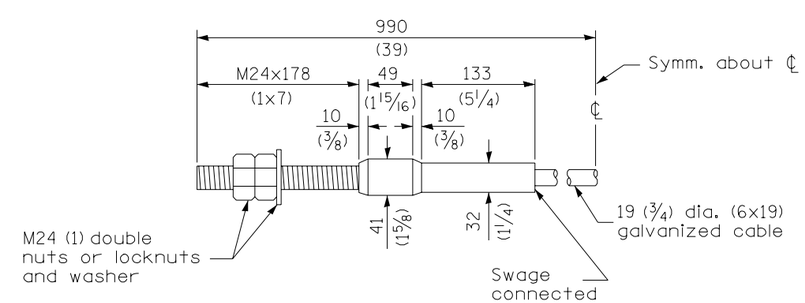

CABLE ASSEMBLY

(18,100 kg (40,000 lbs.) min. breaking strength)
Tighten to taut tension.

STEEL PLATE BEAM GUARDRAIL

(Sheet 4 of 4)

STANDARD 630001–06

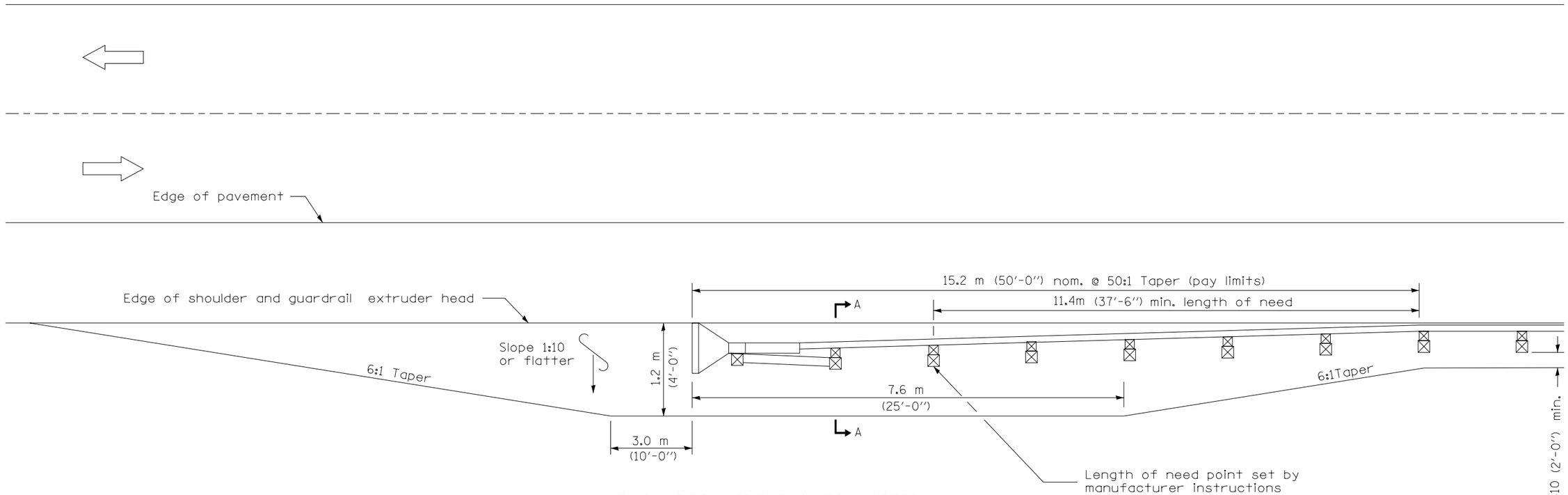

SHOULDER WIDENING TRANSITION
FOR TANGENT TERMINAL

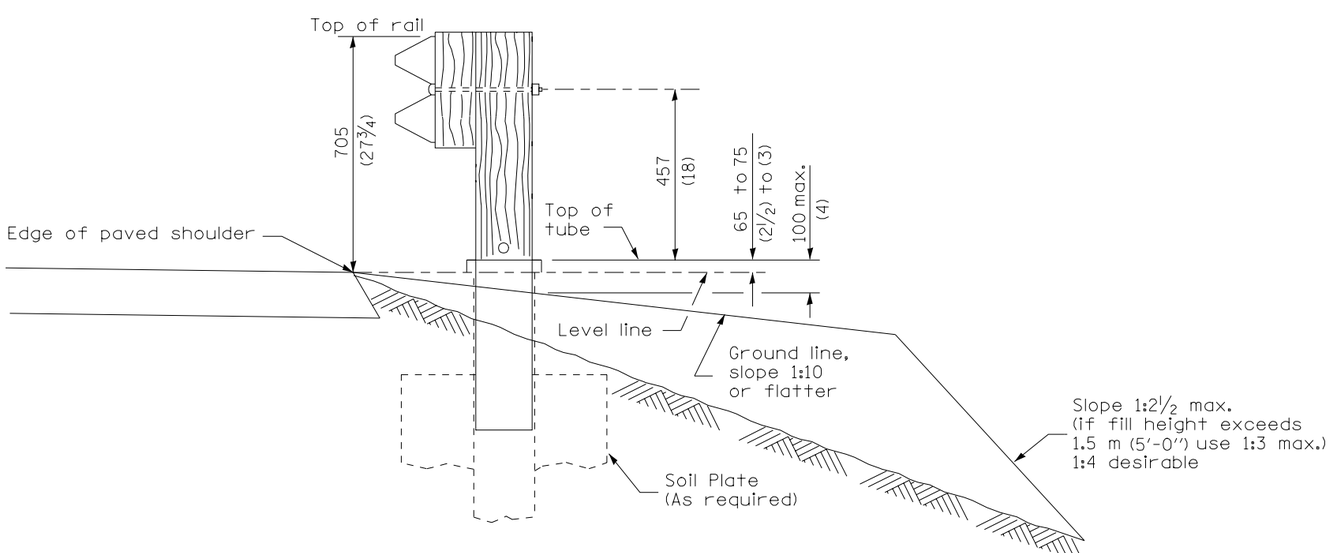

SECTION A-A

GENERAL NOTES

50:1 Taper required so the guardrail head will not encroach on the shoulder.

All slope ratios are expressed as units of vertical displacement to units of horizontal displacement (V:H).

All dimensions are in millimeters (inches) unless otherwise shown.

SHOULDER WIDENING FOR TYPE 1 (SPECIAL) GUARDRAIL TERMINALS
(Sheet 1 of 2)

STANDARD 630301–03

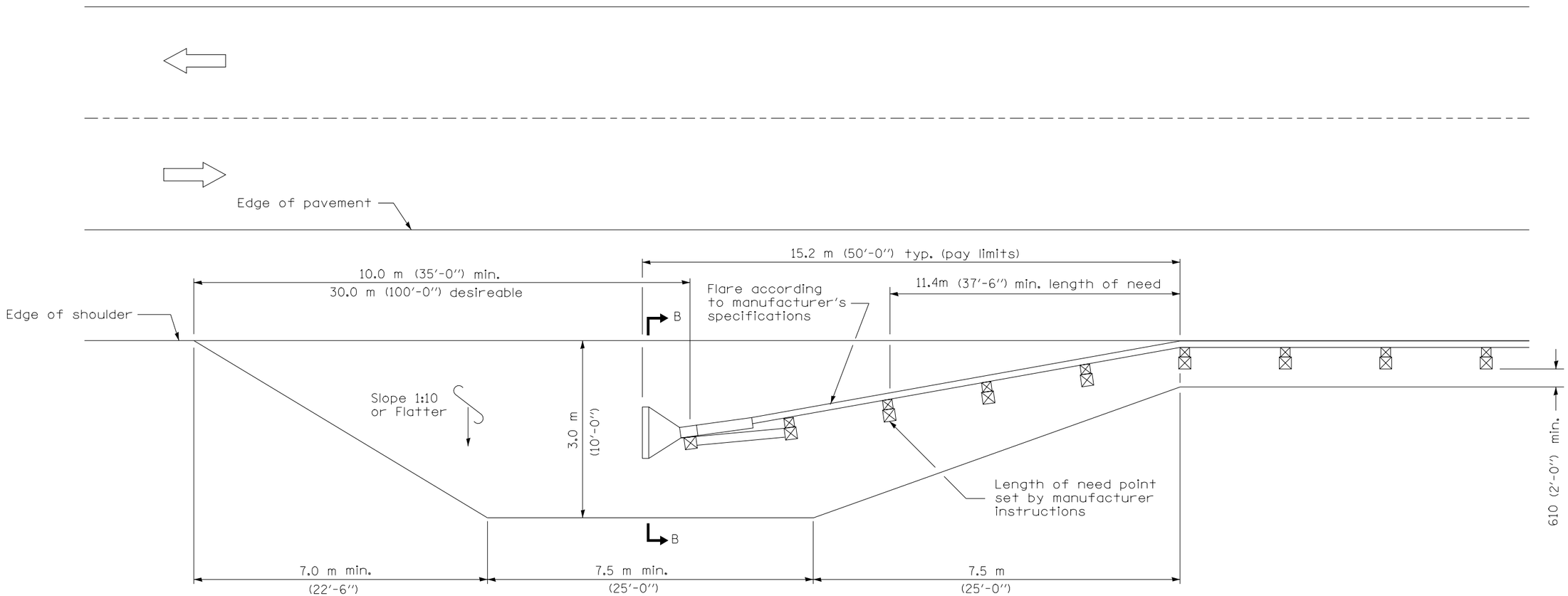

SHOULDER WIDENING TRANSITION FOR FLARED TERMINAL

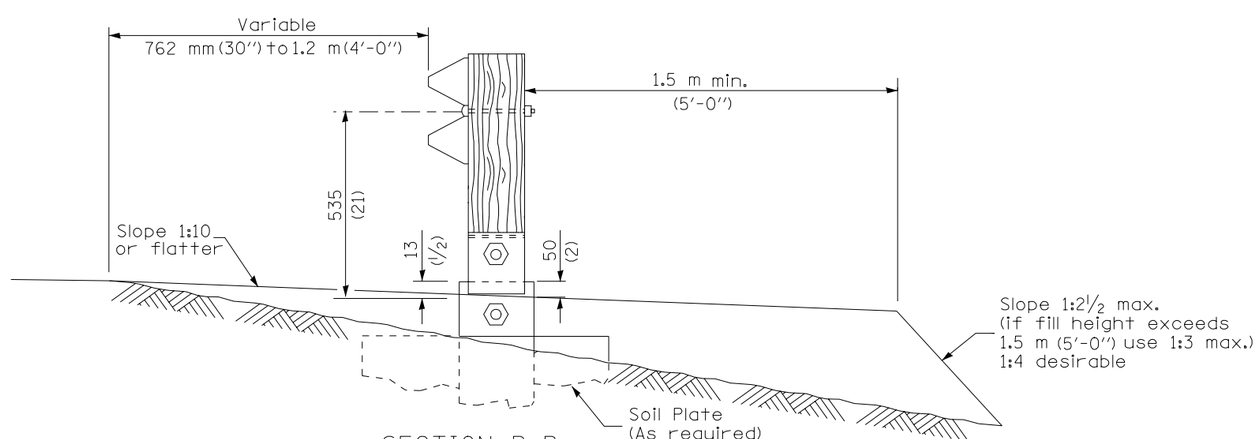

SECTION B-B

(End section omitted for clarity.)

SHOULDER WIDENING FOR TYPE 1 (SPECIAL) GUARDRAIL TERMINALS
(Sheet 2 of 2)

STANDARD 630301–03

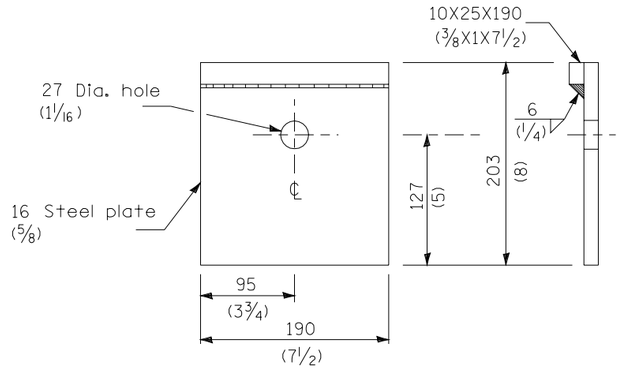

BEARING PLATE K

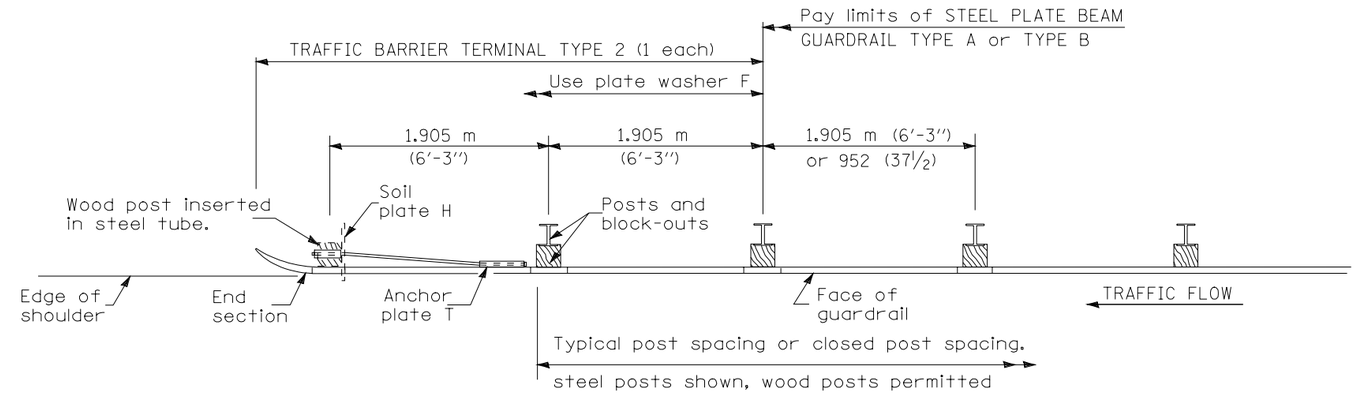

PLAN

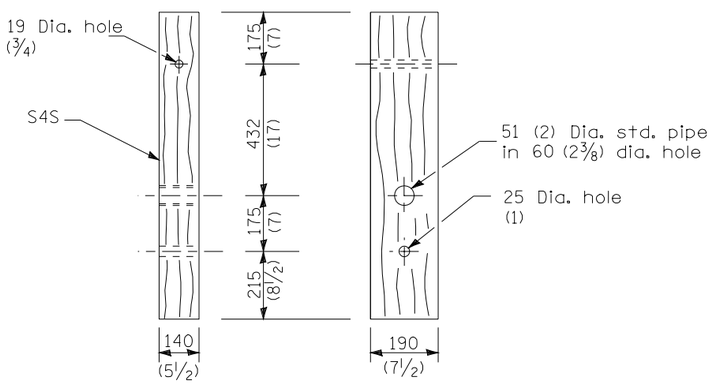

WOOD POST

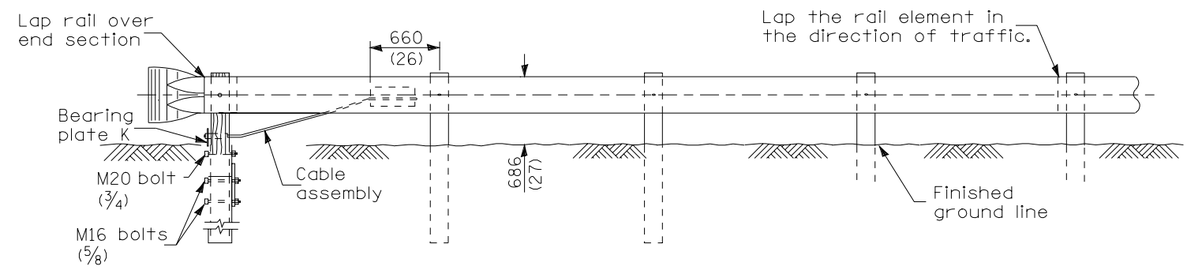

ELEVATION

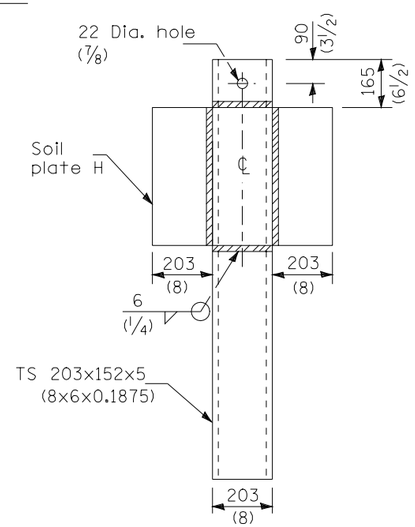

ALTERNATE SOIL
PLATE CONNECTION

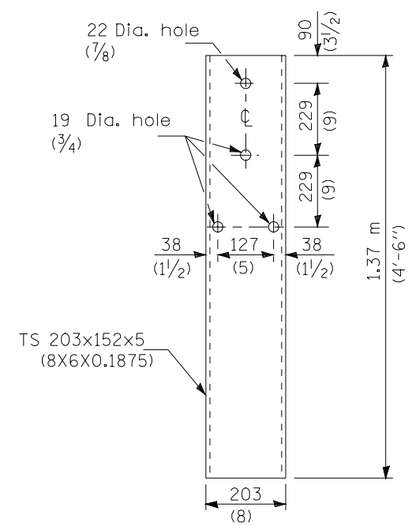

STEEL TUBE

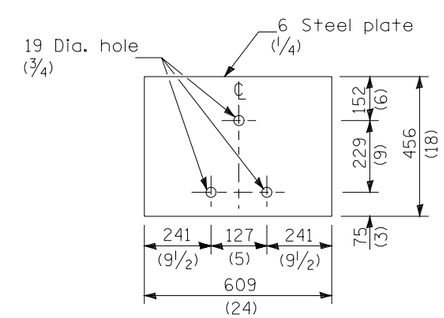

SOIL PLATE H

GENERAL NOTES

See Standard 630001 for details of guardrail not shown.

Use plate washer F at all posts.

The bearing plate K shall be held in position by (2) two eight penny nails driven into the post and bent over the top of the plate.

All dimensions are in millimeters (inches) unless otherwise shown.

TRAFFIC BARRIER TERMINAL TYPE 2

STANDARD 631011–02

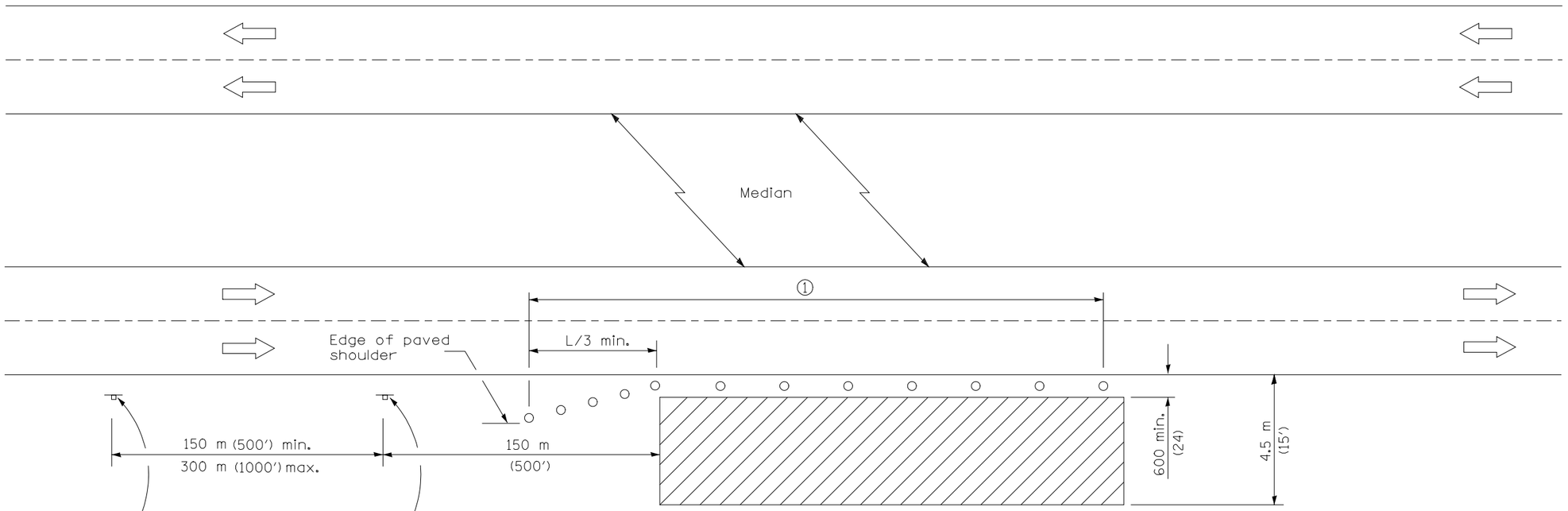

For contract construction projects

W20-1(0)-48

W21-1a(0)-48

Or

W21-I110(0)-48

For maintenance and utility projects

W21-4(0)-48

TYPICAL APPLICATIONS

Utility operations
Culvert extensions
Side slope changes
Guardrail installation and maintenance
Delineator installation
Landscaping operations
Shoulder repair
Sign installation and maintenance

SYMBOLS

Work area

Sign

Cone, drum or barricade

① When the work operation exceeds one hour, cones, drums or barricades shall be placed at 8 m (25′) centers for L/3 distance, and at 15 m (50′) centers through the remainder of the work area.

GENERAL NOTES

This Standard is used where any vehicles, equipment, workers or their activities will encroach in the area 4.5 m (15′) to 600 (24) from the edge of pavement.

Calculate L as follows:

SPEED LIMIT	FORMULAS	
	Metric	(English)
70 km/h (40 mph) or less:	$L = \frac{WS^2}{150}$	$L = \frac{WS^2}{60}$
80 km/h (45 mph) or greater:	$L = 0.65(W)(S)$	$L = (W)(S)$

W = Width of offset in meters (feet).

S = Normal posted speed km/h (mph).

All dimensions are in millimeters (inches) unless otherwise shown.

OFF-RD OPERATIONS, MULTILANE, 4.5 m (15′) TO 600 mm (24″) FROM PAVEMENT EDGE

STANDARD 701101–01

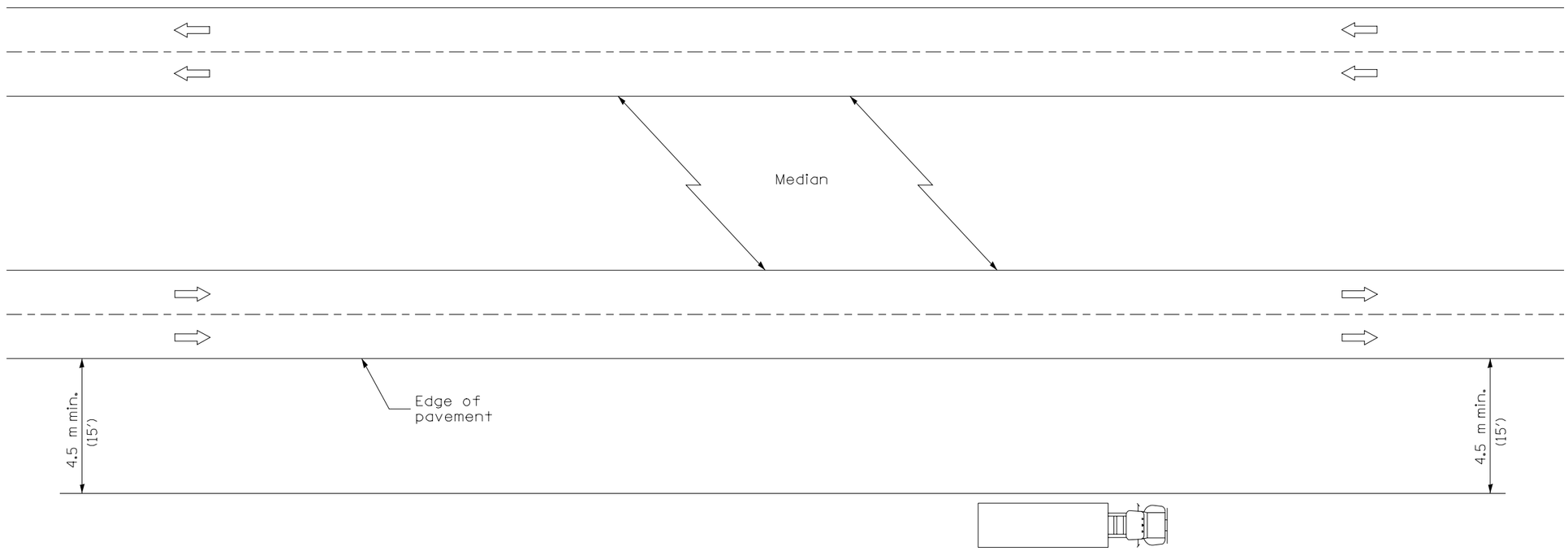

TYPICAL APPLICATIONS

Landscaping work
Utility work
Fencing contracts

GENERAL NOTES

This Standard is used where at all times all vehicles, equipment, workers or their activities are more than 4.5 m (15') from the edge of pavement.

When the work operation requires that two or more work vehicles cross the 4.5 m (15') clear zone in any one hour, traffic control shall be according to Standard 701101.

This Standard also applies to work performed in the median more than 4.5 m (15') from either pavement.

All dimensions are in millimeters (inches) unless otherwise shown.

OFF-RD OPERATIONS, MULTILANE, MORE THAN 4.5 m (15') AWAY

STANDARD 701106–01

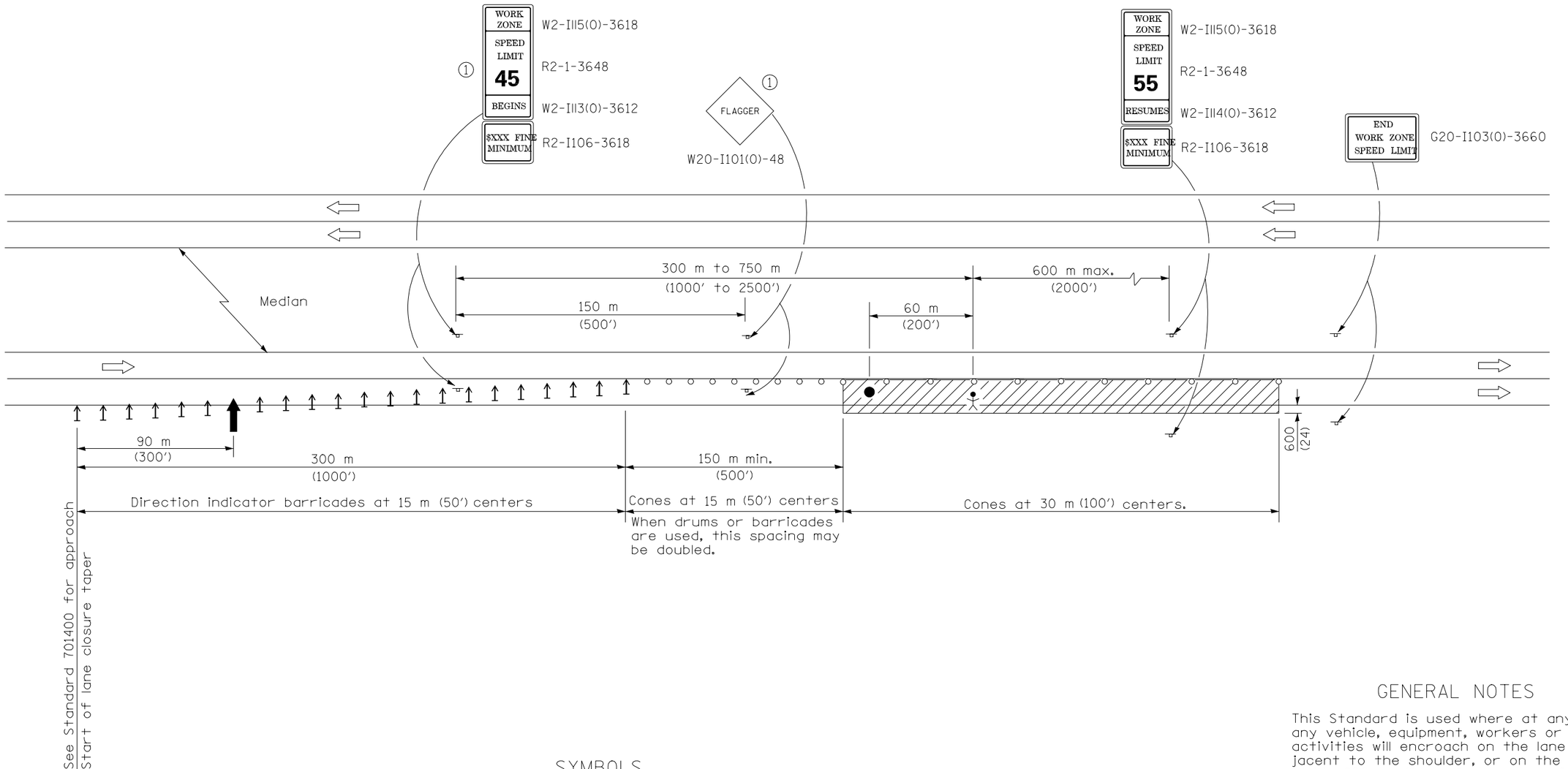

TYPICAL APPLICATIONS

Pavement patch

Utility operations

Bituminous resurfacing

SYMBOLS

- Arrow board
- Work area
- Worker
- Sign
- Direction indicator barricade
- Cone, drum or barricade
- Flagger with traffic control sign

1 Work zone speed limit signs and FLAGGER signs shall be moved as necessary to maintain the required spacing between the signs and the workers in each separate work activity.

GENERAL NOTES

This Standard is used where at any time, any vehicle, equipment, workers or their activities will encroach on the lane adjacent to the shoulder, or on the shoulder within 600 mm (24″) of the edge of pavement for day light operation.

This Standard must always be used in combination with Standard 701400.

This Standard also applies when work is being performed in the left lane. Under these conditions, the set up would be a mirror image to what is shown.

All dimensions are in millimeters (inches) unless otherwise shown.

LANE CLOSURE,
FREEWAY/EXPRESSWAY,
DAY OPERATIONS ONLY

STANDARD 701406–04

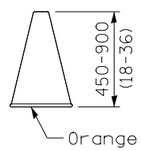

CONE

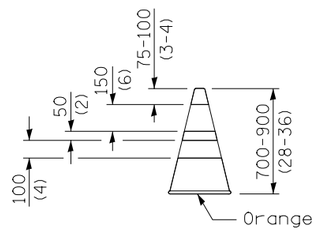

REFLECTORIZED CONE

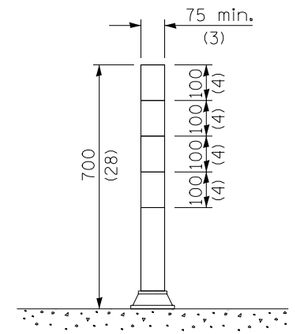

FLEXIBLE DELINEATOR

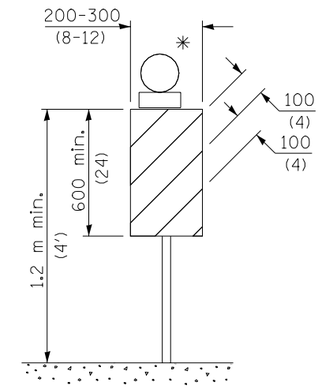

VERTICAL PANEL

POST MOUNTED

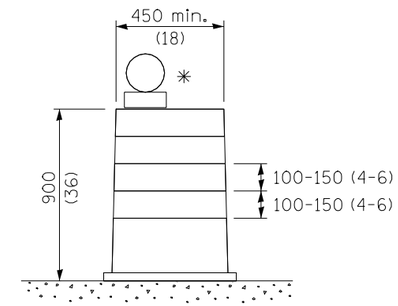

DRUM

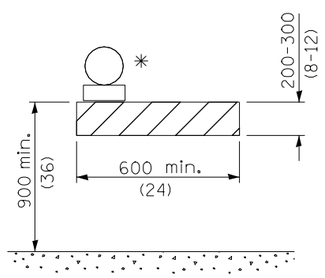

TYPE I BARRICADE

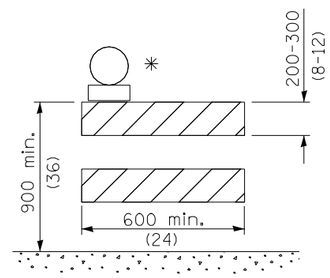

TYPE II BARRICADE

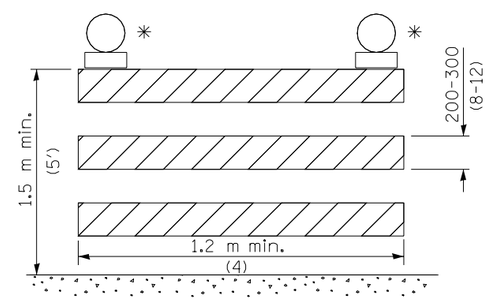

TYPE III BARRICADE

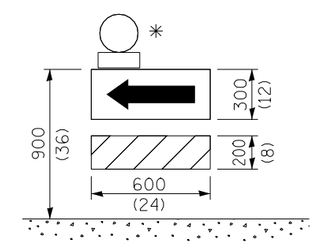

DIRECTION INDICATOR BARRICADE

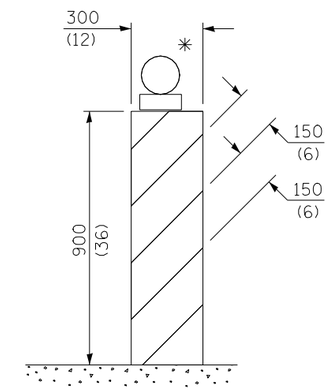

VERTICAL BARRICADE

* Warning lights (if required)

GENERAL NOTES

All heights shown shall be measured above the pavement surface.

All dimensions are in millimeters (inches) unless otherwise shown.

DATE	REVISIONS
4-1-06	Revised vert. barricade,
	post mounted signs, and
	signs on temp. supports.
1-1-05	Added note to work limit
	signing and re-added
	Type I barricade.

TRAFFIC CONTROL DEVICES

(Sheet 1 of 3)

STANDARD 702001–06

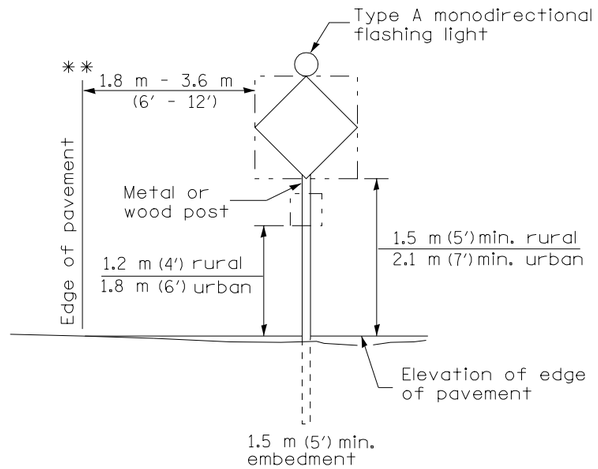

POST MOUNTED SIGNS

** When curb or paved shoulder are present this dimension shall be 600 (24) to the face of curb or 1.8 m (6′) to the outside edge of the paved shoulder.

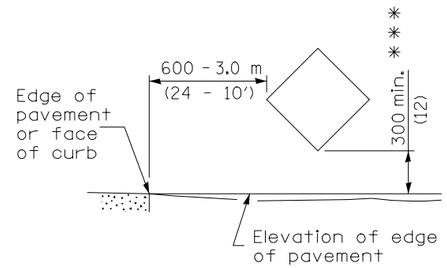

SIGNS ON TEMPORARY SUPPORTS

*** When work operations exceed four days, this dimension shall be 1.5 m (5′) min.

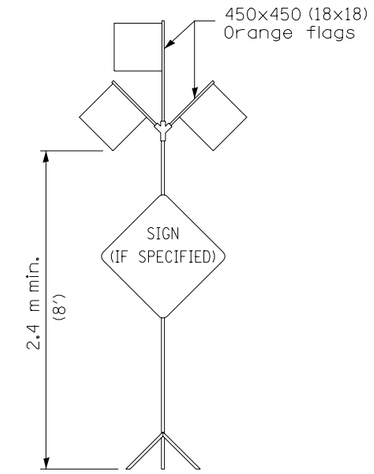

HIGH LEVEL WARNING DEVICE

ROAD CONSTRUCTION NEXT X MILES	END CONSTRUCTION
G20-1(0)-6036	G20-2a(0)-6024

This signing is required for all projects 3200 m (2 miles) or more in length.

ROAD CONSTRUCTION NEXT X MILES sign shall be placed 150 m (500′) in advance of project limits.

END CONSTRUCTION sign shall be erected at the end of the job unless another job is within 3200 m (2 miles) .

Dual sign displays shall be utilized on multi-lane highways.

WORK LIMIT SIGNING

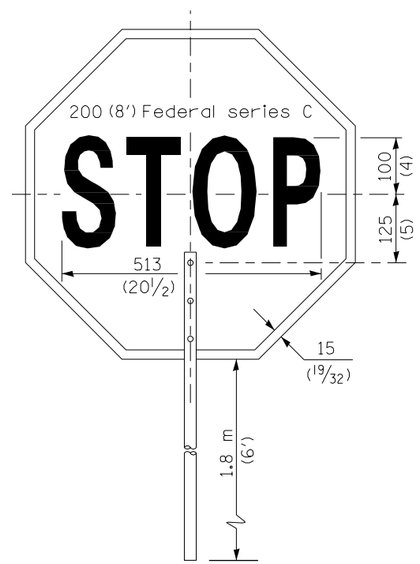

FRONT SIDE

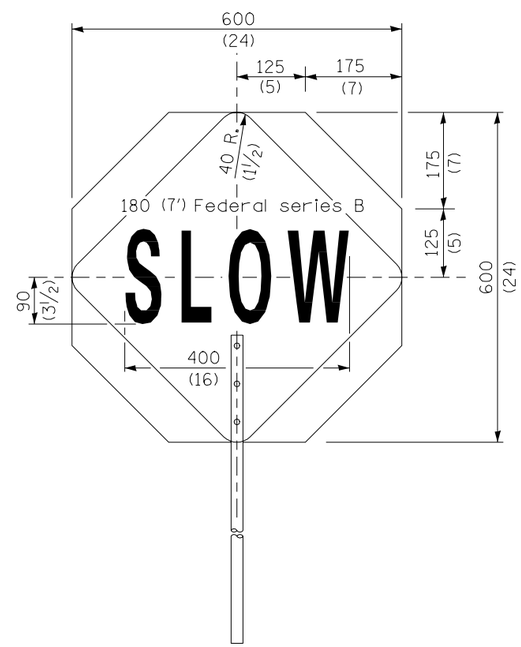

REVERSE SIDE

FLAGGER TRAFFIC CONTROL SIGN

All dimensions are in millimeters (inches) unless otherwise shown.

TRAFFIC CONTROL DEVICES

(Sheet 2 of 3)

STANDARD 702001–06

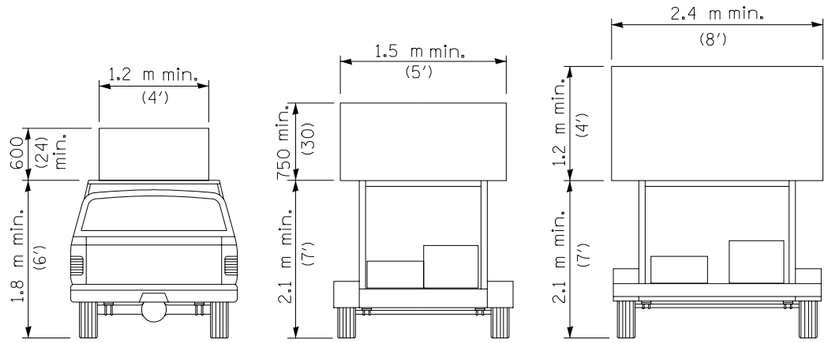

TYPE A
ROOF
MOUNTED

TYPE B
ROOF OR TRAILER
MOUNTED

TYPE C
TRAILER
MOUNTED

ARROW BOARDS

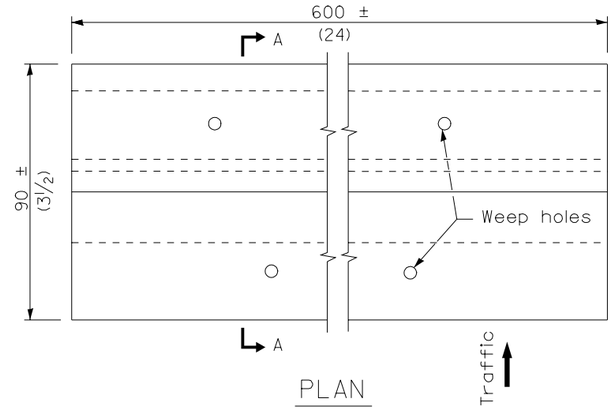

PLAN

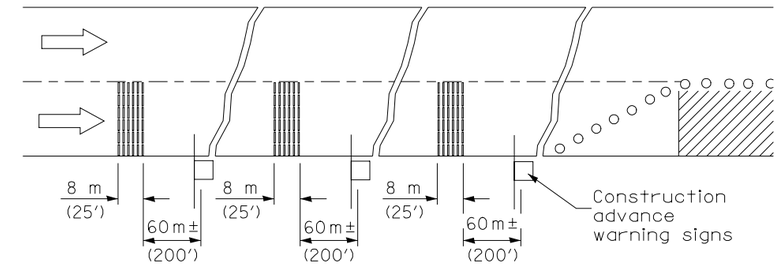

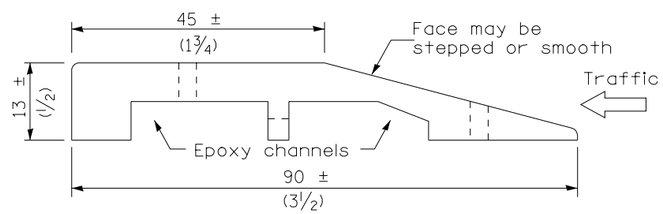

SECTION A-A

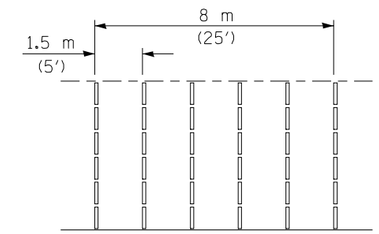

TYPICAL INSTALLATION

TEMPORARY RUMBLE STRIPS

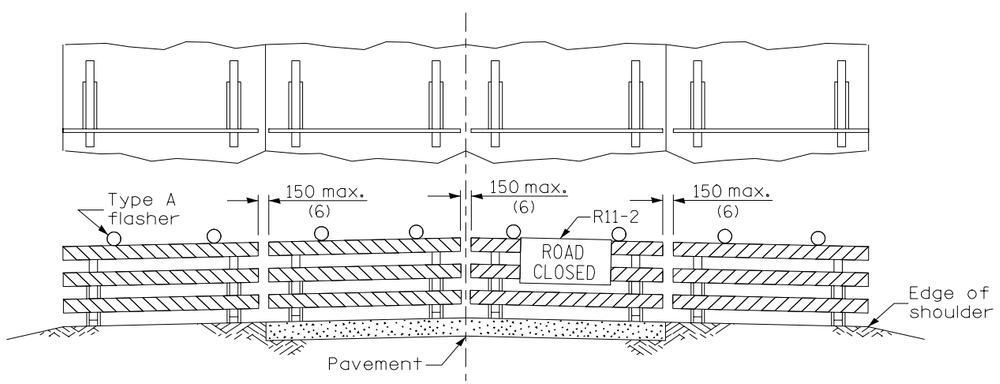

ROAD CLOSED TO ALL TRAFFIC

Reflectorized striping may be omitted on the back side of the barricades. If a Type III barricade with an attached sign panel which meets NCHRP 350 is not available, the sign may be mounted on an NCHRP 350 temporary sign support directly in front of the barricade.

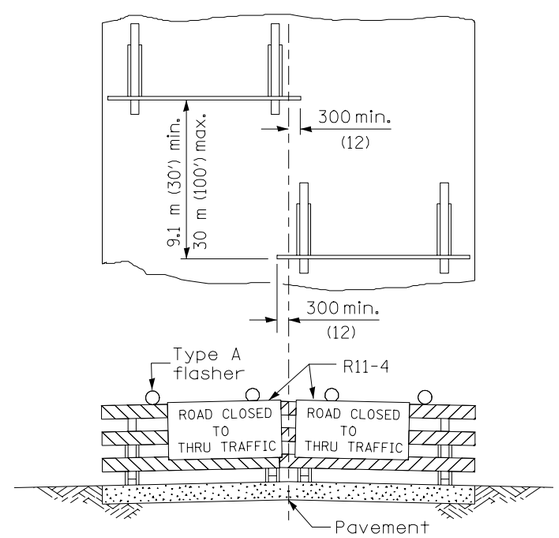

ROAD CLOSED TO THRU TRAFFIC

Reflectorized striping shall appear on both sides of the barricades. If a Type III barricade with an attached sign panel which meets NCHRP 350 is not available, the signs may be mounted on NCHRP 350 temporary sign supports directly in front of the barricade.

TYPICAL APPLICATIONS OF
TYPE III BARRICADES CLOSING A ROAD

All dimensions are in millimeters (inches) unless otherwise shown.

TRAFFIC CONTROL
DEVICES
(Sheet 3 of 3)

STANDARD 702001–06

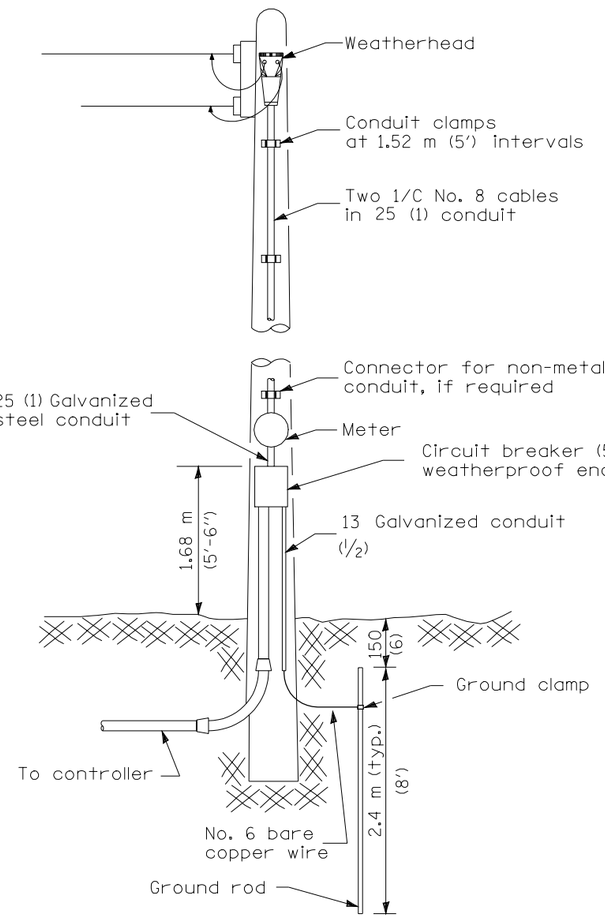

TYPE A

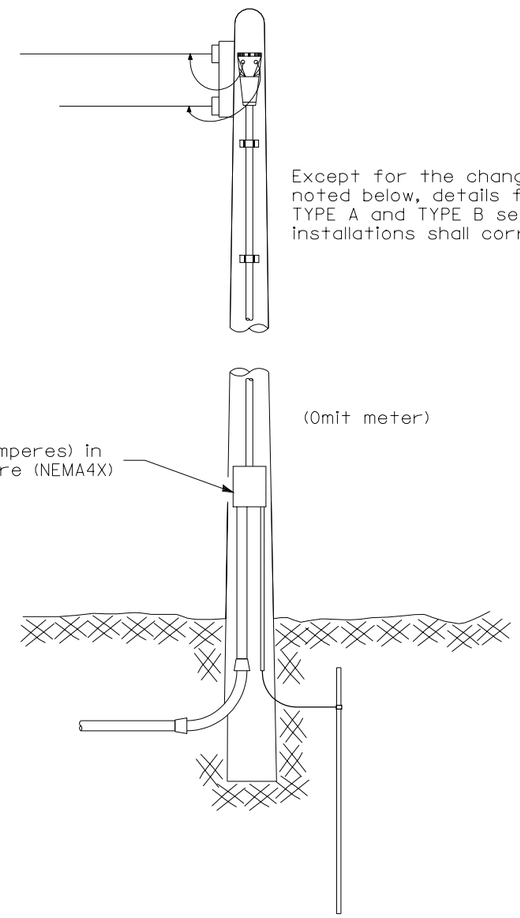

TYPE B

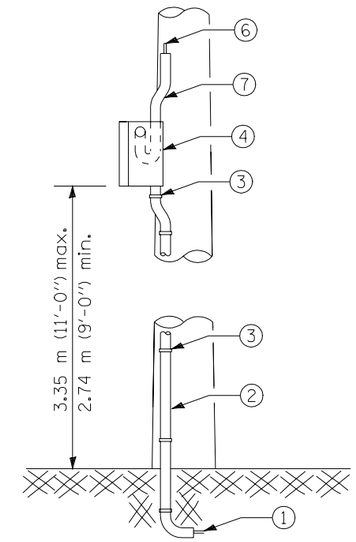

The following equipment is to be furnished and installed on the TYPE C installation.

1. = Cable in conduit (electric cable, No. 6, 2/C except where otherwise specified)
2. = Galvanized steel conduit 32 (1 1/4) with bend
3. = Galvanized conduit clamps
4. = Aluminum weatherproof box with gasketed cover. Weatherproof box shall be installed facing the adjacent property line. (See diagram for alternate installation.)
5. = Ground stud for neutral connection
6. = Service cables
7. = Offset weatherproof fitting
8. = Circuit breaker

TYPE C

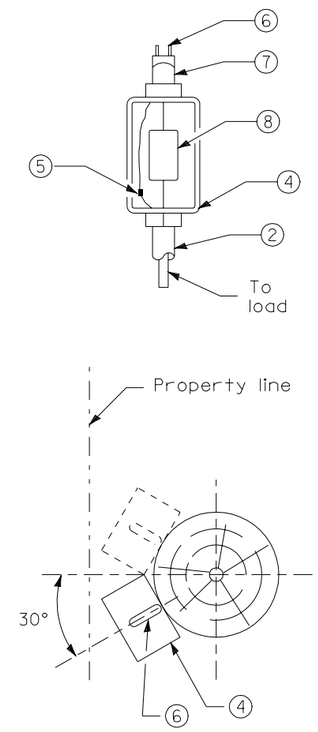

ALTERNATE INSTALLATION

(Installation when weatherproof box cannot be installed facing the adjacent property line.)

All dimensions are in millimeters (inches) unless otherwise shown.

ELECTRICAL SERVICE INSTALLATION DETAILS

STANDARD 805001