Hoop Building Plans

906 E Harvest Drive
P.O. Box 255
Mount Pleasant, IA 52641

Project: BG-4M31(000)-80-44

INDEX OF DRAWINGS:

SHEET NO.		SHEET NAME
02	HA-1	HOOP BUILDING PLAN

IOWA DOT
SMARTER I SIMPLER I CUSTOMER DRIVEN

OFFICE OF FACILITIES SUPPORT

800 LINCOLN WAY, AMES, IOWA 50010

I hereby certify that the portion of this technical submission described below was prepared by me or under my direct supervision and responsible charge. I am a duly registered architect under the laws of the state of Iowa.

Jerry L. Burnes
Printed or typed name

Signature
June 30, 2016
Registration expires

Date
April 29, 2016
Date issued

Pages or sheets covered by this seal: HA-1

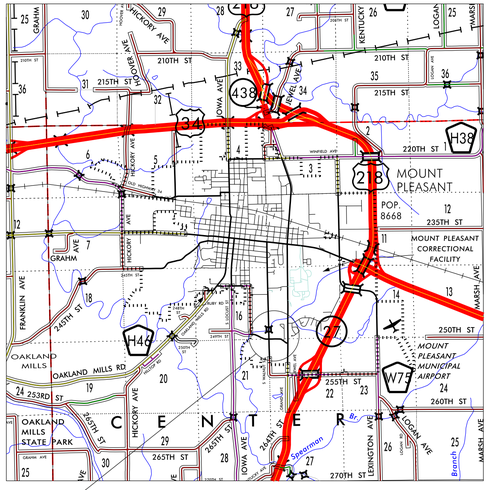

PROJECT LOCATION

SCALE: 1"=1 MILE

NORTH

DGN_LOC

NOTES:

1. CONTRACTOR TO PROVIDE ALL MATERIALS FOR BUILDING PURPOSES
2. ASPHALT FLOOR AND APPROACH TO BE COMPLETED BY OWNER
3. STEEL TRUSSES ARE TO BE HOT DIPPED GALVANIZED
4. FABRIC TO BE MINIMUM 12 OZ PER SQ YD
5. PROVIDE 10 YEAR WARRANTY ON ENTIRE HOOP BUILDING SYSTEM
6. FABRIC ACCORDIAN STYLE DOOR TO BE INCLUDED
7. CONCRETE PANELS TO BE L-SHAPED PRECAST UNITS
8. INCLUDE 36" X 36" VENT (PVC) ON NORTH ELEVATION

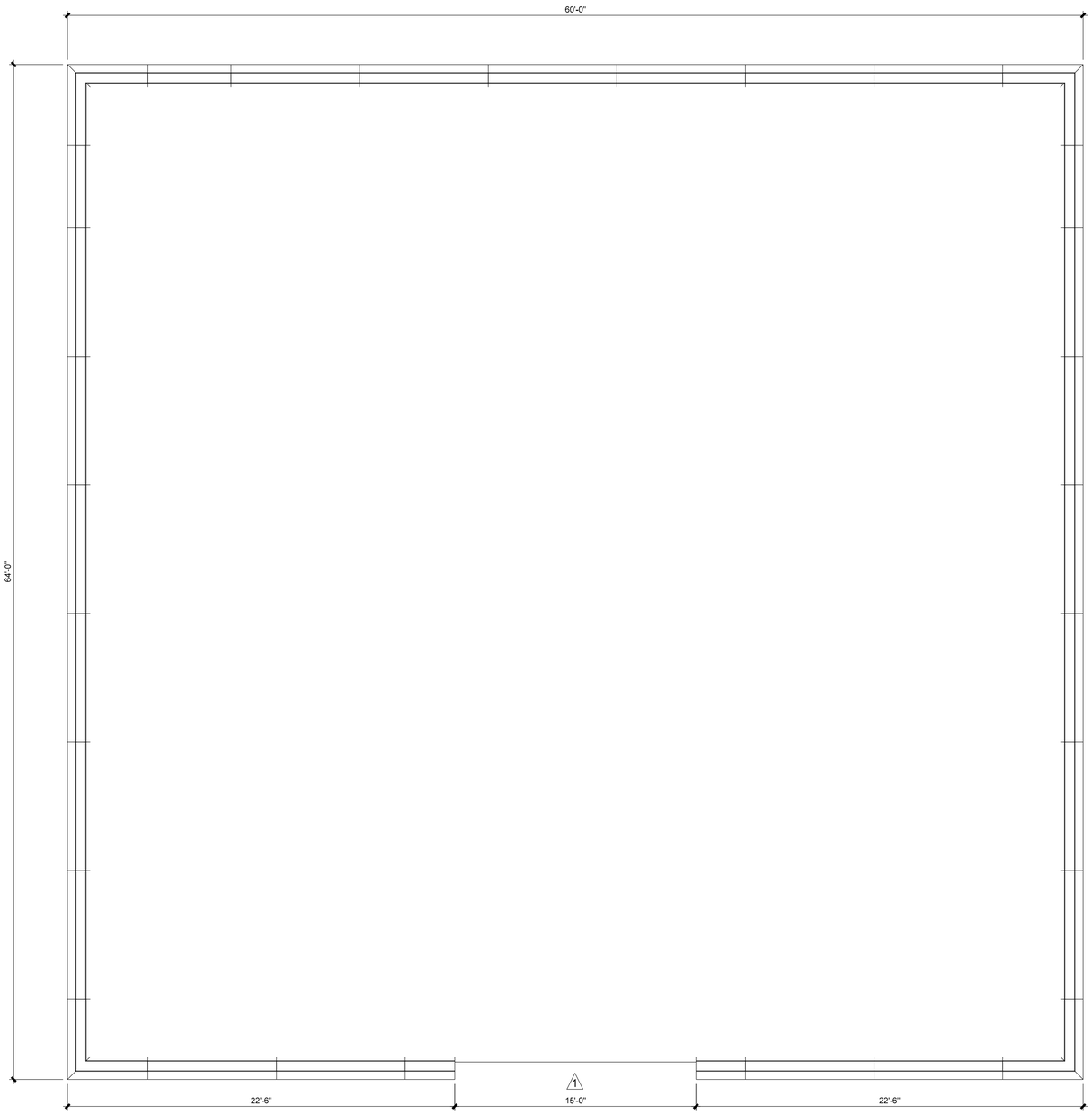

FLOOR PLAN

SCALE: 1/4" = 1'-0"

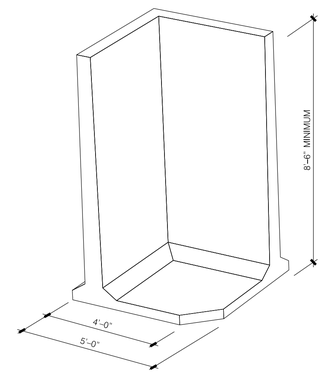

CORNER PANEL DETAIL

SCALE: N.T.S.

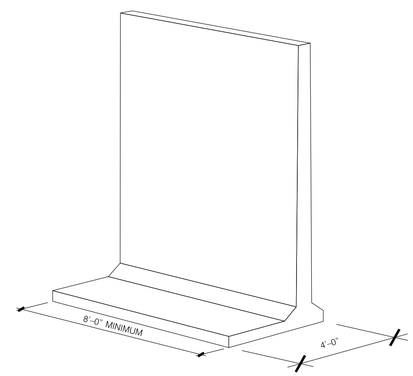

PANEL DETAIL

SCALE: N.T.S.

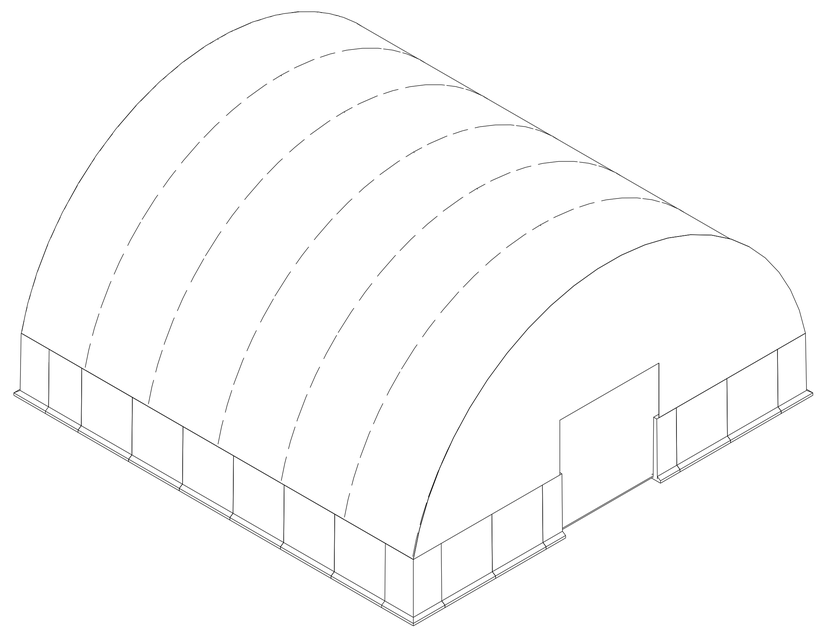

ISOMETRIC VIEW

SCALE: N.T.S.

DISTRICT: 05

COUNTY: HENRY

PROJECT NUMBER: BG-4M31(000)-80-44

MOUNT PLEASANT, IOWA

PROTOTYPE HOOP BUILDING

HOOP BUILDING PLAN

IOWA DOT
SMARTER | SIMPLER | CUSTOMER DRIVEN
OFFICE OF SUPPORT SERVICES
800 LINCOLN WAY
AMES, IOWA 50010 (515)239-1299

DATE: 29 APRIL 2016

DRAWN BY: DESIGN TEAM

APPROVED: J. BURNES

REVISIONS:

1 14 JUNE 2016

01 SHEET OF 01

HA-1

DGN_LOC