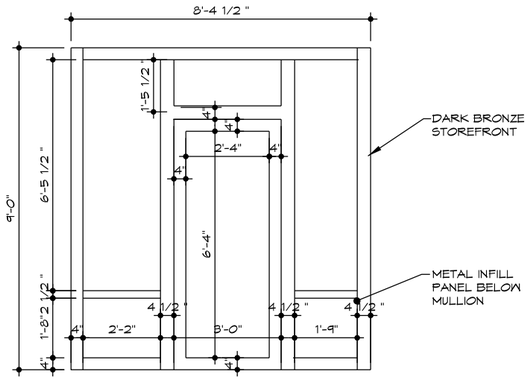

4 A-1 SOUTH ELEVATION

SCALE: 1/4"=1'-0"

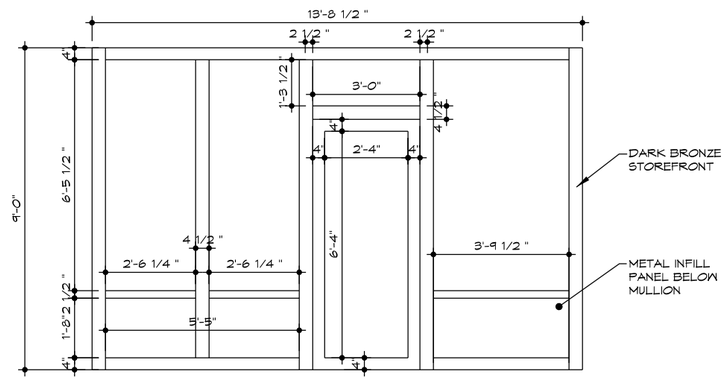

3 A-1 WEST ELEVATION

SCALE: 1/4"=1'-0"

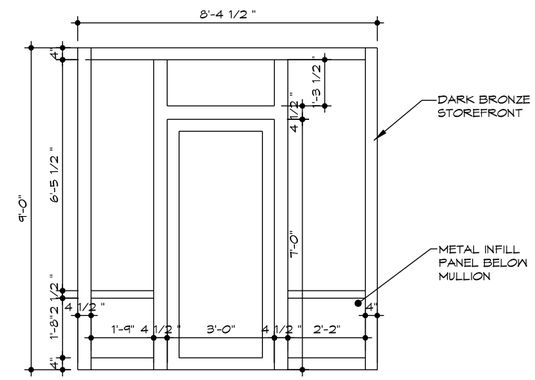

2 A-1 NORTH ELEVATION

SCALE: 1/4"=1'-0"

NOTES:

1. NEW STOREFRONT SYSTEM TO BE INSTALLED UP TO ACOUSTICAL CEILING
2. STOREFRONT SYSTEM TO MATCH EXISTING COLOR INFILL PANELS
3. CONTRACTOR TO FIELD VERIFY DIMENSIONS PRIOR TO ORDERING ANY MATERIALS
4. DOT TO MOVE ANY FURNITURE OR EQUIPMENT OBSTRUCTING CONSTRUCTION
5. DOOR 100 TO RECEIVE AUTOMATIC OPENER. CONTRACTOR TO COORDINATE ELECTRICAL INSTALLATION. ELECTRICIAN TO BE LICENSED
6. CONTRACTOR RESPONSIBLE FOR OBTAINING CITY CONSTRUCTION PERMITS WHERE REQUIRED; DOT TO PAY FEES

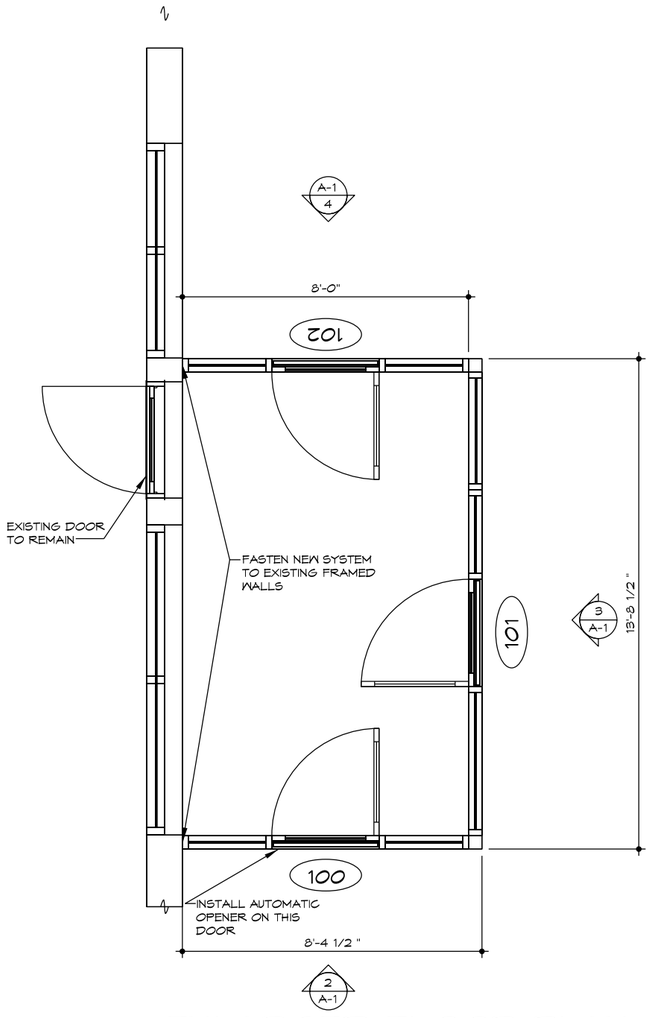

1 A-1 ENLARGED FLOOR PLAN

SCALE: 1/4"=1'-0"

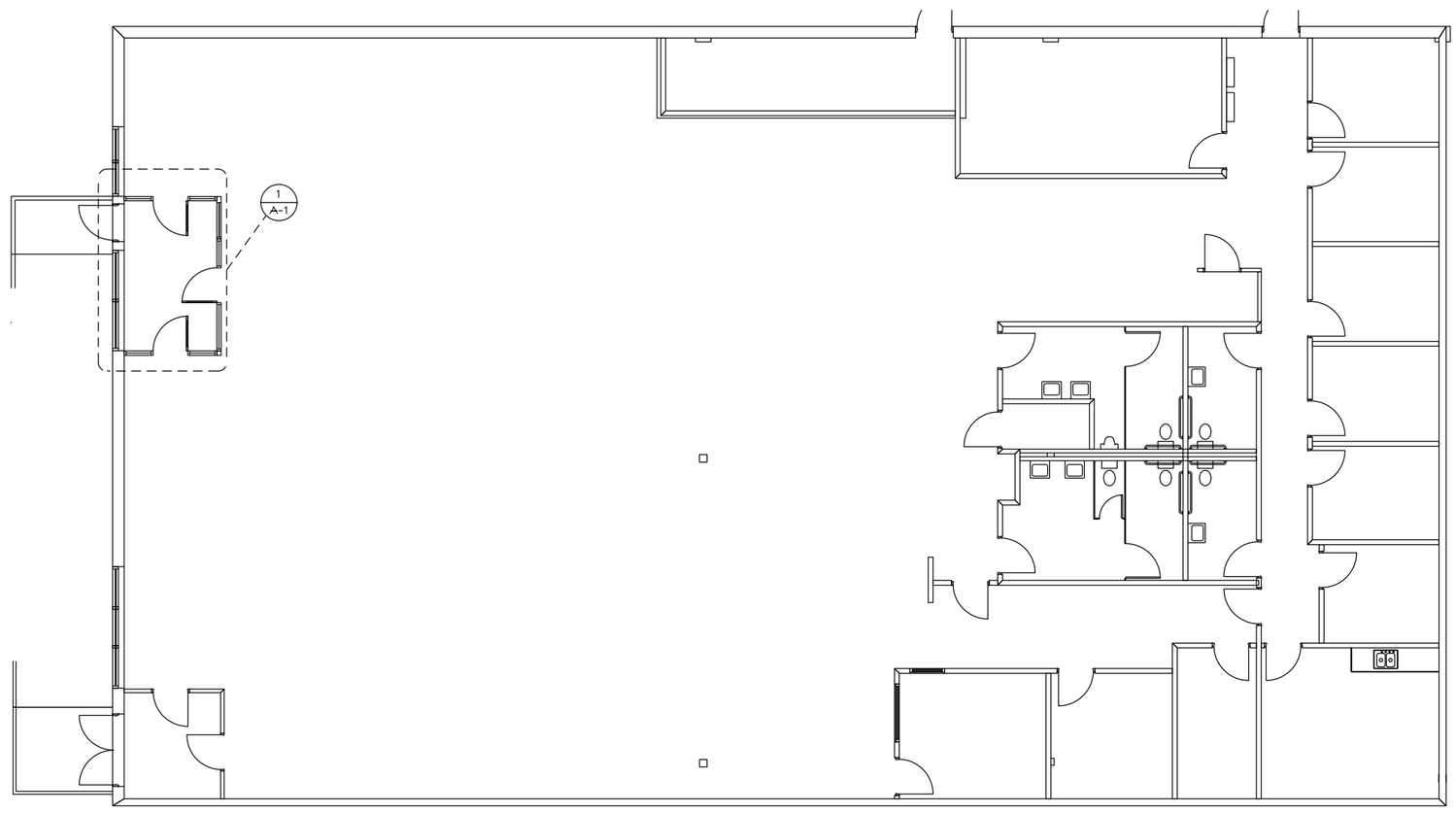

FLOOR PLAN

SCALE: 1/8"=1'-0"

DISTRICT: 06

COUNTY: SCOTT

PROJECT NUMBER: BG-3D20(001)—80-82

DAVENPORT, IOWA

DAVENPORT DL STATION VESTIBULE

FLOOR PLAN & ELEVATIONS

IOWA DOT
SMARTER & SIMPLER FOR CUSTOMER DRIVEN
OFFICE OF SUPPORT SERVICES
800 LINCOLN WAY
AMES, IOWA 50010 (515)239-1299

DATE: APRIL 2016

DRAWN BY: A SMELSER

APPROVED: J BURNES

REVISIONS:

01 SHEET OF 01

A-1