Coralville Brine Building

Project Address

2600 Coral Ridge Ave.
Coralville, IA 52241

CONSTRUCTION PLANS

Project: BG-4A32(000)-80-52

IOWA DOT
SMARTER I SIMPLER I CUSTOMER DRIVEN

OFFICE OF FACILITIES SUPPORT

800 LINCOLN WAY, AMES, IOWA 50010

INDEX OF DRAWINGS:

SHEET NO.		SHEET NAME
01	SP-1	BRINE BUILDING - SITE PLAN
02	BA-1	BRINE BUILDING - PLANS & ELEVATIONS
03	BA-2	BRINE BUILDING - WALL SECTION & DETAILS
04	BA-3	BRINE BUILDING - DETAILS
05	BMP-1	BRINE BUILDING - MECHANICAL & PLUMBING
06	BE-1	BRINE BUILDING - ELECTRICAL

STRUCTURAL WOOD

1. THE STABILITY OF THE STRUCTURE RELIES ON THE CONTRACTOR TO STRICTLY FOLLOW THE NAILING - PLYWOOD SHEATHING SCHEDULE.

2. ALL STRUCTURAL FRAMING MEMBERS TO BE DOUGLAS FIR-LARCH NO. 1

3. WOOD MEMBERS ARE DESIGNED UTILIZING THE FOLLOWING WOOD STRESSES:
   Fb = 1,000 PSI
   Ft (TENSION) = 675 PSI
   Fv (HORZ. SHEAR) = 180 PSI
   Fc (COMP. PERP.) = 625 PSI
   Fc (COMP. PARA.) = 1,500 PSI
   E (MOD. ELASTIC) = 1.7 X 10E6 PSI

4. CONVENTIONAL FRAMING DETAILS SHALL BE IN ACCORDANCE WITH SECTION 2308 OF THE 2012 INTERNATIONAL BUILDING CODE, INCLUDING NAILING SCHEDULES.

5. JOIST HANGERS, STRAPS, TIES, AND OTHER FRAMING CONNECTORS SHALL BE "SIMPSON" OR APPROVED EQUAL. CONNECTORS IN CONTACT WITH TREATED LUMBER SHALL BE HOT DIPPED GALVANIZED (G185) PER ASTM A653. FASTENERS IN CONTACT WITH TREATED LUMBER SHALL BE HOT DIPPED GALVANIZED PER ASTM A153 OR BE APPROVED FOR USE WITH TREATED LUMBER. ALL EXPOSED CONNECTORS ATTACHING ROOF TRUSSES TO WALLS IN THE BRINE BUILDING SHALL HAVE A PROTECTIVE COATING SYSTEM APPLIED AFTER TRUSS INSTALLATION. ROOF TRUSS MANUFACTURER SHALL SUBMIT PROTECTIVE COATING SYSTEM FOR REVIEW.

6. CUTTING, NOTCHING, OR DRILLING OF MEMBERS SHALL BE ONLY AS DETAILED OR APPROVED BY THE ENGINEER.

7. ALL EXTERIOR WOOD STUDS TO BE ONE PIECE CONTINUOUS, U.N.O.

8. ANCHOR BOLTS AT SILL PLATES: 5/8" DIA., HOT DIPPED GALVANIZED PER ASTM A153 OR APPROVED FOR USE WITH TREATED LUMBER, 6" EMBEDMENT, 2' O.C. MAXIMUM SPACING. EACH PIECE MUST HAVE A MINIMUM OF TWO BOLTS INSTALLED. ONE BOLT SHALL BE LOCATED NOT MORE THAN 12" OR LESS THAN 4" FROM EACH END OF EACH PIECE.

9. PROVIDE 2 X FRAMING AROUND ALL ROOF OPENINGS (U.N.O.)

10. ALL WOOD IN CONTACT WITH CONCRETE, MASONRY, OR EXPOSED TO THE EXTERIOR SHALL BE PRESERVATIVE TREATED.

11. PROVIDE GALVANIZED SIMPSON BEARING PLATES (MODEL LBPS5/8) AT ALL SILL PLATE ANCHORS. LOCATED EDGE OF PLATE WITHIN 1/2" OF EXTERIOR SHEATHED EDGE OF SILL PLATE.

12. WOOD ROOF TRUSSES WILL BE EXPOSED TO A CORROSIVE ENVIRONMENT IN THE BRINE BUILDING. TRUSS MANUFACTURER SHALL PROVIDE METAL CONNECTION PLATES COMPATIBLE WITH THIS ENVIRONMENT OR PROVIDE A PROTECTIVE COATING SYSTEM THAT CAN BE INSTALLED AFTER ROOF TRUSS INSTALLATION.

I hereby certify that the portion of this technical submission described below was prepared by me or under my direct supervision and responsible charge. I am a duly registered architect under the laws of the state of Iowa.

Jerry L. Burnes
Printed or typed name

Signature — Date
30 Jun 2016 — 30 Aug 2010
Registration expires — Date issued

Pages or sheets covered by this seal:

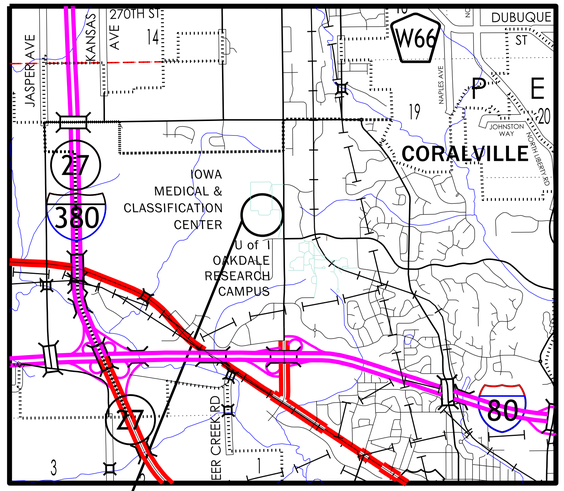

PROJECT LOCATION

NORTH

SHEET SIZE: 24 X 36

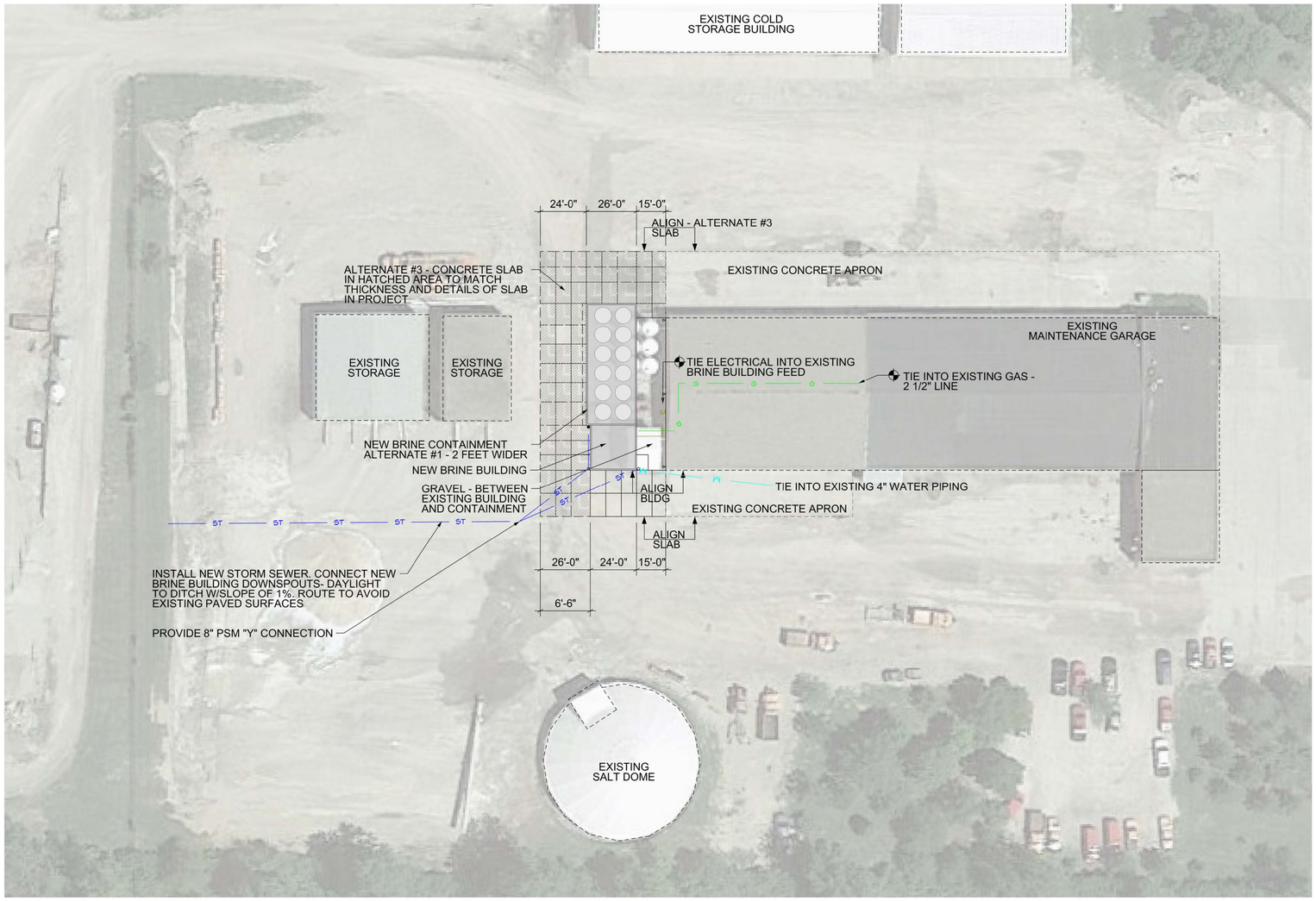

GENERAL NOTES:

1. CONTRACTOR TO CONTACT UTILITIES BEFORE STARTING EXCAVATION: IOWA ONE CALL 811
2. CONTRACTOR TO PROVIDE DOCUMENTATION OF MINIMUM 5 YEARS EXPERIENCE INCLUDING WORK ON SIMILAR PROJECTDT. DOCUMENTATION OF EXPERIENCE REQUIRED PRIOR TO BID AWARD.
3. CONTRACTOR IS RESPONSIBLE FOR FIELD VERIFYING ALL DIMENSIONS. IF THERE ARE DISCREPANCIES, CONTACT IOWA DOT - OFFICE OF SUPPORT SERVICES PRIOR TO BID
4. MAINTAIN AND PROTECT EXISTING BUILDINGS. REPAIR OR REPLACE DAMAGES AT GENERAL CONTRACTORS COST
5. PROVIDE 8" PVC VERTICAL CONNECTIONS 8" ABOVE SLAB TO DOWNSPOUTS W/ELBOWS TO CONNECT TO 8" PSM STORM SEWER PIPING
6. PROVIDE UNIVERSAL DOWNSPOUT CONNECTORS/COVERS TO CONNECT DOWNSPOUT TO PVC STORM WATER PIPING AT DOWNSPOUT LOCATIONS
7. PROVIDE METAL APRON END SECTION WITH ANIMAL GUARDS AT THE STORM WATER DAYLIGHTING TO DITCH.
8. PROVIDE POSITIVE DRAINAGE TO DITCH OF ABOUT 1%
9. PROVIDE CONTROL JOINTS IN SLAB AT 12' MAX SPACING. ALIGN WITH CORNERS. ALL JOINTS SHALL BE SEALED
10. ALL SITE WATER SERVICE PIPING MUST BE INSTALLED MINIMUM OF 60" BELOW GRADE TO TOP OF PIP

ALTERNATES:

#1 BRINE CONTAINMENT 2 FEET WIDER TO THE WEST

#2 ADDITIONAL PASSAGE DOOR ON THE WEST SIDE OF BRINE BUILDING INCLUDING CONCRETE STOOP AND EXIT LIGHT

#3 ADDITIONAL CONCRETE SLAB AND APPROACH (SHOWN IN GREY HATCH)

#4 ADDITIONAL LIGHTS ON EXISTING MAINTENANCE GARAGE

LEGEND

- W — WATER PIPING
- ST — NEW STORM SEWER PIPING
- POINT OF CONNECTION, NEW WORK TO EXISTING
- E — ELECTRIC
- G — GAS PIPING
- EXISTING TO REMAIN
- ALTERNATE
- NEW

SITE PLAN

SCALE: 1/32" = 1'-0"

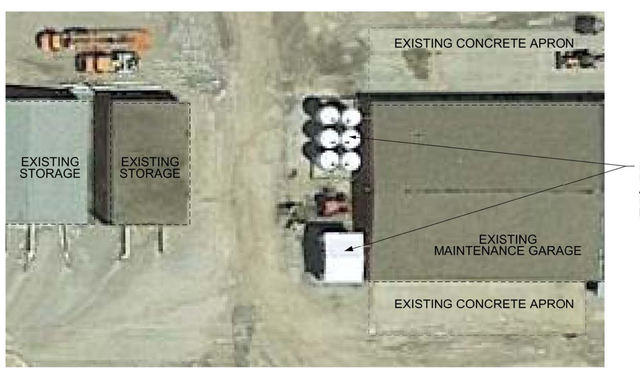

EXISTING BRINE MAKING AND STORING EQUIPMENT TO BE REMOVED BY OWNER. REMOVE EXISTING BRINE CONTAINMENT AND BUILDING. DISPOSE OF ALL EXISTING MATERIALS OFFSITE. PREPARE SITE FOR NEW CONSTRUCTION. SEE SPECS FOR MORE DETAILED INFORMATION.

DEMOLITION

SCALE: 1/32" = 1'-0"

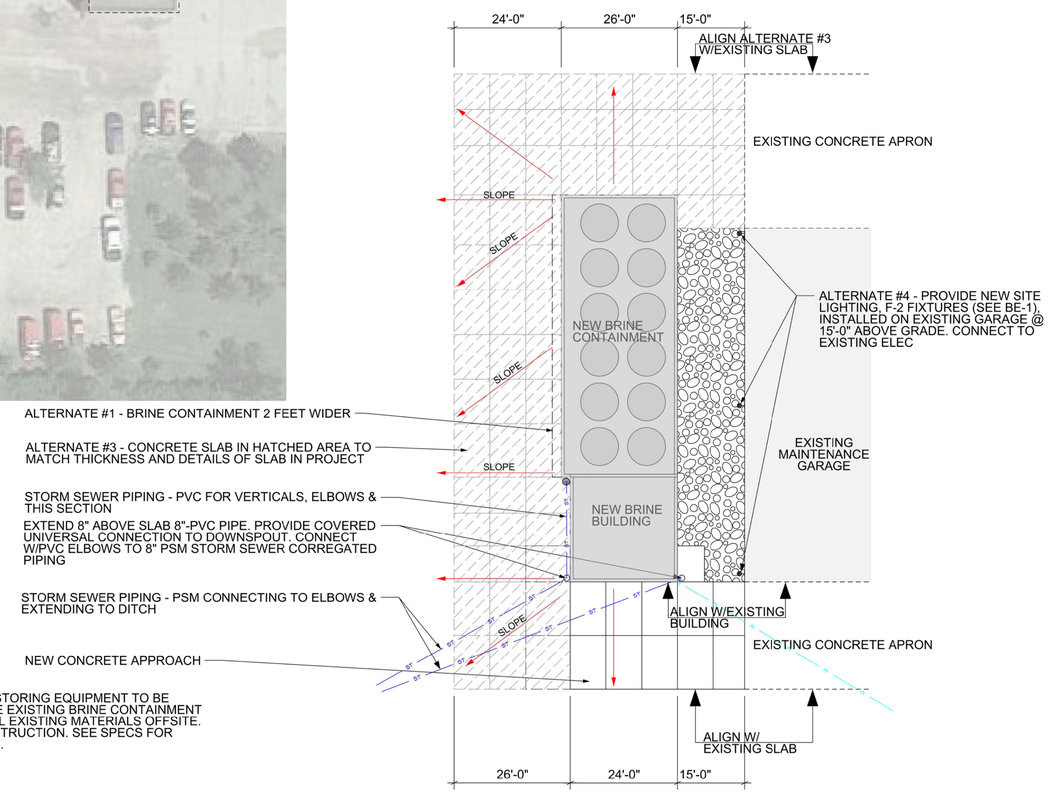

SITE DETAIL

SCALE: 1/32" = 1'-0"

DISTRICT: 06

COUNTY: JOHNSON

PROJECT NUMBER: BG-4A32(000)--80-52

CORALVILLE, IA

CORALVILLE BRINE BUILDING

SITE PLAN AND UTILITIES

IOWA DOT
SMARTER | SIMPLER | CUSTOMER DRIVEN
OFFICE OF SUPPORT SERVICES
800 LINCOLN WAY
AMES, IOWA 50010 (515)239-1299

DATE: MAR 17, 2016

DRAWN BY: DESIGN TEAM

APPROVED: J BURNES

REVISIONS:

1 SHEET OF 6

SP-1

SHEET SIZE: 24" X 36"

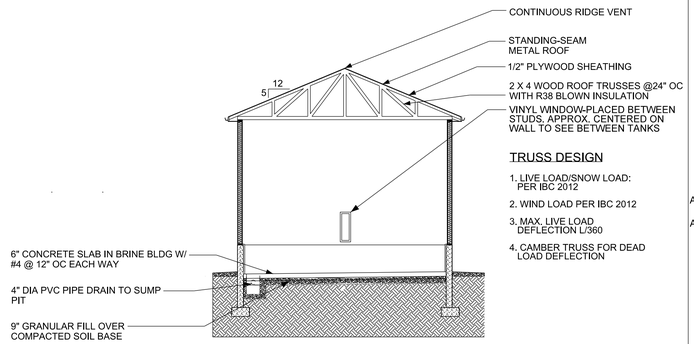

TRUSS DESIGN

1. LIVE LOAD/SNOW LOAD: PER IBC 2012
2. WIND LOAD PER IBC 2012
3. MAX. LIVE LOAD DEFLECTION L/360
4. CAMBER TRUSS FOR DEAD LOAD DEFLECTION

A / BA-1 SECTION A-A

SCALE: 1/8"=1'-0"

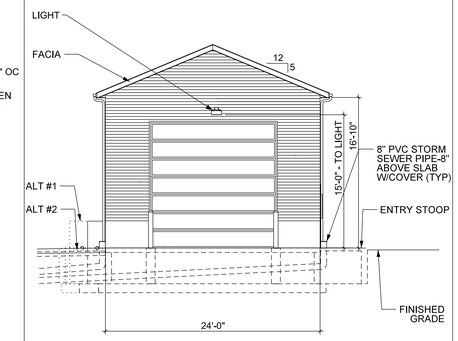

2 / BA-1 SOUTH ELEVATION

SCALE: 1/8"=1'-0"

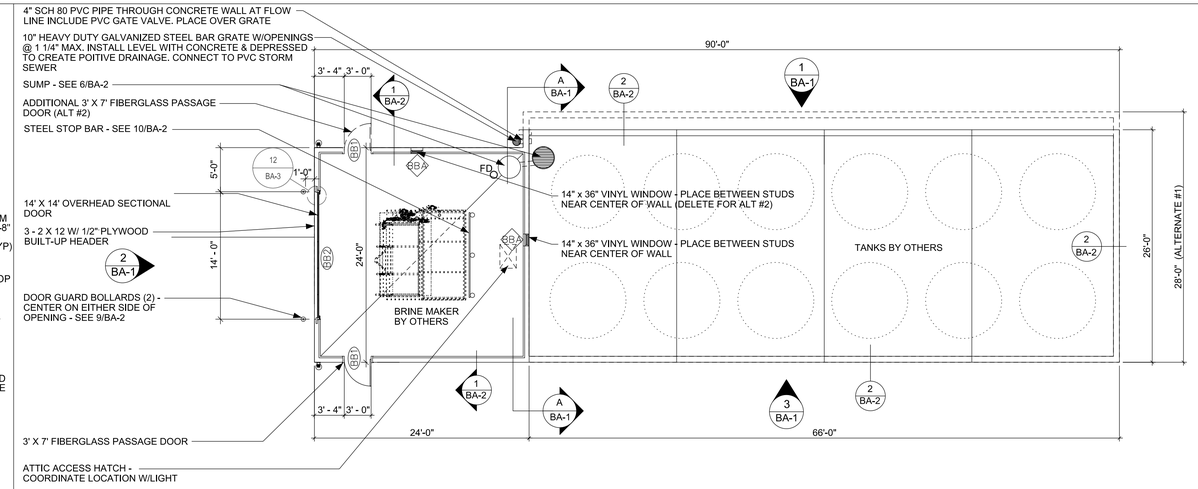

FLOOR PLAN

SCALE: 1/8"=1'-0"

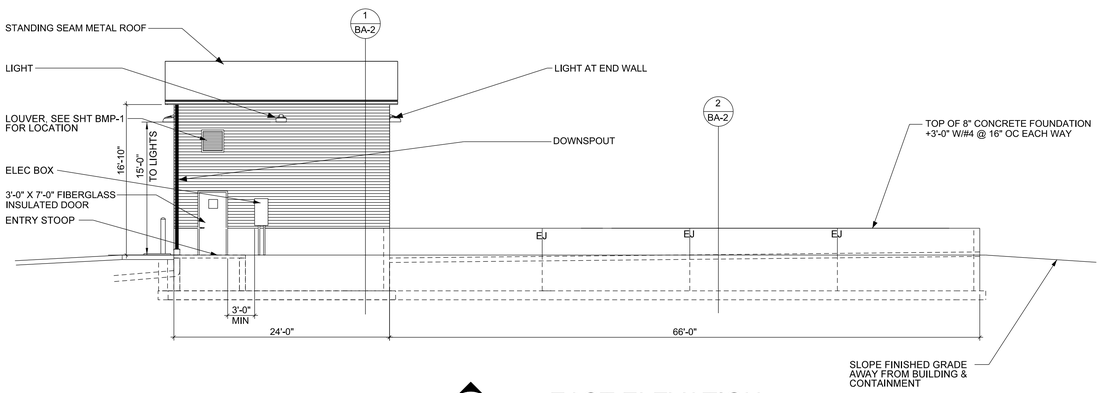

1 / BA-1 EAST ELEVATION

SCALE: 1/8"=1'-0"

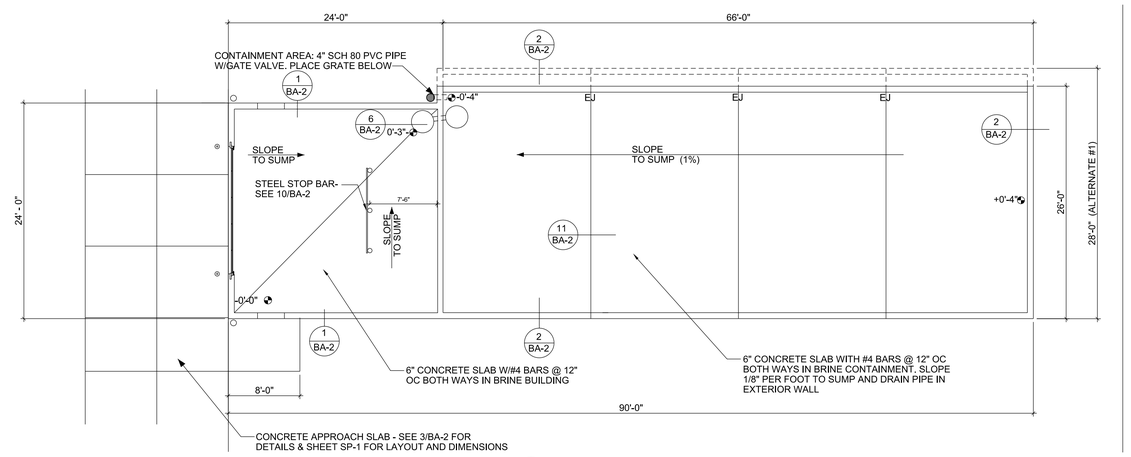

SLAB PLAN

SCALE: 1/8"=1'-0"

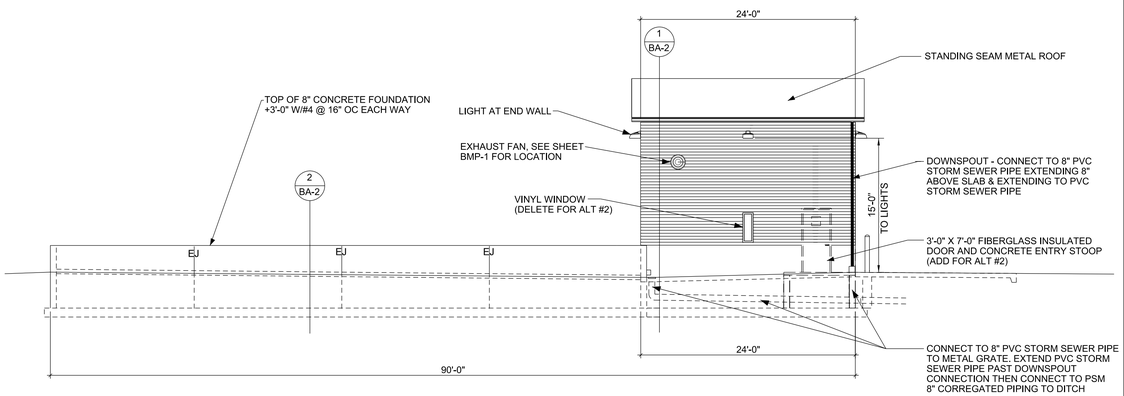

3 / BA-1 WEST ELEVATION

SCALE: 1/8"=1'-0"

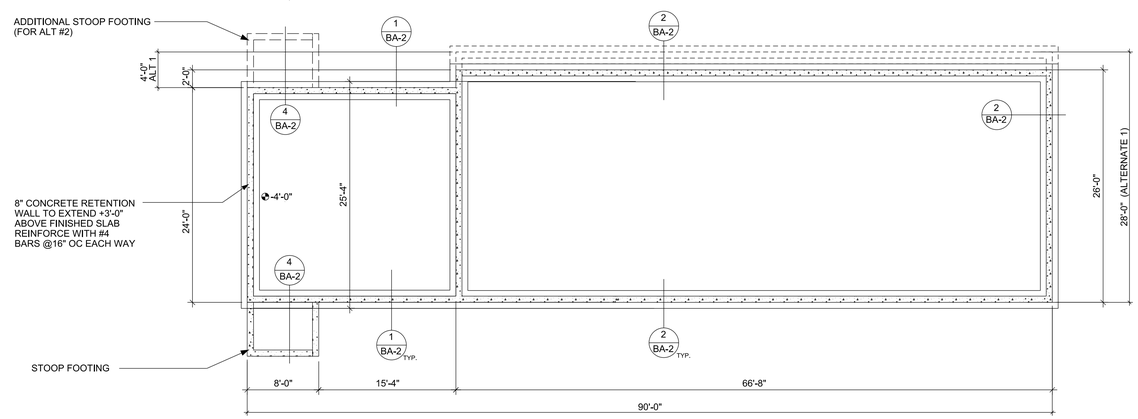

FOOTING PLAN

SCALE: 1/8"=1'-0"

DISTRICT: 06

COUNTY: JOHNSON

PROJECT NUMBER: BG-4A32(000)--80-52

CORALVILLE, IA

CORALVILLE BRINE BUILDING

BRINE BUILDING - PLANS & ELEVATIONS

IOWADOT
SMARTER | SIMPLER | CUSTOMER DRIVEN
OFFICE OF SUPPORT SERVICES
800 LINCOLN WAY
AMES, IOWA 50010 (515)239-1299

DATE: MAR 17, 2016

DRAWN BY: DESIGN TEAM

APPROVED: J BURNES

REVISIONS:

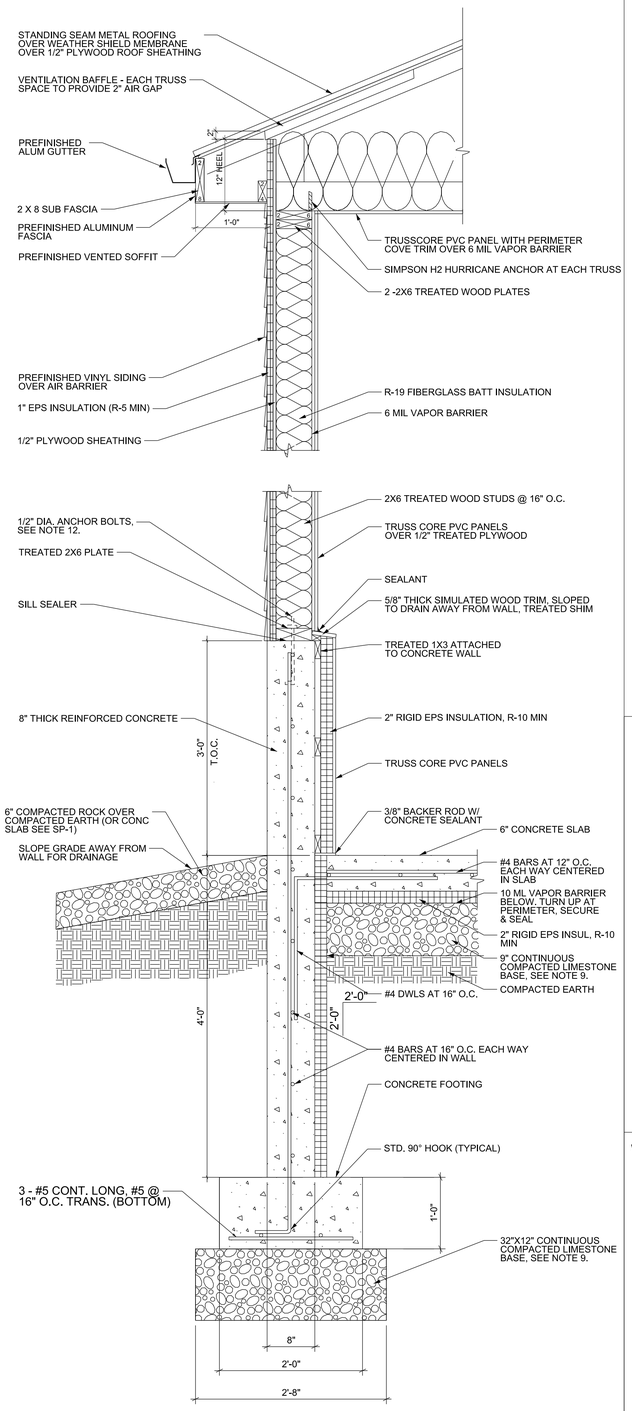

1 / BA-2 BRINE BUILDING WALL SECTION

SCALE: N.T.S

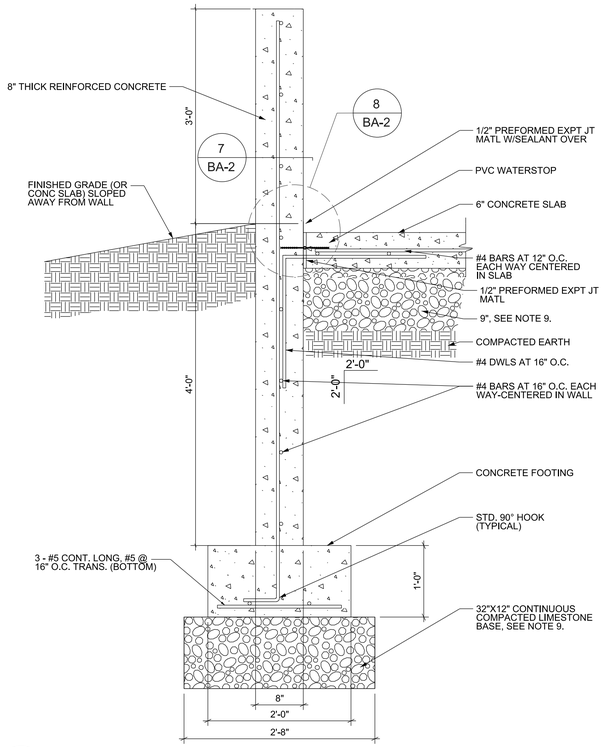

2 / BA-2 BRINE CONTAINMENT WALL SECTION

SCALE: N.T.S

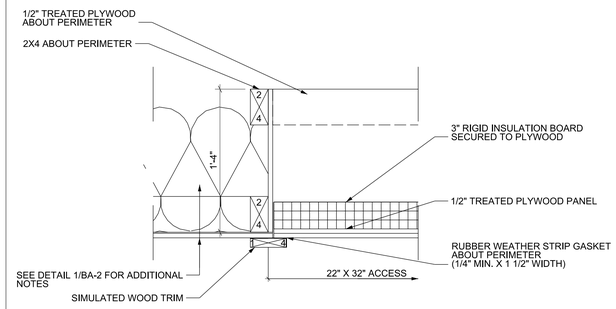

5 / BA-2 ATTIC ACCESS HATCH

SCALE: 1 1/2" = 1'-0"

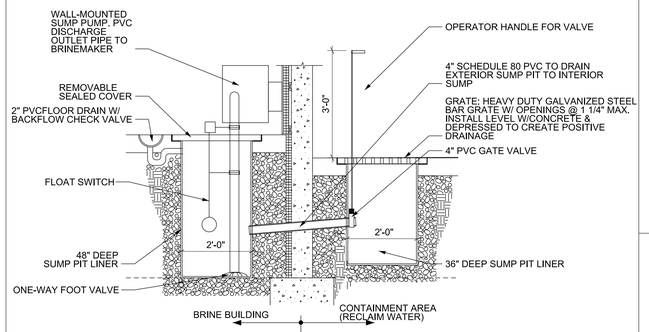

6 / BA-2 SUMP DRAIN DETAIL

SCALE: N.T.S.

NOTES:

1. THE LOCATION OF ALL AERIAL AND UNDER GROUND UTILITY LINES ARE APPROXIMATE OR MAY NOT BE INDICATED IN THESE PLANS. UNDERGROUND FACILITIES, WHEATHER INDICATED OR NOT, WILL BE LOCATED AND FLAGGED BY THE UTILITIES AT THE REQUEST OF THE CONTRACTOR. NO EXCAVATION WILL BE PERMITTED IN THE AREA UNTIL ALL SUCH UNDER GROUND UTILITIES HAVE BEEN LOCATED AND IDENTIFIED TO THE SATISFACTION OF ALL PARTIES AND THEN ONLY WITH EXTREME CARE TO AVOID ANY POSSIBILITY OF DAMAGE TO THE UTILITIES.
2. CALL FOR EXISTING UTILITY LOCATION STAKES A MINIMUM OF 48 HOURS PRIOR TO DIGGING.
3. HAUL ALL DEBRIS RESULTING FROM CONSTRUCTION OPERATIONS OFF-SITE AND DISPOSE OF PROPERLY.
4. FURNISH AND MAINTAIN ALL NECESARY BARRICADES, WARNINGS SIGNS, LIGHTS AND FLAGMEN AS NECESARY FOR CONSTRUCTION OPERATIONS.
5. PROTECT BY WHATEVER MEANS REQUIRED ALL FENCES, SIGNS, STRUCTURES, UTILITIES, STREETS, BUSHES, TREES, ETC, WHICH ARE NOT DESIGNED FOR REMOVAL; OR ARE OUTSIDE THE LIMITS OF CONSTRUCTION.
6. PROVIDE POSITIVE DRAINAGE AT ALL TIMES WITHIN THE CONSTRUCTION AREA. DO NOT ALLOW WATER TO POND IN EXCAVATION AREAS, AND MAINTAIN ALL EXISTING DRAINAGE PATTERNS.
7. CONTRACTOR TO REMOVE ALL TOP SOIL.
8. EXCAVATE AND RECOMPACT TO 90% PROCTER THE TOP 2'-0" PLUS ANY ADDITIONAL CLASS 10 FILL NEEDED TO FINISH THE BUILDING PAD
9. USE 1" CRUSHED LIMESTONE FILL - DEPTH UNDER SLAB TO BE 9" & DEPTH UNDER FOOTINGS TO BE 12"
10. CONTRACTOR TO PROVIDE FOR LOAD TRANSFER BETWEEN SAWCUT SLAB AREAS, 1 1/4" DIA X 18" GREASED STEEL DOWELS @ 12" CENTERS PLACED AT MID-DEPTH OF SLAB (DOWEL BASKET ASSEMBLY LIKE THOSE COMMONLY USED FOR HIGHWAY PAVEMENT JOINTS)
11. WITHIN INDVIDUAL SLAB AREAS, PROVIDE ONE MAT OF REBAR CONSISTING OF #4 DIA X 12" OC IN EACH DIRECTION TO BE CHAIRED 3" FROM THE TOP OF SLAB. THE REBAR MAT IS TO BE DISCONTINUOUS AT THE JOINTS
12. CONCRETE CONTRACTOR TO INSTALL 1/2" X 1'-0" ANCHOR BOLTS - HOT DIPPED GALVANIZED PER ASTM A153 OR APPROVED FOR USE W/TREATED LUMBER, IN TOP OF KNEE WALLS @ 6" EMBEDMENT. 2'-0" O.C. MAXIMUM SPACING, AND WITHIN 4" TO 12" OF EACH OPENING AND CORNERS. MINIMUM OF TWO BOLTS INSTALLED PER PIECE.
13. CONTRACTOR TO INSTALL 2-2" CONDUITS FROM MAINTENANCE GARAGE UTILITY ROOM TO BRINE BUILDING PANEL. SEE ELECTRICAL PLAN SHEET BE-1. COORDINATE W/OWNER
14. APPLY SEALANT TO ALL EXPOSED CONCRETE PER SPEC SECTION 03 3000 - INCLUDING ALL VERTICAL, HORIZONTAL, INTERIOR & EXTERIOR EXPOSED CONCRETE

SLAB ON GRADE DETAILS
BRINE MAKER ROOM THICKNESS = 6"
BRINE CONTAINMENT THICKNESS = 6"
MIN CONCRETE COMPRESSIVE STRENGTH, F'C= 4000 PSI
SEE SLAB PLAN/BA-1 FOR SLAB JOINT SPACING
#4 REBAR @ 12" OC BOTH WAYS

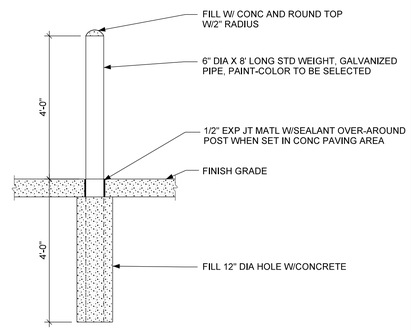

9 / BA-2 BOLLARD DETAIL

SCALE: N.T.S.

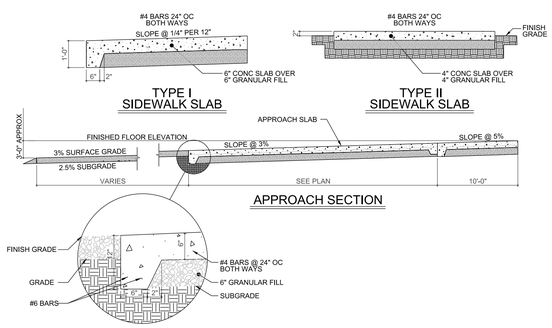

3 / BA-2 PERIMETER GRADE BEAM DETAIL

SCALE: N.T.S

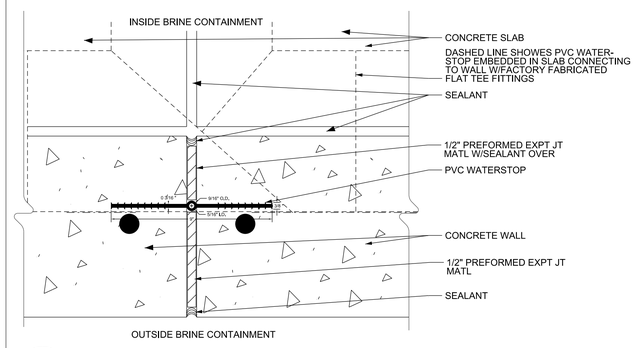

7 / BA-2 EJ @ CONTAINMENT WALL

SCALE: N.T.S

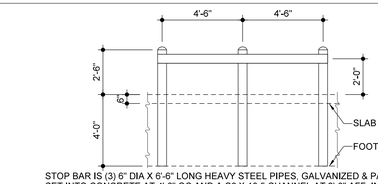

STOP BAR IS (3) 6" DIA X 6'-6" LONG HEAVY STEEL PIPES, GALVANIZED & PAINTED, SET INTO CONCRETE AT 4'-6" OC AND A C6 X 10.5 CHANNEL AT 2'-0" AFF. INSTALL 1/2" EXP JT MATL AROUND POST W/SEALANT OVER. FILL PIPES W/CONCRETE. ROUND TOPS W/2" RADIUS

10 / BA-2 POST & GUARD RAIL

SCALE: 1/4" = 1'-0"

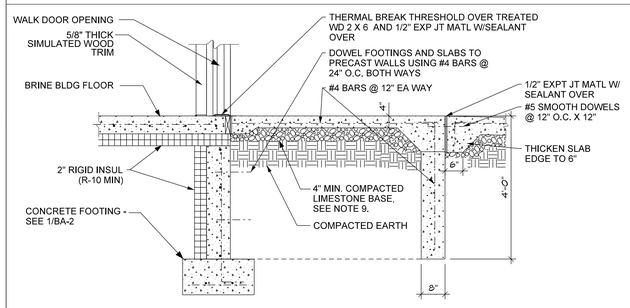

4 / BA-2 STOOP FOOTING AND SLAB

SCALE: N.T.S

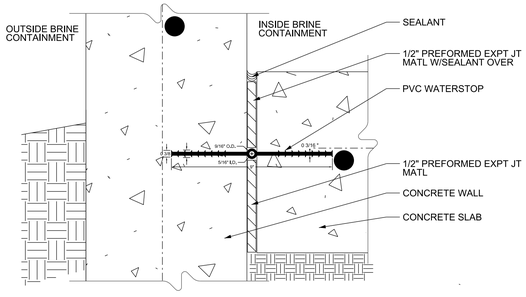

8 / BA-2 EJ - CONTAINMENT SLAB TO WALL

SCALE: N.T.S

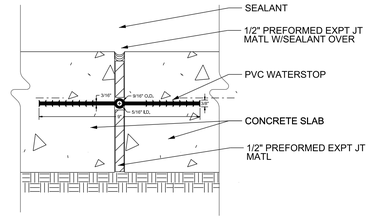

11 / BA-2 EJ @ CONTAINMENT SLAB

SCALE: NTS

DISTRICT: 06

COUNTY: JOHNSON

PROJECT NUMBER: BG-4A32(000)--80-52

CORALVILLE, IA

CORALVILLE BRINE BUILDING

BRINE BUILDING - WALL SECTION & DETAILS

IOWA DOT
SMARTER | SIMPLER | CUSTOMER DRIVEN
OFFICE OF SUPPORT SERVICES
800 LINCOLN WAY
AMES, IOWA 50010 (515)239-1299

DATE: MAR 17, 2016

DRAWN BY: DESIGN TEAM

APPROVED: J BURNES

REVISIONS:

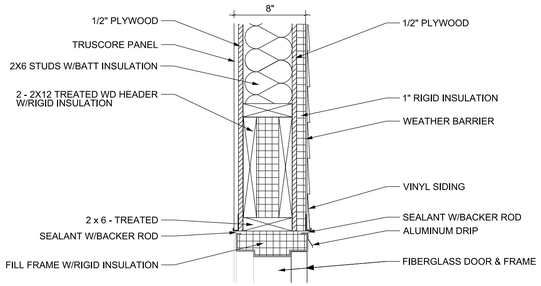

1 BA-3 DOOR HEADER DETAIL
SCALE: 1" = 1'-0"

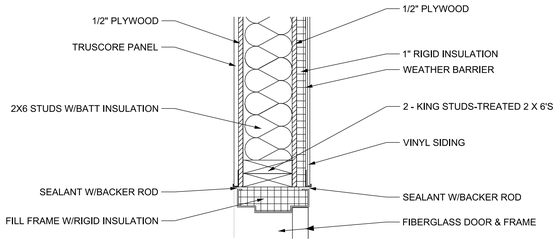

2 BA-3 DOOR JAMB DETAIL - AT WALL FRAMING
SCALE: 1" = 1'-0"

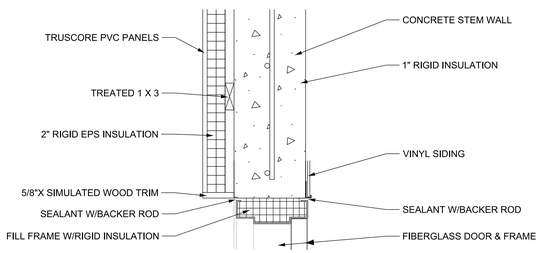

3 BA-3 DOOR JAMB DETAIL-@ CONC. STEM WALL
SCALE: 1"=1'-0"

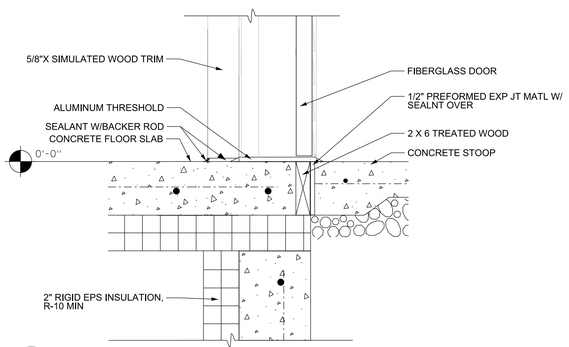

4 BA-3 DOOR THRESHOLD DETAIL
SCALE: 1" = 1'-0"

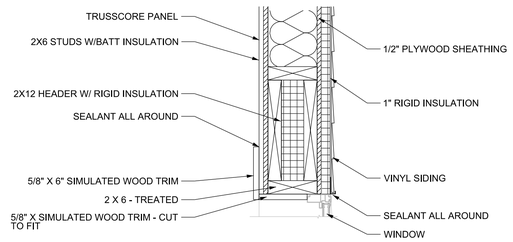

5 BA-3 WINDOW HEADER DETAIL
SCALE: 1" = 1'-0"

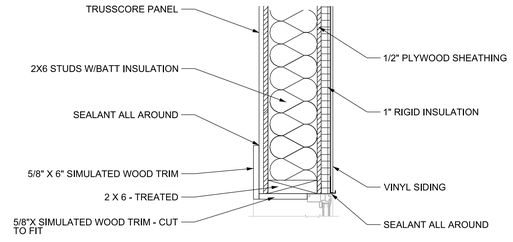

6 BA-3 WINDOW JAMB DETAIL
SCALE: 1" = 1'-0"

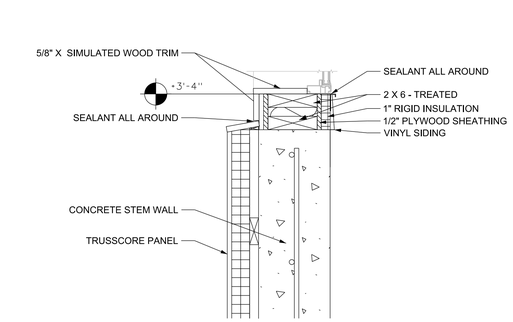

7 BA-3 WINDOW SILL DETAIL
SCALE: 1" = 1'-0"

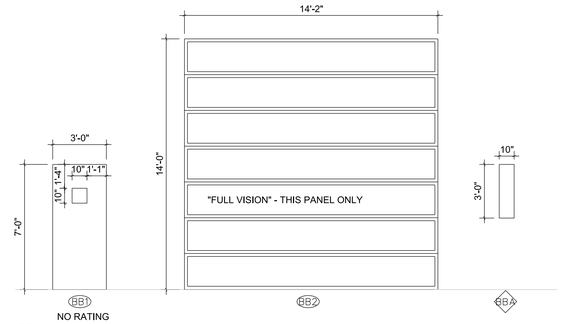

9 BA-3 DOOR & WINDOW TYPES
SCALE: N.T.S

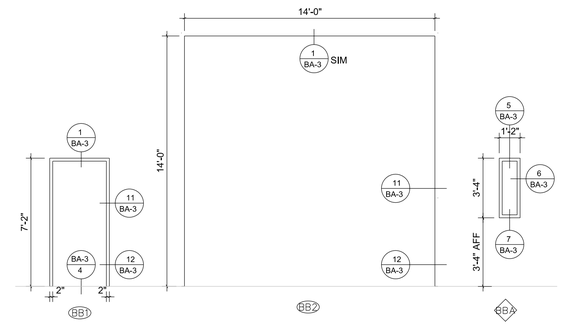

10 BA-3 FRAME TYPES
SCALE: N.T.S

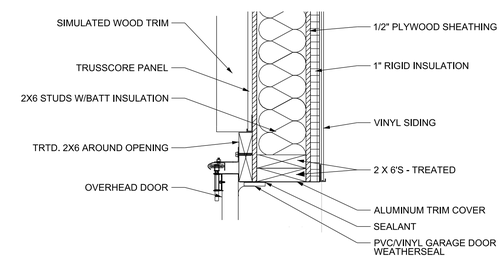

11 BA-3 OVERHEAD DOOR JAMB DETAIL
SCALE: 1" = 1'-0"

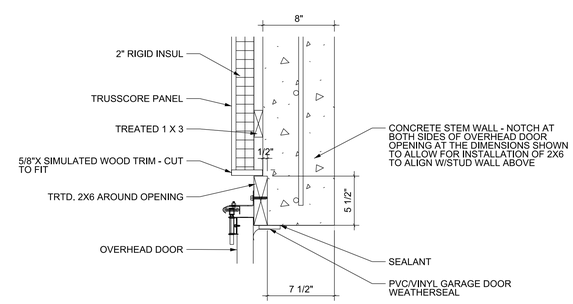

12 BA-3 OVERHEAD DOOR JAMB DETAIL
SCALE: 1" = 1'-0"

13 BA-3 NOT USED
SCALE: N.T.S

14 BA-3 NOT USED
SCALE: N.T.S

15 BA-3 NOT USED
SCALE: N.T.S

16 BA-3 NOT USED
SCALE: N.T.S

8 BA-3 NOT USED
SCALE: N.T.S

DISTRICT: 06
COUNTY: JOHNSON
PROJECT NUMBER: BG-4A32(000)--80-52

CORALVILLE, IA

CORALVILLE BRINE BUILDING

BRINE BUILDING - DETAILS

IOWA DOT
SMARTER I SIMPLER I CUSTOMER DRIVEN
OFFICE OF SUPPORT SERVICES
800 LINCOLN WAY
AMES, IOWA 50010 (515)239-1289

DATE: MAR 06, 2016
DRAWN BY: DESIGN TEAM
APPROVED: J BURNES
REVISIONS:

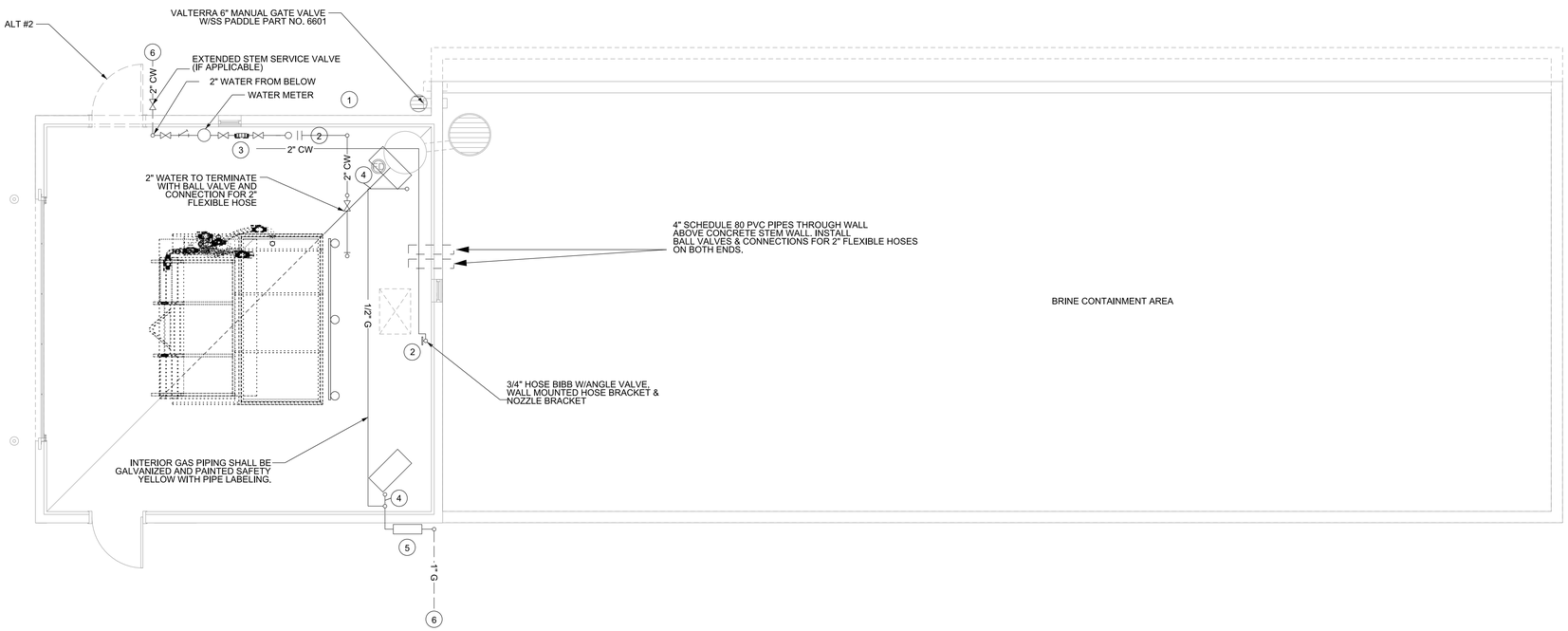

NORTH

MECHANICAL PLAN

SCALE: 1/4"=1'-0"

MECHANICAL GENERAL NOTES:

1. DRAWINGS SHOWING LOCATION OF FIXTURES, EQUIPMENT, DUCTWORK, PIPING, ETC AND MAY NOT ALWAYS REFLECT ACTUAL INSTALLATION CONDITIONS. DRAWINGS SHOW THE GENERAL ARRANGEMENT OF ALL PIPING, DUCTWORK, EQUIPMENT, ETC. AND MAY NOT INCLUDE ALL OFFSETS AND FITTINGS, AS REQUIRED. THE DRAWINGS SHALL BE FOLLOWED AS CLOSELY AS ACTUAL BUILDING CONSTRUCTION AND THE WORK OF OTHERS WILL PERMIT.
2. VERIFY SIZE AND LOCATION OF EXISTING PIPING AND EQUIPMENT AS IT RELATES TO NEW WORK
3. PLUMBING CONTRACTOR SHALL COORDINATE ALL PLUMBING PIPING WITH ALL DUCTWORK AND OTHER TRADES PRIOR TO COMMENCMENT OF WORK.
4. FURNISH AND INSTALL MECHANICAL PRODUCTS IN COMPLIANCE WITH LOCAL BUILDING CODE AND THE AUTHORITY HAVING JURISDICTION, AND IN ACCORDANCE WITH GENERALLY ACCEPTED INDUSTRY STANDARDS AND PRACTICES AND MANUFACTURER'S RECOMMENDATIONS.
5. VERIFY ACTUAL LOCATIONS OF FIXTURES AND DRAINS WITH ARCHITECTURAL.
6. FIRE CAULK ALL MECHANICAL PENETRATIONS AT FIRE RATED WALLS.

KEY NOTES:

1. WATER METER, PROVIDED BY UTILITY PROVIDER AND INSTALLED BY CONTRACTOR.
2. HOSE BIBB, CHICAGO 387 - LEFE 27
3. BACKFLOW PREVENTOR, 2" WATTS 009QT, REDUCED PRESSURE ZONES
4. 1/2" GAS TO UNIT HEATER
5. NATURAL GAS CONNECTION INSTALLED BY CONTRACTOR.
6. BUILDING SERVICES TO BRINE BUILDING. INSTALLED BY CONTRACTOR

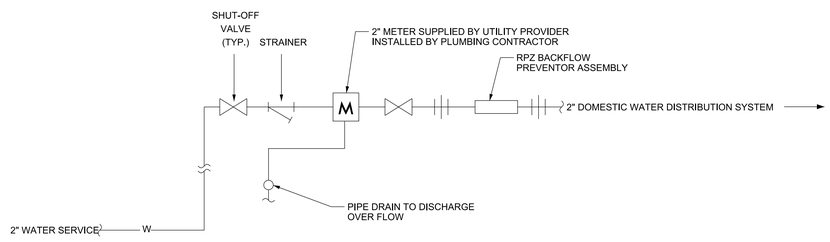

DOMESTIC WATER SERVICE DETAIL

N.T.S.

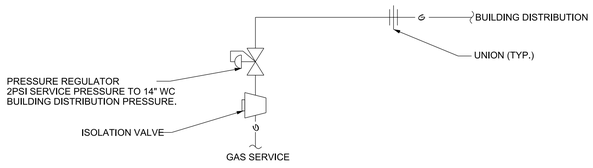

TIE INTO EXISTING GAS SERVICE IN MAINTENANCE GARAGE

NATURAL GAS SERVICE DETAIL

N.T.S.

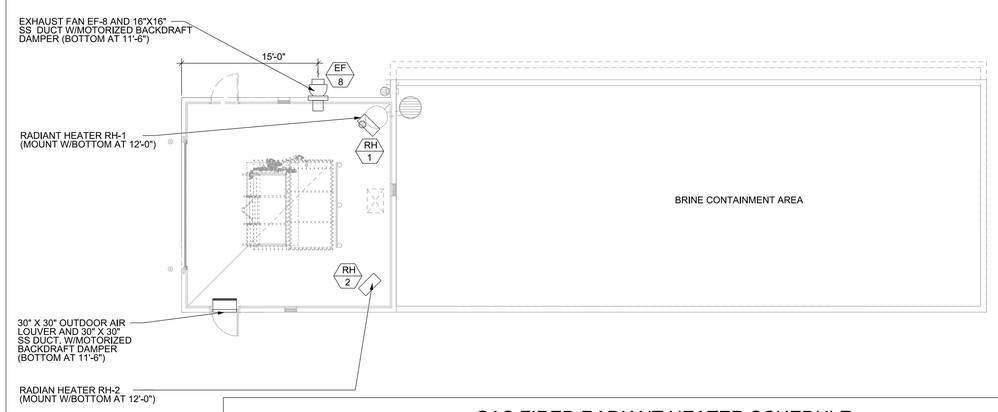

GAS FIRED RADIANT HEATER SCHEDULE

DESIGNATION	MANUFACTURER	MODEL	LOCATION	OUTPUT (BTU/HR)	RADIANT SURFACE (IN^2)	VOLTAGE/PHASE	WATTS	REMARKS
RH-1	RE-VERBER-RAY	DR-30	BRINE	30,000	85	120/1	500	
RH-2	RE-VERBER-RAY	DR-30	BRINE	30,000	85	120/1	500	

FAN SCHEDULE

DESIGNATION	SERVES	MANUFACTURER	MODEL	CFM	ESP	RPM	DRIVE	MOTOR HP	VOLTS	PHASE	REMARKS
EF-8	BRINE BUILDING	GREENHECK	CWB-121-4	1150	0.125	1750	BELT	1/4	120	1	1, 2

REMARKS
1. PROVIDE NEMA 4X DISCONNECT
2. COATED WITH HI-PRO POLYESTER, DARK GRAY (041), STAINLESS STEEL SHAFT, GALVANIZED BIRD SCREEN, MOTOR WITH THERM OVERLOAD.

NORTH

MECH. HVAC PLAN

SCALE: 1/4"=1'-0"

DISTRICT: 06

COUNTY: JOHNSON

PROJECT NUMBER: BG-4A32(000)--80-52

CORALVILLE, IA

CORALVILLE BRINE BUILDING

BRINE BUILDING - MECHANICAL & PLUMBING

IOWA DOT
SMARTER | SIMPLER | CUSTOMER DRIVEN
OFFICE OF SUPPORT SERVICES
800 LINCOLN WAY
AMES, IOWA 50010 (515)239-1299

DATE: MAR 17, 2016

DRAWN BY: DESIGN TEAM

APPROVED: J BURNES

REVISIONS:

BMP-1

PANEL G (BRINE BUILDING)										
SHORT CIRCUIT RATING: 22,00 AMPS INSTALLATION: SURFACE, NEMA 4X SIZE OF MAIN: 200 AMP			TIE INTO BRINE BUILDING FEED						MAIN BREAKER: 200 AMP 240/120 VOLTS 1 PHASE, 4 WIRE	
	DISCRIPTION	PHASE WIRES, GND CONDUIT SIZE	LOAD (VA)	BKR	P H	BKR	LOAD (VA)	PHASE WIRES, GND CONDUIT SIZE	DISCRIPTION	
1	RH-1,2	(2)-#12, #12, 3/4"	1000	1P-20A	A	2P-50A GF	6400	(2)-#8, #8, 3/4"	BRINE MAKER	2
3	OHD	(2)-#12, #12, 3/4"	1200	1P-20A	B					4
5	EF-8 & MD	(2)-#12, #12, 3/4"	1200	1P-20A	C	2P-50A GF	6400	(2)-#8, #8, 3/4"	LOAD OUT PUMP 1	6
7	RECEPT	(2)-#12, #12, 3/4"	720	1P-20A GF	A					8
9	RECEPT	(2)-#12, #12, 3/4"	900	1P-20A GF	B	2P-50A GF	6400	(2)-#8, #8, 3/4"	LOAD OUT PUMP 2	10
11	LIGHTING	(2)-#12, #12, 3/4"	500	1P-20A	C					12
13	FAN RECEPT	(2)-#12, #12, 3/4"	360	1P-20A	A	2P-50A GF	6400	(2)-#8, #8, 3/4"	LOAD OUT PUMP 3	14
15	SUMP PUMP	(2)-#12, #12, 3/4"	-	1P-20 GF	B					16
17	SPARE	-	-	1P-20A	C	2P-50A GF	6400	(2)-#8, #8, 3/4"	FUTURE PUMP	18
19	SPARE	-	-	1P-20A	A					20
21	SPARE	-	-	1P-20A	B	1P-20A		-	SPARE	22
23	SPARE	-	-	1P-20A	C	1P-20A		-	SPARE	24
25					A					26
27	SPD	(4)-#6, #8, 1-1/4"C	NA	3P-60A	B					28
29					C					30

LIGHTING FIXTURE SCHEDULE							
TYPE	MANUFACTURER & MODEL NUMBER	NOMINAL DIMENSIONS	LAMPS	VOLT	DRIVER	POWER	APPROVED EQUALS
F1 - SEE NOTE 4.	~~AZZ INC. RIG-A-LITE FPF-14L-8-4-U-SS~~	~~100"L X 6.75" DIA~~	~~4000K 12,800 LM~~	~~120-277~~	~~ELECTRONIC DRIVER~~	~~144W LED~~	~~PRECISION-PARAGON SNL SERIES~~
F2	LITHONIA WST LED-2-10A700/40K SR2-MVOLT-PE-DBLXD	9-1/8"W x 14-1/4"L x 11-3/8"D	4000K 4000 LM	120-277	ELECTRONIC DRIVER	47W	PHILIPS-GARDCO 101 SERIES OR SPAULDING-TRP SERIES
X1	AZZ - RIG-A-LIGHT - R-A-L: CATALOG#: CEX-L-1-R-W-DT-EM WALL MOUNT KIT:CEXWMKT	9-1/4"H x 13-1/4"W x 3 1/2"D	RED LEDS & (2) - 12V, 4W LED LAMP HEADS	120-277	NA	2.5W	LIGHTALARMS XVEHZ

GENERAL NOTES:

1. ELECTRICAL ENTITIES DRAWN WITH THIS LINETYPE (——) INDICATES EXISTING TO REMAIN UNLESS OTHERWISE NOTED.
2. ELECTRICAL ENTITIES DRAWN WITH THIS LINETYPE (——) INDICATES NEW TO REMAIN UNLESS OTHERWISE NOTED.
3. ALL WORK REQUIRING THE SHUTDOWN OF SITE UTILITIES MUST BE COORDINATED WITH THE OWNER 72 HOURS IN ADVANCE
4. LIGHT TYPE F1 SUPPLIED BY IOWA DOT. CONTRACTOR TO INSTALL
5. ELECTRICAL ENTITIES DRAWN WITH THIS LINETYPE (— —) INDICATES ALTERNATE UNLESS OTHERWISE NOTED.

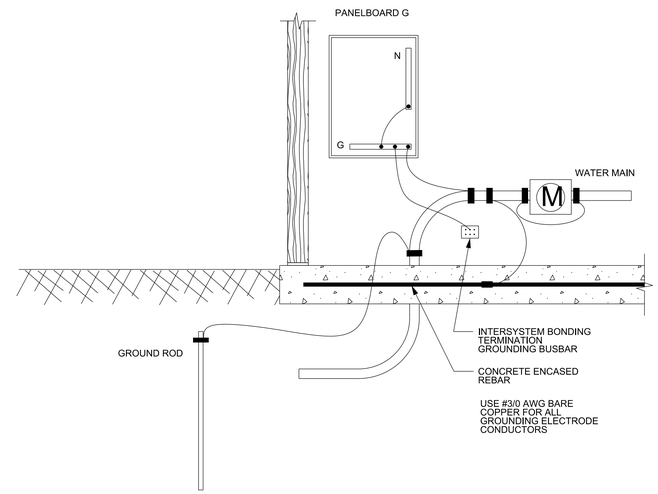

BRINE BUILDING GROUNDING ELECTRODE SYSTEM

SCALE: N.T.S.

KEY NOTES:

1. LINE VOLTAGE THERMOSTAT FOR RADIANT HEATERS. SIMILAR AND EQUAL TO PECO TF115-001 WITH NEMA 4X ENCLOSURE AND STAINLESS STEEL SENSING ELEMENTS FOR WET AND CORROSIVE ENVIRONMENT.
2. NEMA 4X ENCLOSURE WITH PUSH BUTTON AND TIMER RELAY (SIMILAR AND EQUAL TO SQUARE D 9050JCX29U20 WITH CLASS 8501 SOCKET) FOR 2-HOUR DELAY OFF FUNCTION. CIRCUIT TO MOTOR OPERATED DAMPERS (TWO) AND EXHAUST FAN. LOCATE PUSH BOTTON ADJACENT TO LIGHT SWITCH.
3. PANELBOARD G. REFERENCE GROUNDING AND BONDING DETAIL. PROVIDE TYPE 2 SPD IN NEMA 4X CABINET. LOCATE PUSH BUTTON ADJACENT TO LIGHT SWITCH.
4. FUSED DISCONNECT SWITCH: 240VAC, 1-PHASE, 2-WIRE, NEMA 4X, 60A FUSED AT 35A. PROVIDE 3/4" SEALITE CONNECTION FROM DISCONNECT TO MOTOR. COORDINATE EXACT LOCATION WITH OWNER.
5. LOAD OUT PUMP PRIMING SWITCH. PROVIDE NEMA 4XSWITCH ENCLOSURE WITH 3/4" PVC CONDUIT TO PUMP CONTROLLER. SWITCH AND WIRING PROVIDED BY OWNER.
6. LOAD OUT PUMP OUTPUT SWITCH. PROVIDE NEMA 4X SWITCH ENCLOSURE WITH 3/4" PVC CONDUIT TO PUMP CONTROLLER. PROVIDE (2) LENGTHS OF PVC-COATED UNISTRUT, FIRMLY SECURED TO CONTAINMENT WALL TO MOUNT SWITCH AT SPECIFIED HEIGHT, SWITCH AND WIRING PROVIDED BY OWNER.
7. SITE LIGHTING (240VAC, 20A, 1-PHASE, 2-WIRE, NEMA 4X) AND OVERRIDE SWITCH (240VAC, 20A, 1-PHASE, 2-WIRE, NEMA 4X)
8. EXTERIOR WALL MOUNTED PHOTOCELL. CIRCUIT TO SITE LIGHTING POWER PACK.
9. RADIANT HEATING BURNER CONNECTION. CONNECT TO CORRESPONDING LINE VOLTAGE THERMOSTAT (NOTE 1). PROVIDE NEMA 5L-20P CORD CAP AND WATERTIGHT NEMA 5L-20R RECEPTACLE.
10. OVERHEAD DOOR OPERATOR. POWER AND CONTROL WIRING BY CONTRACTOR. CIRCUIT POWER AS INDICATED AND WIRE OPEN-STOP-CLOSE CONTROLS & SAFETY DEVICES PER MANUFACTURERS INSTRUCTIONS.
11. COMMUNICATIONS JUNCTION BOX PROVIDE 12" X 12" X 4" NEMA 4X BOX WITH HINGED COVER.
12. PROVIDE NEW 240/120VAC, 1 PHASE, 4 WIRE, 200A ELECTRIC SERVICE TO BRINE BUILDING. COORDINATE WITH THE OWNER. SEE SHEET SP-1 FOR ADDITIONAL INFORMATION
13. SPEAKER J-BOX, PROVIDE NEMA 4X, 6" x 6" x 4" J-BOX AT 10'-0" AFF AND 1" CONDUIT ROUTED BACK TO COMMUNICATIONS JUNCTION BOX BY CONTRACTOR. COORDINATE EXACT LOCATION WITH OWNER. SPEAKER AND ASSOCIATED WIRING PROVIDED BY OWNER.
14. RW PUMP PRIMING SWITCH, NEMA 4X SWITCH ENCLOSURE WITH 3/4" PVC CONDUIT TO PUMP CONTROLLER.

ELECTRICAL LEGEND:

- MOTOR
- PENDANT LIGHTING FIXTURE -
- EXTERIOR WALL PACK LIGHTING FIXTURE
- WALL (FLUSH) MOUNTED, SINGLE FACE EXIT SIGN
- SINGLE POLE SWITCH
- M MOTOR SWITCH
- DOOR OPENER SWITCH
- PC PHOTOCELL
- FUSED DISCONNECT SWITCH
- THERMOSTAT - WALL MOUNTED
- SINGLE RECEPTACLE - WALL MOUNTED
- DUPLEX RECEPTACLE - WALL MOUNTED
- QUADRAPLEX RECEPTACLE - WALL MOUNTED
- SPECIAL EQUIPMENT CONNECTION - CEILING OR SURFACE MOUNTED
- JUNCTION BOX - WALL MOUNTED
- MD MOTOR DAMPER
- ELECTRICAL PANELBOARD
- DE-HUMIDISTAT W/MANUAL SWITCH OVERRIDE MOUNT @ 60" AFF
- 3 THREE WAY SWITCH (ALT #2)

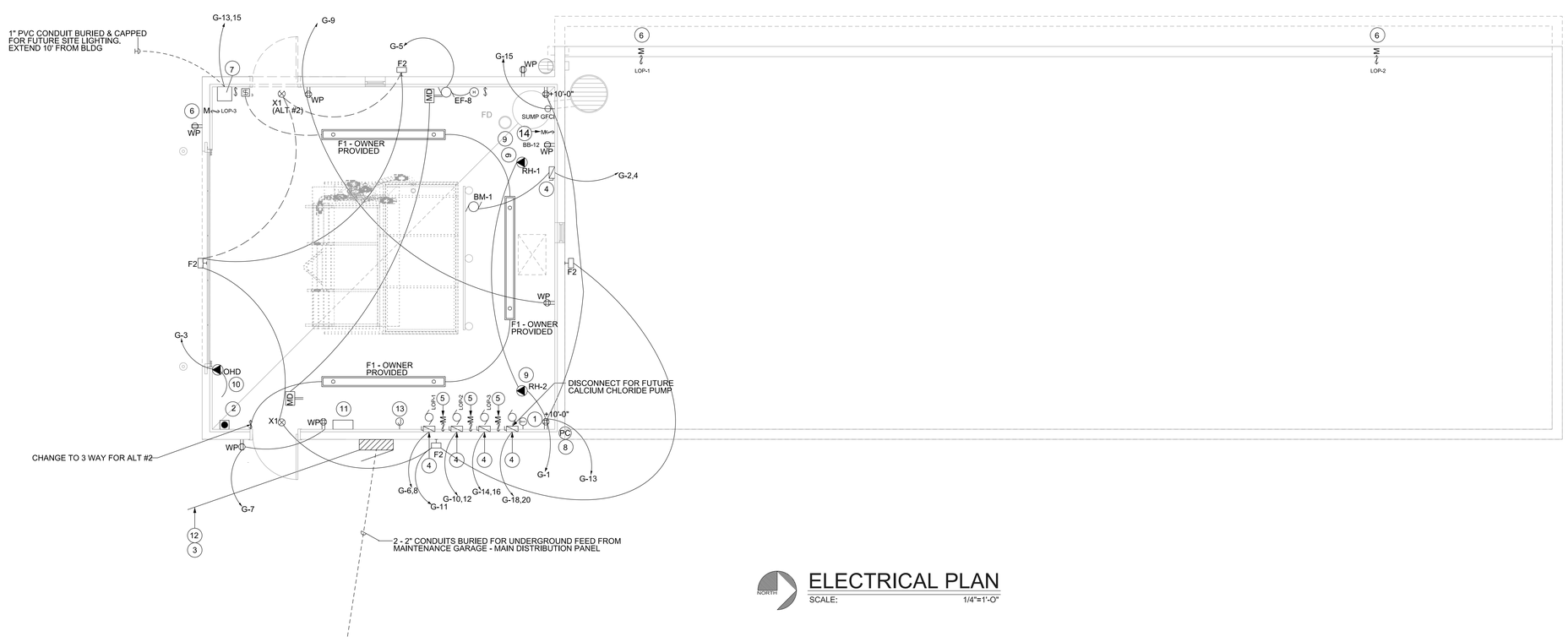

ELECTRICAL PLAN

NORTH

SCALE: 1/4"=1'-0"

DISTRICT: 06

COUNTY: JOHNSON

PROJECT NUMBER: BG-4A32(000)--80-52

CORALVILLE, IA

CORALVILLE BRINE BUILDING

BRINE BUILDING - ELECTRICAL

IOWA DOT
SMARTER I SIMPLER I CUSTOMER DRIVEN
OFFICE OF SUPPORT SERVICES
800 LINCOLN WAY
AMES, IOWA 50010 (515)239-1289

DATE: MAR 17, 2016

DRAWN BY: DESIGN TEAM

APPROVED: J BURNES

REVISIONS:

SHEET 6 OF 6

BE-1