IOWA DOT
SMARTER | SIMPLER | CUSTOMER DRIVEN
www.iowadot.gov

Date: April 19, 2016

ADDENDUM NO. 2
to the
Iowa Department of Transportation
Proposal No. 16355
For The Construction of brine buildings for
Corning and Avoca DOT Maintenance Facilities.
Letting Date: 05/11/2016

Notice To Bidders:
This Addendum is issued to incorporate the following additions, deletions, corrections, and/or clarifications to the terms or specifications and shall hereby be considered a part of the final contract documents. This Addendum shall supersede, modify and/or change all statements to the contrary in the bid proposal and shall take precedence over previous terms or specifications.

Changes: Loren Cook Companies ACW-B Centrifugal Exhaust Ventilator Wall Mounted / Belt drive is being added as an acceptable alternative.

Additions: A 5% bid bond is being added to this proposal. This is 5% of what your bid response will be. It is the vendor's responsibility to provide the percentage and your bid response amount to the surety company you are bonded by.

All Bidders must sign and return this Addendum for the bid opportunity referenced above. Failure to do so may subject the Bidder to disqualification. If a bid response has already been submitted, this Addendum shall be signed and emailed or faxed to the Purchasing Section prior to the scheduled Letting Date.

_____ _____
Company Name *(please print)* Date

_____
Signature

Sincerely,

Jody McNaughton, Purchasing Agent (title)
Phone No. 515-239-1298 Fax No. 515-239-1538
Jody.mcnaughton@dot.iowa.gov

COOK

MARK: EF-8
PROJECT: IOWA DOT BRINE BUILDINGS
DATE: 4/14/2016

ACW-B

Centrifugal
Exhaust Ventilator
Wall Mounted/Belt Drive

STANDARD CONSTRUCTION FEATURES:

All aluminum housing - Backward inclined all aluminum wheel - Mounting flange with keyslots and template - Two piece top cap with stainless steel quick release latches - Birdscreen - Lifting Lugs - Permanently lubricated ball bearing motors - Oil and heat resistant, static conducting belts - Adjustable pitch drives through 2 hp motor - Corrosion resistant fasteners - Regreasable bearings in a cast iron pillow block housing, rated at 200,000 hours average life - All fans factory adjusted to specified fan RPM - Transit tested packaging - Standard motors ship factory installed.

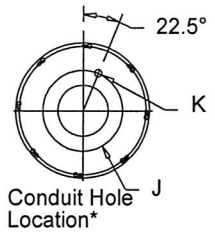

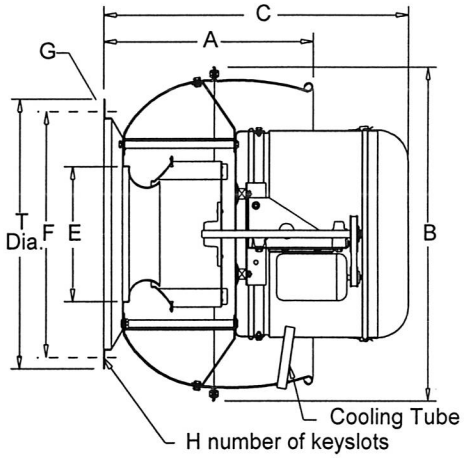

Performance (*Bhp includes 18% drive loss)

Qty	Catalog Number	Flow (CFM)	SP (inwc)	Fan RPM	Power* (HP)	FEG
1	120W3B	1150	.125	1216	.140	n/a(<1HP)

Altitude (ft): 965 Temperature (F): 70

Motor Information

HP	RPM	Volts/Ph/Hz	Enclosure	FLA	Mounted	TOL
1/4	1725	115/1/60	ODP -SE	5.8	Yes	Yes

FLA based on NEC (2014) Table 430.248

Accessories:

DRIVES (1.5 SF) @ 1216 RPM
LORENIZED-SPEC.COLOR-(STORM GRAY)
ALUMINUM BIRDSCREEN
STAINLESS HARDWARE
STAINLESS STL SHAFT
NEMA4 DISCONNECT
MOTORIZED DAMPER

Dimensions (inches)

A	18-7/16
B	30-3/16
C	28-1/4
E Square	12
E Round	12
F	23-1/2
G Dia.	3/8
H Num.	4
J Dia.	16
K Dia.	7/8

T Dia.	25

NOTE: Accessories may affect dimensions shown.

Weight(lbs)***	Shipping	80	Unit	64

***Includes fan, motor & accessories.

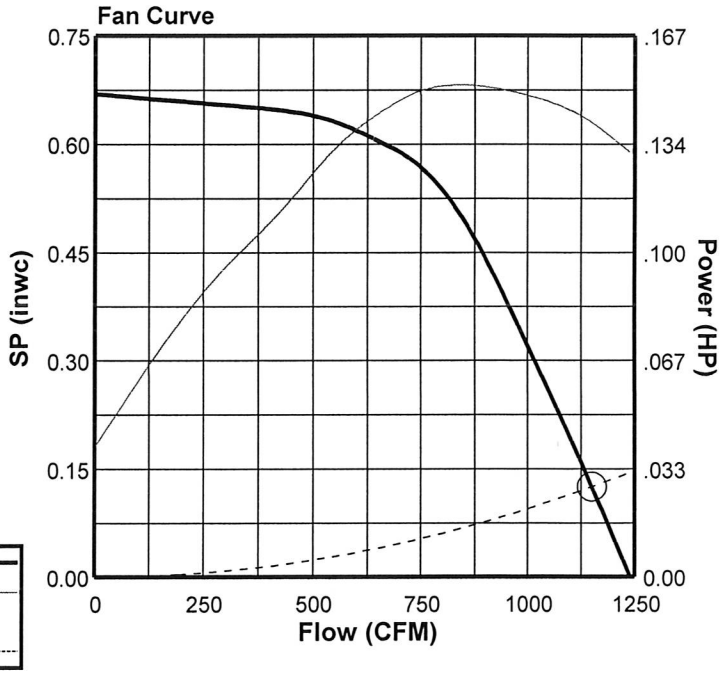

Fan Curve Legend

CFM vs SP	———
CFM vs HP	———
Point of Operation	○
System Curve	- - - - -

Form 131084 (01-16)

BID BOND

KNOW ALL PERSONS BY THESE PRESENTS: That we, _____
(Bidder's Name)

_____ of _____
(City,State)

as principal, and the _____
(Surety)

of _____ as Surety, are held and firmly bound unto the Iowa Department of
(Address)

Transportation and to the State of Iowa, or Municipality as defined in Iowa Code, Section 73A.1 as applicable, hereinafter defined as Obligee, in the penal sum as shown in the contract documents of the specified project, for which payment said principal and surety bind themselves, their heirs, executors, administrators, successors, and assigns jointly and severally, firmly by these presents.

WHEREAS, the principal is herewith submitting his/her or its sealed proposal for:

County _____

Type of Work _____

Date of Letting _____ , 20 _____ .

NOW THEREFORE, if the said bid or proposal submitted by said principal be accepted, and the principal be awarded a contract with the Obligee in accordance with the terms of such bid solicitation, and give such bond as may be specified in the bidding or contract documents with good and sufficient surety for the faithful performance of such contract and for the prompt payment of labor and material furnished in the prosecution thereof, then this obligation shall become null and void or in the event of the failure of the principal to enter such contract and give such bond, the principal shall pay to the Obligee the full amount of the bid bond, together with court costs, attorney's fees, and any other expense of recovery.

IN WITNESS WHEREOF, the principal and surety have caused these presents to be signed this _____ day of

_____ , 20 _____ .

_____
Principal
(Bidder's Name)

By _____
Bidder's Signature

_____
Address

_____
Surety

By _____
Authorized Surety Representative