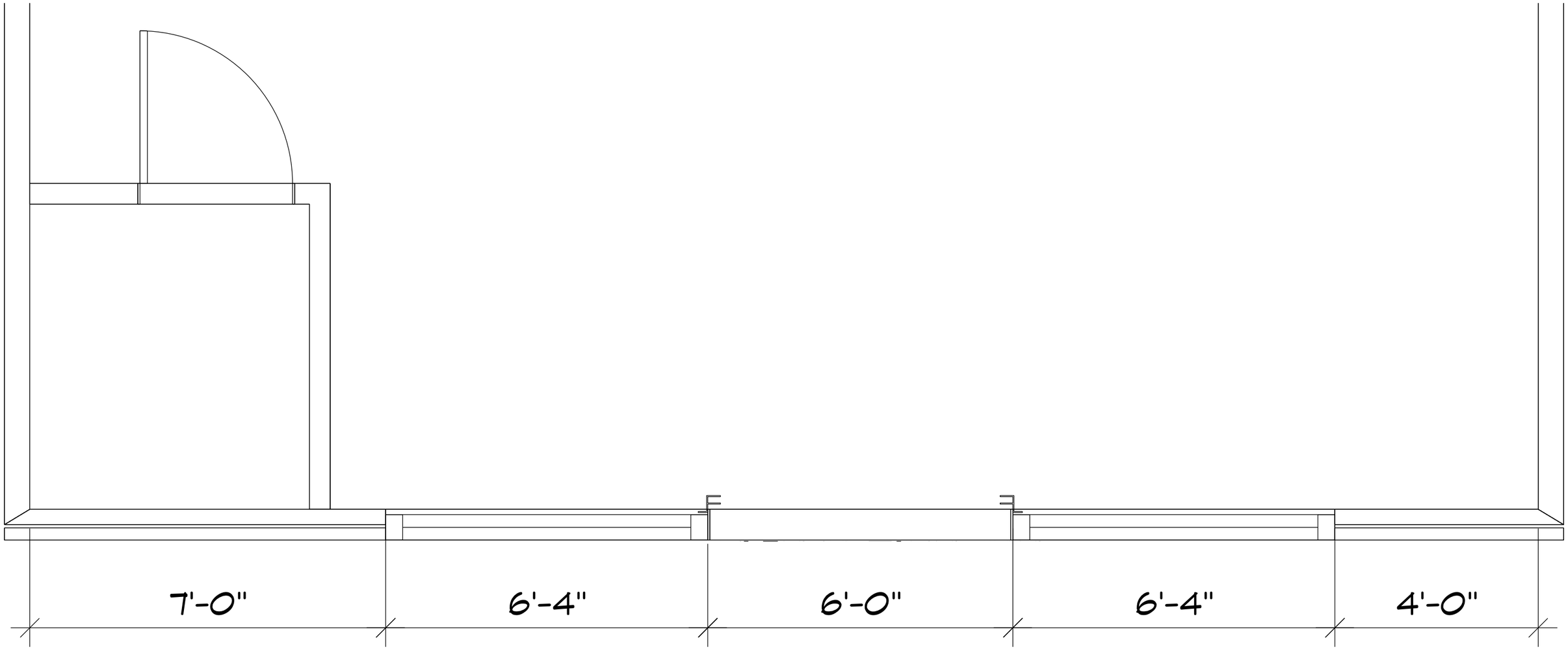

PROPOSED FLOOR PLAN

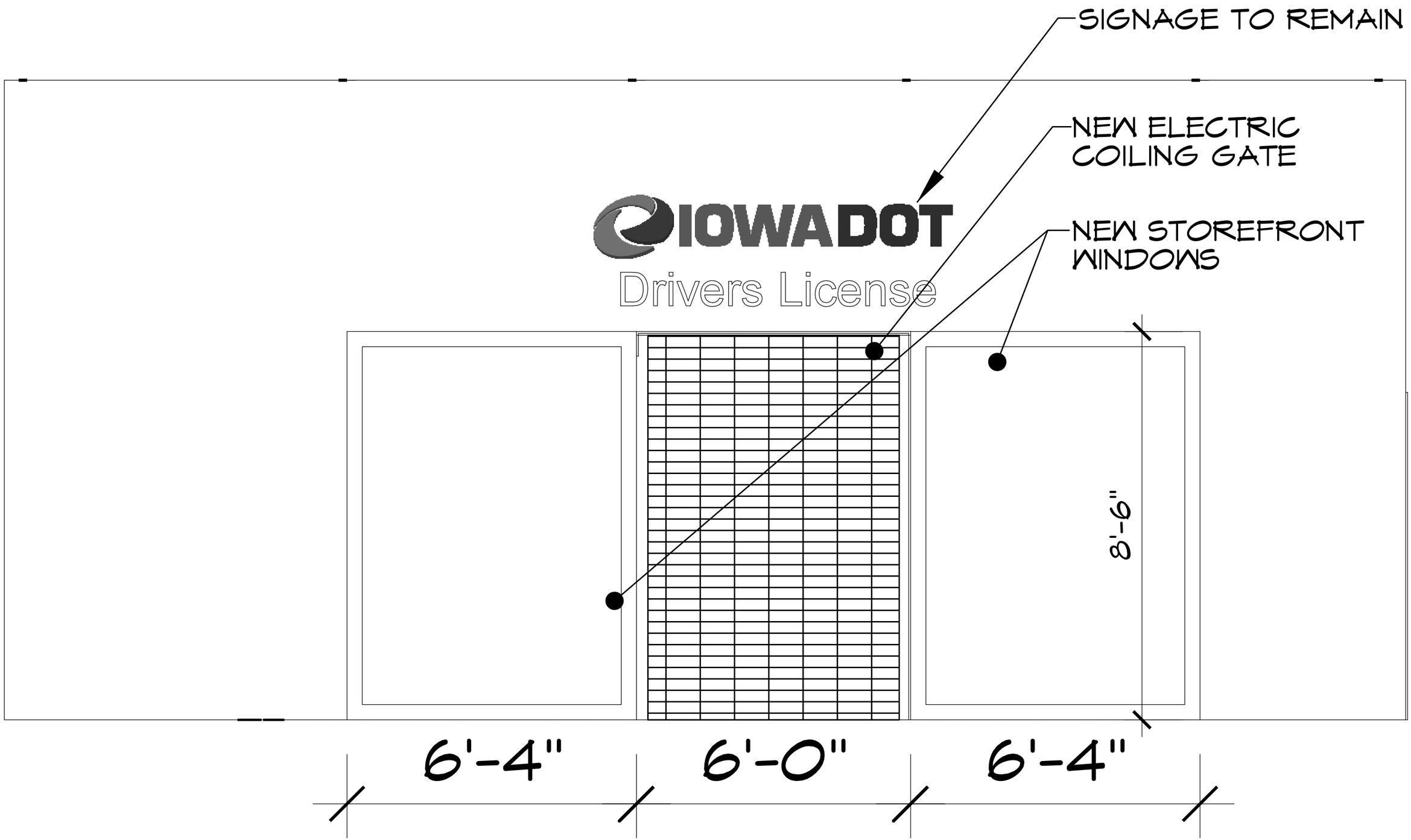
SIGNAGE TO REMAIN
NEW ELECTRIC COILING GATE
NEW STOREFRONT WINDOWS
IOWADOT
Drivers License
8'-6"
6'-4"
6'-0"
6'-4"