Iowa Department of Transportation
Highway Division

ENGLISH
STEEL OVERHEAD SIGN TRUSS
STANDARDS

INDEX FOR STEEL OVERHEAD SIGN TRUSS STANDARDS

SOST-01-11	INDEX AND NOTES FOR 50′ - 130′ SPANS
SOST-02-11	ELEVATION VIEWS FOR 50′ - 75′ SPANS
SOST-03-11	ELEVATION VIEWS FOR 80′ - 100′ SPANS
SOST-04-11	ELEVATION VIEWS FOR 105′ - 115′ SPANS
SOST-05-11	ELEVATION VIEWS FOR 120′ - 130′ SPANS
SOST-06-11	SUPPORT BASE AND DMS ELECTRICAL ACCESS DETAILS FOR 50′ - 100′ SPANS
SOST-07-11	SUPPORT BASE AND DMS ELECTRICAL ACCESS DETAILS FOR 105′ - 130′ SPANS
SOST-08-11	GUSSET PLATE CONNECTIONS
SOST-09-11	TRUSS SUPPORT AND CHORD SPLICE DETAILS FOR 50′ - 100′ SPANS
SOST-10-11	TRUSS SUPPORT AND CHORD SPLICE DETAILS FOR 105′ - 130′ SPANS
SOST-11-11	SIGN ATTACHMENT DETAILS
SOST-12-11	DYNAMIC MESSAGE SIGN (DMS) RUNWAY DETAILS
SOST-13-11	DMS RUNWAY DETAILS
SOST-14-11	DMS RUNWAY GATE DETAILS
SOST-15-11	DMS LADDER DETAILS
SOST-16-11	DMS LADDER SECURITY DOOR DETAILS
SOST-17-11	FOUNDATION DETAILS - NON-STAGED
SOST-18-11	CONDUIT LOCATION DETAILS
SOST-19-11	FOUNDATION DETAILS FOR STAGED CONSTRUCTION - STAGE 1
SOST-20-11	FOUNDATION DETAILS FOR STAGED CONSTRUCTION - STAGE 2

ANCHOR-BOLT NUT TIGHTENING PROCEDURE:

1) THIS WORK SHALL BE PERFORMED ONLY ON DAYS WITH WINDS LESS THAN 15 MPH. ALL TIGHTENING OF THE NUTS IS TO BE DONE IN THE PRESENCE OF THE INSPECTOR. ONCE THE TIGHTENING PROCEDURE IS STARTED IT MUST BE COMPLETED ON ALL OF THE BASE PLATE NUTS WITHOUT PAUSE OR DELAY.

2) PROPERLY SIZED WRENCHES DESIGNED FOR TIGHTENING NUTS AND/OR BOLTS SHALL BE USED TO AVOID ROUNDING OR OTHER DAMAGE TO THE NUTS. ADJUSTABLE END WRENCHES OR PIPE WRENCHES SHALL NOT BE USED.

3) BASE PLATE, ANCHOR BOLTS AND NUTS ARE TO BE FREE OF ANY DIRT OR DEBRIS.

4) APPLY STICK WAX OR BEES WAX TO THE THREADS AND BEARING SURFACES OF THE ANCHOR BOLT, NUTS, AND WASHERS.

5) TIGHTEN TOP NUTS SO THEY FULLY CONTACT THE BASE PLATE. TIGHTEN LEVELING NUTS TO SNUG TIGHT CONDITION. SNUG TIGHT IS DEFINED AS THE FULL EFFORT OF ONE PERSON ON A WRENCH WITH A LENGTH EQUAL TO 14 TIMES THE BOLT DIAMETER BUT NOT LESS THAN 18 INCHES. APPLY FORCE AS CLOSE TO THE END OF THE WRENCH AS POSSIBLE. PULL FIRMLY BY LEANING BACK AND USING ENTIRE BODY WEIGHT ON THE END OF THE WRENCH UNTIL THE NUT STOPS ROTATING. USE A MINIMUM OF TWO SEPARATE PASSES OF TIGHTENING. SEQUENCE THE TIGHTENING IN EACH PASS SO THAT THE NUT ON THE OPPOSITE SIDE, TO THE EXTENT POSSIBLE, WILL BE SUBSEQUENTLY TIGHTENED UNTIL ALL OF THE NUTS IN THAT PASS HAVE BEEN TIGHTENED.

6) TIGHTEN TOP NUTS TO SNUG TIGHT AS DESCRIBED FOR THE LEVELING NUTS.

7) MATCH-MARK THE TOP NUTS AND BASE PLATE USING PAINT, CRAYON, OR OTHER APPROVED MEANS TO PROVIDE A REFERENCE FOR DETERMINING THE RELATIVE ROTATION OF THE NUT AND BASE PLATE DURING TIGHTENING. USING A STRIKING OR HYDRAULIC WRENCH, FURTHER TIGHTEN THE TOP NUTS IN TWO PASSES AS LISTED BELOW. USE A SEQUENCE OF TIGHTENING IN EACH PASS SO THAT THE NUT ON THE OPPOSITE SIDE, TO THE EXTENT POSSIBLE, WILL BE SUBSEQUENTLY TIGHTENED UNTIL ALL NUTS IN THAT PASS HAVE BEEN TURNED. DO NOT ROTATE THE LEVELING NUT DURING THE TOP NUT TIGHTENING.

ANCHOR-BOLT SIZE	FIRST PASS	SECOND PASS	TOTAL ROTATION
$1\frac{1}{2}$"Φ	1/6 TURN	1/6 TURN	1/3 TURN

8) LUBRICATE, PLACE AND TIGHTEN THE JAM NUTS TO SNUG TIGHT.

GALVANIZED STEEL NOTES:

ALL STEEL CHORDS, DIAGONALS AND STRUTS SHALL COMPLY WITH ASTM A53 GRADE B, TYPE E OR S; THE AMERICAN PETROLEUM INSTITUTE (API) 5L GRADE B; ASTM A500 GRADE B; OR API 5L GRADE X42. THESE MEMBERS DESIGNATED AS STEEL PIPE SHALL HAVE A MINIMUM YIELD STRENGTH OF 35 KSI.

ALL STEEL POSTS SHALL COMPLY WITH ASTM A500 GRADE B OR API 5L GRADE X42. THESE MEMBERS DESIGNATED AS HOLLOW STRUCTURAL SECTIONS (HSS) SHALL HAVE A MINIMUM YIELD STRENGTH OF 42 KSI.

ALL STEEL SHAPES, BARS, AND PLATES SHALL COMPLY WITH ASTM A36 OR ASTM A572. ALL STEEL BAR GRATING SECTIONS INCLUDING BEARING BARS, CROSS BARS, AND BANDING BARS SHALL COMPLY WITH ASTM A1011 TYPE 2.

STEEL WELDING SHALL BE IN ACCORDANCE WITH THE CURRENT EDITION OF THE AWS SPECIFICATIONS D1.1, STRUCTURAL WELDING CODE—STEEL.

ULTRASONIC TESTING SHALL BE PERFORMED ON THE POST-TO-BASE-PLATE WELDS.

ALL STEEL SECTIONS SHALL BE HOT-DIPPED GALVANIZED AFTER FABRICATION IN ACCORDANCE WITH ASTM A123. PROVIDE VENT HOLES FOR GALVANIZING. SHOW LOCATION AND SIZE OF VENT HOLES ON SHOP DRAWINGS.

GALVANIZED STEEL FASTENER NOTES:

GALVANIZED STEEL FASTENERS SHALL BE IN ACCORDANCE WITH ARTICLE 2408.03, S AND ARTICLE 4187.01, C, 2 OF THE STANDARD SPECIFICATIONS. REGULAR NUTS AND JAM NUTS SHALL BE ASTM A563 GRADE DH HEAVY HEX. REGULAR NUTS MAY BE SUBSTITUTED FOR JAM NUTS. LOCK WASHERS SHALL NOT BE SUBSTITUTED FOR JAM NUTS. ASTM A449 TYPE 1 BOLTS MAY BE SUBSTITUTED FOR ASTM A325 TYPE 1 BOLTS WHERE NECESSARY TO ASSURE PROPER BOLT LENGTH AND THREAD LENGTH.

UNLESS OTHERWISE NOTED ON THE PLANS, GALVANIZED STEEL FASTENERS SHALL BE TENSIONED BY TURN-OF-NUT METHOD.

U-BOLT NOTES:

U-BOLTS MAY BE MADE OF GALVANIZED STEEL OR STAINLESS STEEL AND SHALL BE IN ACCORDANCE WITH ARTICLE 4187.01, C, 2 OF THE STANDARD SPECIFICATIONS. WASHERS, REGULAR NUTS, AND JAM NUTS SHALL USE THE SAME ALLOY PROPERTIES AS THOSE OF THE U-BOLTS SPECIFIED. REGULAR NUTS MAY BE SUBSTITUTED FOR JAM NUTS. LOCK WASHERS SHALL NOT BE SUBSTITUTED FOR JAM NUTS.

ANCHOR BOLT NOTES:

ALL ANCHOR BOLT MATERIALS AND GALVANIZING SHALL BE IN ACCORDANCE WITH ARTICLE 4187.01, C, 3 OF THE STANDARD SPECIFICATIONS.

BENDING OR WELDING OF ANCHOR BOLTS SHALL NOT BE ALLOWED.

SPECIFICATIONS:

DESIGN: AASHTO STANDARD SPECIFICATIONS FOR STRUCTURAL SUPPORTS FOR HIGHWAY SIGNS, LUMINAIRES AND TRAFFIC SIGNALS, SERIES OF 2009 WITH INTERIMS.

CONSTRUCTION: IOWA DEPARTMENT OF TRANSPORTATION STANDARD SPECIFICATIONS FOR HIGHWAY AND BRIDGE CONSTRUCTION, SERIES 2012, PLUS APPLICABLE GENERAL SUPPLEMENTAL SPECIFICATIONS, DEVELOPMENTAL SPECIFICATIONS, SUPPLEMENTAL SPECIFICATIONS AND SPECIAL PROVISIONS SHALL APPLY TO CONSTRUCTION WORK ON THIS PROJECT.

DESIGN STRESSES:

DESIGN STRESSES FOR MATERIALS ARE IN ACCORDANCE WITH AASHTO STANDARD SPECIFICATIONS FOR STRUCTURAL SUPPORTS FOR HIGHWAY SIGNS, LUMINAIRES AND TRAFFIC SIGNALS, SERIES OF 2009 WITH INTERIMS.

REINFORCING STEEL IN ACCORDANCE WITH AASHTO STANDARD SPECIFICATIONS FOR HIGHWAY BRIDGES, SERIES OF 2002, SECTION 8, GRADE 60.

CONCRETE IN ACCORDANCE WITH AASHTO STANDARD SPECIFICATIONS FOR HIGHWAY BRIDGES, SERIES OF 2002, SECTION 8, f′c = 4.0 KSI.

GENERAL NOTES:

ALL STEEL OVERHEAD TRUSS BRIDGE SIGN SUPPORTS ARE DESIGNED FOR 30 LB/FT^2 WIND PRESSURE ON SUPPORT MEMBERS, 30 LB/FT^2 ON SIGNS, AND 40 LB/FT^2 ON DYNAMIC MESSAGE SIGNS (DMS). EACH DMS IS LIMITED TO A WEIGHT OF 4500 LBS., A WIDTH OF 32′-0, A HEIGHT OF 9′-0, AND A DEPTH OF 4′-0. A MAXIMUM OF ONE DMS SHALL BE MOUNTED TO EACH OVERHEAD TRUSS BRIDGE. NO ADDITIONAL SIGNS SHALL BE MOUNTED TO A TRUSS BRIDGE SUPPORTING A DMS.

FOR PRIMARY PROJECTS, SHOP DRAWINGS SHALL BE SUBMITTED BY THE CONTRACTOR DIRECTLY TO THE IOWA DOT OFFICE OF BRIDGES AND STRUCTURES FOR REVIEW. COPIES OF SHOP DRAWINGS SHALL ALSO BE SENT BY THE CONTRACTOR TO THE IOWA DOT RESIDENT CONSTRUCTION ENGINEER AND DISTRICT MATERIALS ENGINEER. FOR NON-PRIMARY PROJECTS (E.G. SECONDARY ROAD SYSTEM), SHOP DRAWINGS SHALL BE SUBMITTED TO THE ENGINEER UNLESS NOTED OTHERWISE IN THE CONTRACT DOCUMENTS.

SHOP DRAWINGS SHALL INDICATE LEFT AND RIGHT TRUSS SUPPORTS.

CLEAR DISTANCE FROM FACE OF CONCRETE TO THE NEAREST REINFORCING BAR SHALL BE 2" UNLESS OTHERWISE SHOWN.

KEYWAY DIMENSIONS SHOWN ON THE PLANS ARE BASED ON NOMINAL DIMENSIONS UNLESS STATED OTHERWISE. IN ADDITION, THE BEVEL USED ON THE KEYWAY SHALL BE LIMITED TO A MAXIMUM OF 10 DEGREES FROM VERTICAL.

STEEL OVERHEAD SIGN TRUSSES SHALL NOT BE USED ON BRIDGES WITHOUT THE APPROVAL OF THE OFFICE OF BRIDGES AND STRUCTURES.

STRUCTURAL ALIGNMENT/TOLERANCE NOTES:

THE PRECISE ALIGNING AND ERECTING OF ALL COMPONENTS OF THE OVERHEAD SIGN TRUSS AND ITS SUPPORTS SHALL BE CONSIDERED ESSENTIAL. THE CONTRACTOR SHALL SUBMIT DOCUMENTATION TO THE ENGINEER SHOWING THAT THE VARIOUS COMPONENTS HAVE BEEN MEASURED AND ARE LOCATED WITHIN THE TOLERANCES LISTED BELOW.

EACH FOUNDATION SHALL BE ACCURATELY LOCATED, WITH THE CENTER OF THE TWO ANCHOR BOLT GROUPS NOT MORE THAN 1 INCH FROM THE PLAN LOCATION IN THE DIRECTION PARALLEL WITH AND PERPENDICULAR TO THE OVERHEAD TRUSS.

THE TWO FOUNDATIONS SHALL BE PARALLEL, WITH THE DISTANCES ALONG THE OVERHEAD TRUSS BETWEEN CENTERS OF FRONT AND REAR ANCHOR BOLT GROUPS DIFFERING BY NOT MORE THAN 1 INCH.

ANCHOR BOLT GROUPS SHALL BE LOCATED ACCURATELY WITH CENTERS OF ADJACENT GROUPS IN EACH FOUNDATION WITHIN $\frac{3}{16}$ INCH OF THE PLAN DISTANCE APART.

ANCHOR BOLTS SHALL BE PLUMB WITHIN $\frac{1}{4}$ INCH PER FOOT FROM VERTICAL.

ANCHOR BOLTS SHALL PROJECT ABOVE TOP OF FOUNDATION WITHIN $\frac{1}{4}$ INCH OF THE PLAN DIMENSION.

EACH TRUSS SUPPORT POST SHALL BE PLUMB WITHIN $\frac{1}{16}$ INCH PER FOOT OF VERTICAL IN TWO PERPENDICULAR DIRECTIONS.

STICK-OUT OF EACH TRUSS LOWER CHORD SHALL BE WITHIN 3 AND $5\frac{1}{2}$ INCHES MEASURED FROM OUTER U-BOLT TO INSIDE OF CHORD STOP RING.

THE OVERHEAD TRUSS SHALL BE SQUARE WITHIN SUPPORT POSTS. THE HORIZONTAL LINES BETWEEN CHORDS SHALL BE LEVEL WITHIN $\frac{1}{16}$ INCH PER FOOT OF HORIZONTAL, AND THE VERTICAL LINES BETWEEN CHORDS SHALL BE PLUMB WITHIN $\frac{1}{16}$ INCH PER FOOT OF VERTICAL.

09-14
LATEST REVISION DATE

APPROVED BY BRIDGE ENGINEER

IOWA DOT Highway Division

STANDARD DESIGN

STEEL OVERHEAD SIGN TRUSS

SEPTEMBER, 2011

INDEX AND NOTES

50′-130′ SPANS

SOST-01-11

REVISION: 09-14 - MODIFIED NOTES.
STEELOVERHEADSIGNTRUSS.DGN - SOST-01-11 - THIS SHEET ISSUED 09-11.

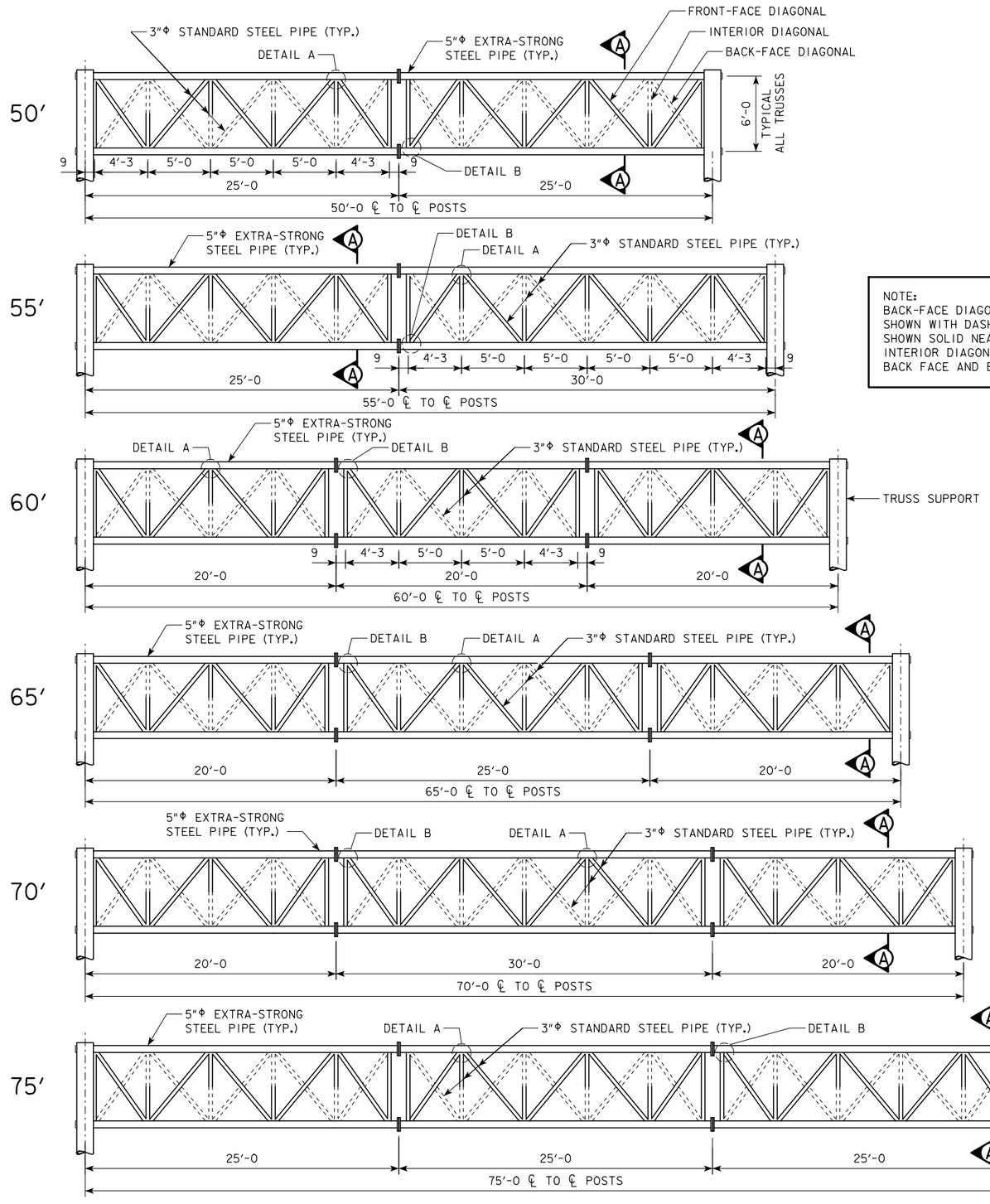

PART ELEVATION VIEWS

GUSSET PLATES NOT SHOWN

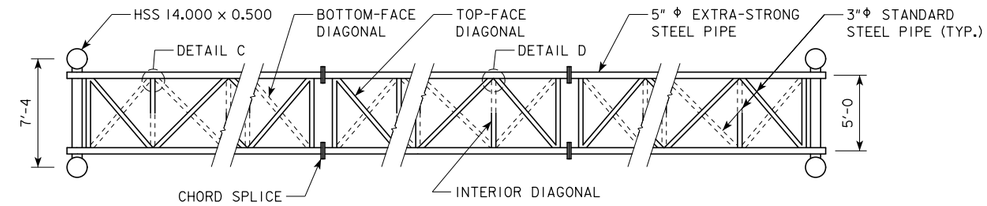

PART TOP VIEW

NOTE: INTERIOR DIAGONALS HAVE SAME ORIENTATION AT CHORD SPLICE LOCATIONS

NOTE:
BACK-FACE DIAGONALS AND BOTTOM-FACE DIAGONALS ARE SHOWN WITH DASHED LINES. INTERIOR DIAGONALS ARE SHOWN SOLID NEAR THE FRONT FACE AND TOP FACE. INTERIOR DIAGONALS ARE SHOWN DASHED TOWARDS THE BACK FACE AND BOTTOM FACE.

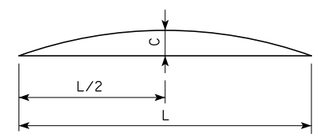

CAMBER DIAGRAM

SPAN L	CAMBER C
50′	$\frac{3}{4}$
55′	$\frac{3}{4}$
60′	$\frac{7}{8}$
65′	1
70′	$1\frac{1}{8}$
75′	$1\frac{1}{4}$

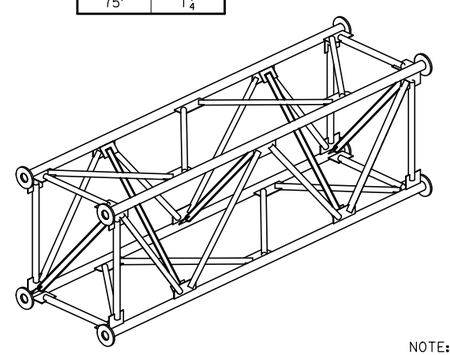

ISOMETRIC VIEW TYPICAL TRUSS UNIT

* SIGNS THAT ARE HORIZONTALLY OFFSET FROM CENTER OF TRUSS ARE PERMITTED IF SAME MAXIMUM SIGN HEIGHT AND MAXIMUM SIGN AREA PARAMETERS ARE USED AND END DISTANCES ARE GREATER THAN OR EQUAL TO MINIMUM END DISTANCE 'E' SHOWN IN TABLE.

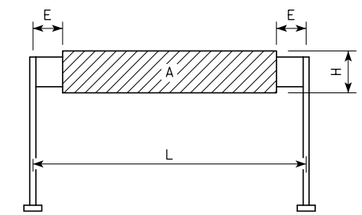

SIGN AREA FOR STEEL OVERHEAD SIGN TRUSS

CENTERED *

ALLOWABLE SIGN AREA

CENTERED *

SPAN	MAX. SIGN HEIGHT	MIN. END DIST.		MAX. SIGN AREA
L	H	E		A
50′	19′-0	5′-0		760 S.F.
55′	19′-0	5′-0		855 S.F.
60′	19′-0	5′-0		950 S.F.
65′	19′-0	7′-6		950 S.F.
70′	19′-0	10′-0		950 S.F.
75′	19′-0	12′-6		950 S.F.
65′	14′-9	5′-0		811 S.F.
70′	14′-9	5′-0		885 S.F.
75′	14′-9	5′-6		944 S.F.

NOTE: SEE STANDARD SHEET SOST-08-11 FOR SECTION A-A AND DETAILS A, B, C AND D.

LATEST REVISION DATE

APPROVED BY BRIDGE ENGINEER

Iowa Department of Transportation
Highway Division

STANDARD DESIGN

STEEL OVERHEAD SIGN TRUSS

SEPTEMBER, 2011

ELEVATION VIEWS FOR TRUSS SPANS
50′-75′ SPANS

SOST-02-11

STEELOVERHEADSIGNTRUSS.DGN - SOST-02-11 - THIS SHEET ISSUED 09-11.

PART ELEVATION VIEWS

GUSSET PLATES NOT SHOWN

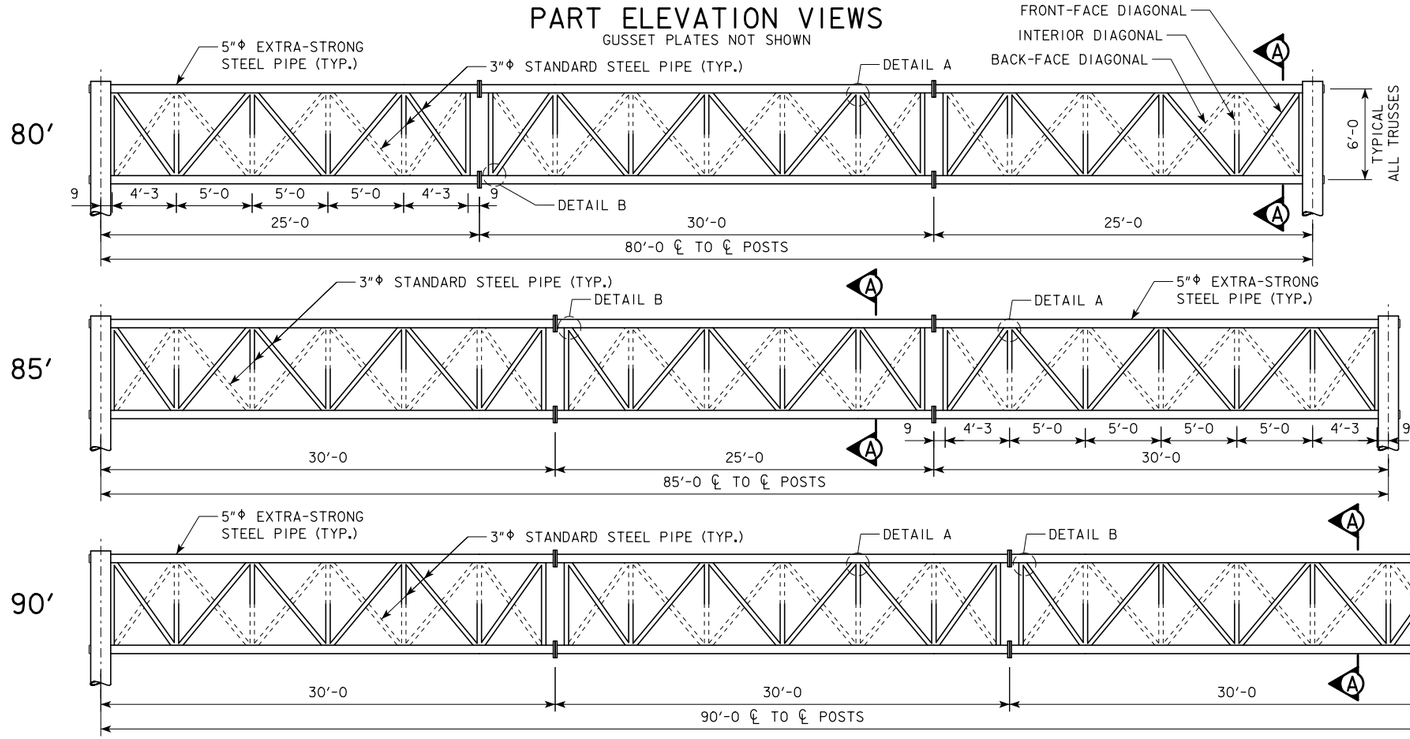

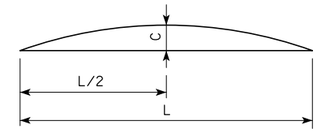

CAMBER DIAGRAM

SPAN L	CAMBER C
80′	$1\frac{3}{8}$
85′	$1\frac{1}{2}$
90′	$1\frac{3}{4}$
95′	$1\frac{7}{8}$
100′	$2\frac{1}{8}$

NOTE:
BACK-FACE DIAGONALS AND BOTTOM-FACE DIAGONALS ARE SHOWN WITH DASHED LINES. INTERIOR DIAGONALS ARE SHOWN SOLID NEAR THE FRONT FACE AND TOP FACE. INTERIOR DIAGONALS ARE SHOWN DASHED TOWARDS THE BACK FACE AND BOTTOM FACE.

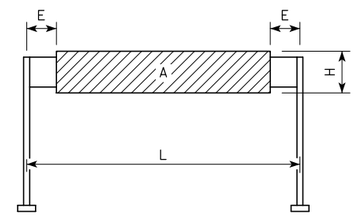

SIGN AREA FOR STEEL OVERHEAD SIGN TRUSS

CENTERED

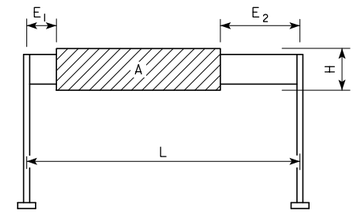

SIGN AREA FOR STEEL OVERHEAD SIGN TRUSS

OFFSET

SIGN OFFSET MAY BE MIRRORED (E_1 AND E_2 VALUES REVERSED).

ALLOWABLE SIGN AREA

CENTERED				
SPAN	MAX. SIGN HEIGHT	MIN. END DIST.		MAX. SIGN AREA
L	H	E		A
80′	19′-0	15′-0		950 S.F.
85′	19′-0	17′-5		950 S.F.
90′	19′-0	20′-0		950 S.F.
95′	19′-0	22′-5		950 S.F.
100′	19′-0	25′-0		950 S.F.
80′	14′-9	8′-0		944 S.F.
85′	14′-9	10′-6		944 S.F.
90′	14′-9	13′-0		944 S.F.
95′	14′-9	15′-6		944 S.F.
100′	14′-9	18′-0		944 S.F.
85′	12′-0	5′-0		900 S.F.
90′	12′-0	5′-6		948 S.F.
95′	12′-0	8′-0		948 S.F.
100′	12′-0	10′-6		948 S.F.

OFFSET				
SPAN	MAX. SIGN HEIGHT	MIN. LEFT END DIST.	MIN. RIGHT END DIST.	MAX. SIGN AREA
L	H	E_1	E_2	A
80′	19′-0	10′-0	30′-0	760 S.F.
85′	19′-0	10′-0	38′-0	703 S.F.
90′	19′-0	10′-0	44′-0	684 S.F.
95′	19′-0	10′-0	50′-0	665 S.F.
100′	19′-0	10′-0	56′-0	646 S.F.
85′	14′-9	10′-0	13′-0	915 S.F.
90′	14′-9	10′-0	25′-0	811 S.F.
95′	14′-9	10′-0	34′-0	752 S.F.
100′	14′-9	10′-0	41′-0	723 S.F.
100′	12′-0	10′-0	14′-0	912 S.F.

NOTE: SEE STANDARD SHEET SOST-08-11 FOR SECTION A-A AND DETAILS A, B, C AND D.

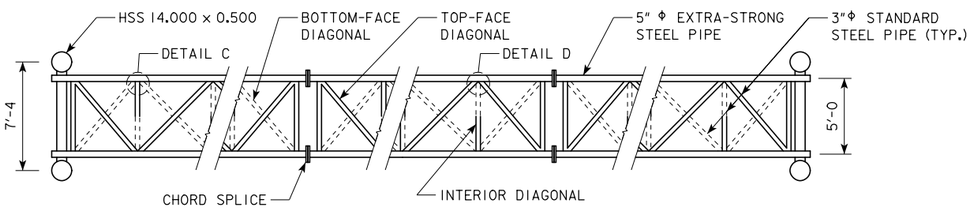

PART TOP VIEW

NOTE: INTERIOR DIAGONALS HAVE SAME ORIENTATION AT CHORD SPLICE LOCATIONS

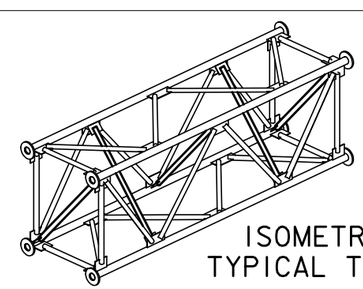

ISOMETRIC VIEW TYPICAL TRUSS UNIT

LATEST REVISION DATE

APPROVED BY BRIDGE ENGINEER

Iowa Department of Transportation
Highway Division

STANDARD DESIGN

STEEL OVERHEAD SIGN TRUSS

SEPTEMBER, 2011

ELEVATION VIEWS FOR TRUSS SPANS

80′-100′ SPANS

SOST-03-11

STEELOVERHEADSIGNTRUSS.DGN - SOST-03-11 - THIS SHEET ISSUED 09-11.

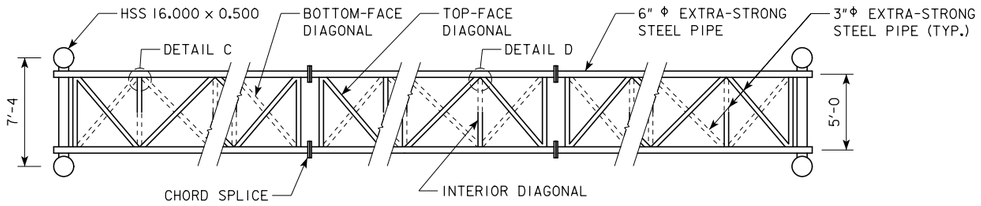

PART TOP VIEW

NOTE: INTERIOR DIAGONALS HAVE SAME ORIENTATION AT CHORD SPLICE LOCATIONS

NOTE:
BACK-FACE DIAGONALS AND BOTTOM-FACE DIAGONALS ARE SHOWN WITH DASHED LINES. INTERIOR DIAGONALS ARE SHOWN SOLID NEAR THE FRONT FACE AND TOP FACE. INTERIOR DIAGONALS ARE SHOWN DASHED TOWARDS THE BACK FACE AND BOTTOM FACE.

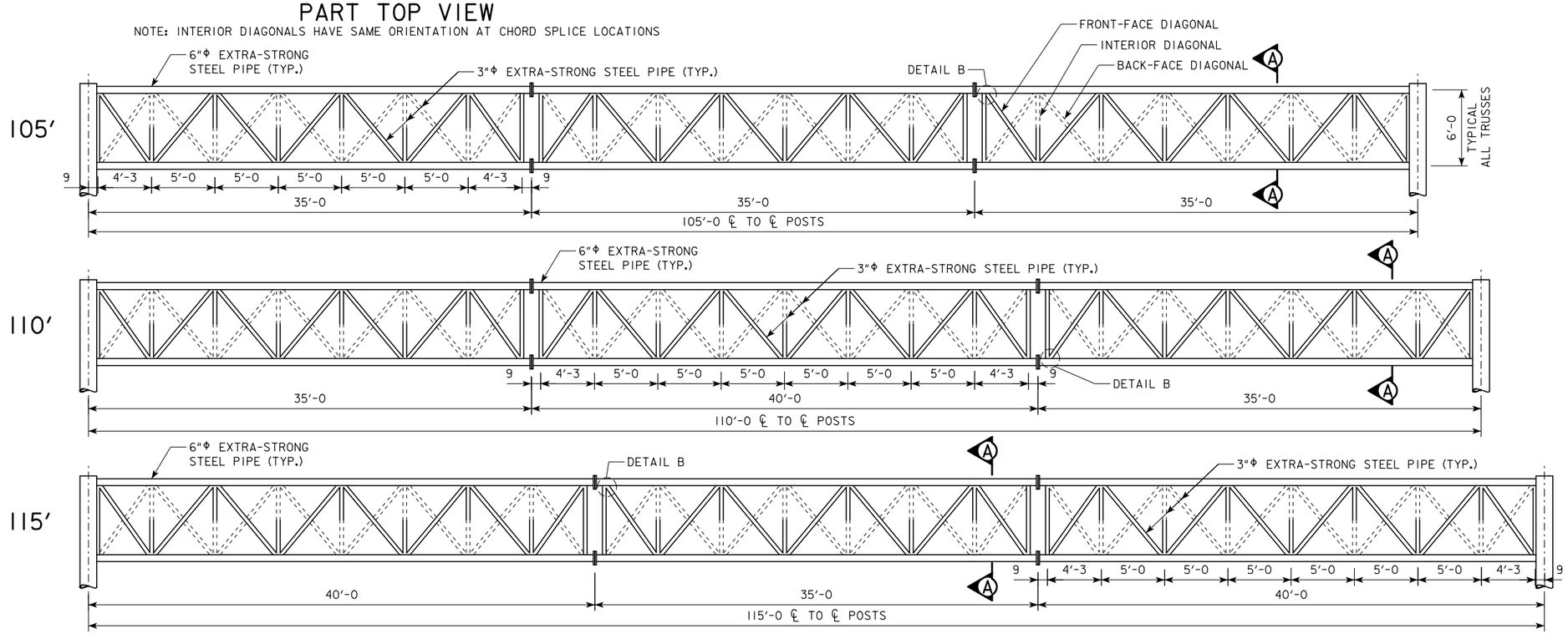

PART ELEVATION VIEWS

GUSSET PLATES NOT SHOWN

ALLOWABLE SIGN AREA

CENTERED				
SPAN	MAX. SIGN HEIGHT	MIN. END DIST.		MAX. SIGN AREA
L	H	E		A
105'	19'-0	27'-6		950 S.F.
110'	19'-0	30'-0		950 S.F.
115'	19'-0	32'-6		950 S.F.
105'	14'-9	20'-6		944 S.F.
110'	14'-9	23'-0		944 S.F.
115'	14'-9	25'-6		944 S.F.
105'	12'-0	13'-0		948 S.F.
110'	12'-0	15'-6		948 S.F.
115'	12'-0	18'-0		948 S.F.

OFFSET				
SPAN	MAX. SIGN HEIGHT	MIN. LEFT END DIST.	MIN. RIGHT END DIST.	MAX. SIGN AREA
L	H	E_1	E_2	A
105'	19'-0	10'-0	62'-0	627 S.F.
105'	19'-0	15'-0	54'-0	684 S.F.
110'	19'-0	10'-0	68'-0	608 S.F.
110'	19'-0	15'-0	60'-0	665 S.F.
115'	19'-0	10'-0	73'-0	608 S.F.
115'	19'-0	15'-0	66'-0	646 S.F.
105'	14'-9	10'-0	48'-0	693 S.F.
105'	14'-9	15'-0	37'-0	782 S.F.
110'	14'-9	10'-0	54'-0	679 S.F.
110'	14'-9	15'-0	45'-0	738 S.F.
115'	14'-9	10'-0	61'-0	649 S.F.
115'	14'-9	15'-0	51'-0	723 S.F.
105'	12'-0	10'-0	27'-0	816 S.F.
110'	12'-0	10'-0	36'-0	768 S.F.
115'	12'-0	10'-0	45'-0	720 S.F.
115'	12'-0	15'-0	29'-0	852 S.F.

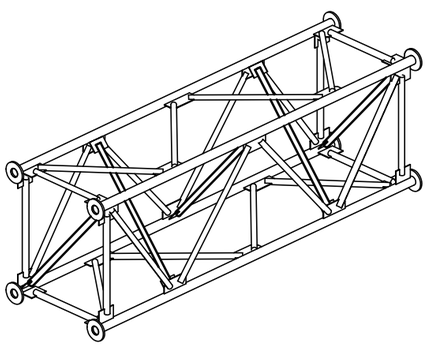

ISOMETRIC VIEW TYPICAL TRUSS UNIT

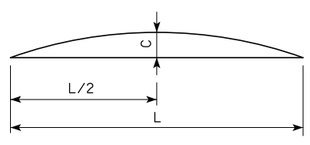

CAMBER DIAGRAM

SPAN L	CAMBER C
105'	$2\frac{1}{4}$
110'	$2\frac{1}{2}$
115'	$2\frac{3}{4}$

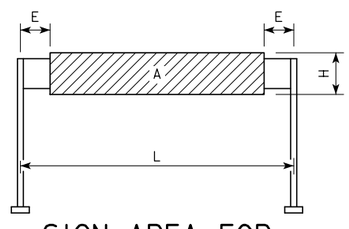

SIGN AREA FOR STEEL OVERHEAD SIGN TRUSS

CENTERED

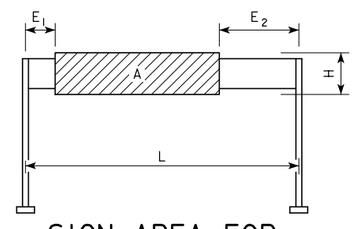

SIGN AREA FOR STEEL OVERHEAD SIGN TRUSS

OFFSET

SIGN OFFSET MAY BE MIRRORED (E_1 AND E_2 VALUES REVERSED).

NOTE: SEE STANDARD SHEET SOST-08-11 FOR SECTION A-A AND DETAILS A, B, C AND D.

LATEST REVISION DATE

APPROVED BY BRIDGE ENGINEER

Iowa Department of Transportation
Highway Division

STANDARD DESIGN

STEEL OVERHEAD SIGN TRUSS

SEPTEMBER, 2011

ELEVATION VIEWS FOR TRUSS SPANS

105'-115' SPANS

SOST-04-11

STEELOVERHEADSIGNTRUSS.DGN - SOST-04-11 - THIS SHEET ISSUED 09-11.

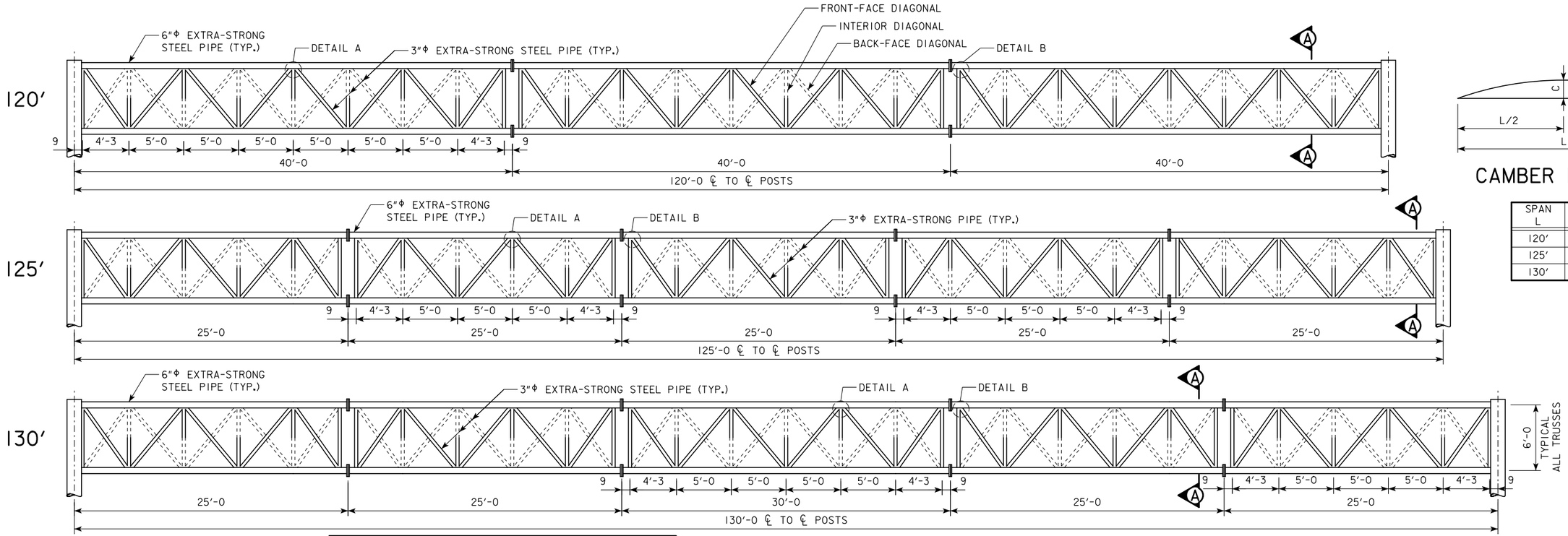

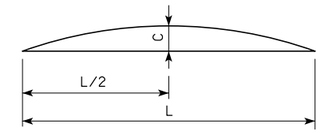

CAMBER DIAGRAM

SPAN L	CAMBER C
120′	3
125′	$3\frac{1}{4}$
130′	$3\frac{5}{8}$

PART ELEVATION VIEWS

GUSSET PLATES NOT SHOWN

NOTE:
BACK-FACE DIAGONALS AND BOTTOM-FACE DIAGONALS ARE SHOWN WITH DASHED LINES. INTERIOR DIAGONALS ARE SHOWN SOLID NEAR THE FRONT FACE AND TOP FACE. INTERIOR DIAGONALS ARE SHOWN DASHED TOWARDS THE BACK FACE AND BOTTOM FACE.

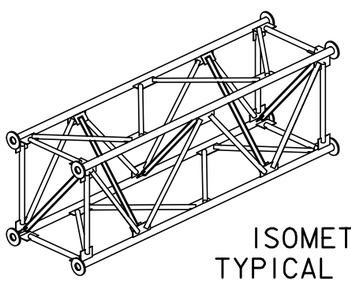

ISOMETRIC VIEW TYPICAL TRUSS UNIT

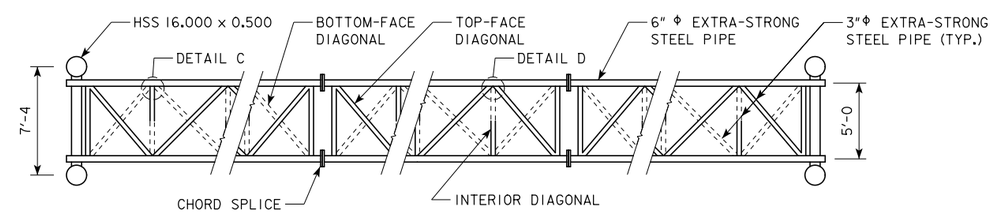

PART TOP VIEW

NOTE: INTERIOR DIAGONALS HAVE SAME ORIENTATION AT CHORD SPLICE LOCATIONS

NOTE: SEE STANDARD SHEET SOST-08-11 FOR SECTION A-A AND DETAILS A, B, C AND D.

ALLOWABLE SIGN AREA

CENTERED

SPAN	MAX. SIGN HEIGHT	MIN. END DIST.		MAX. SIGN AREA
L	H	E		A
120′	19′-0	35′-0		950 S.F.
125′	19′-0	37′-6		950 S.F.
130′	19′-0	40′-0		950 S.F.
120′	14′-9	28′-0		944 S.F.
125′	14′-9	30′-6		944 S.F.
130′	14′-9	33′-0		944 S.F.
120′	12′-0	20′-6		948 S.F.
125′	12′-0	23′-0		948 S.F.
130′	12′-0	25′-6		948 S.F.

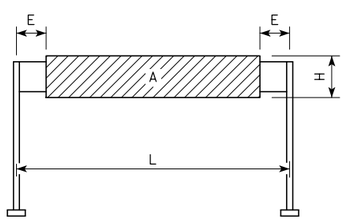

SIGN AREA FOR STEEL OVERHEAD SIGN TRUSS

CENTERED

ALLOWABLE SIGN AREA

OFFSET

SPAN	MAX. SIGN HEIGHT	MIN. LEFT END DIST.	MIN. RIGHT END DIST.	MAX. SIGN AREA
L	H	E_1	E_2	A
120′	19′-0	10′-0	79′-0	589 S.F.
120′	19′-0	20′-0	64′-0	684 S.F.
125′	19′-0	10′-0	84′-0	589 S.F.
125′	19′-0	20′-0	70′-0	665 S.F.
130′	19′-0	10′-0	90′-0	570 S.F.
130′	19′-0	20′-0	75′-0	665 S.F.
120′	14′-9	10′-0	67′-0	634 S.F.
120′	14′-9	20′-0	48′-0	767 S.F.
125′	14′-9	10′-0	72′-0	634 S.F.
125′	14′-9	20′-0	55′-0	738 S.F.
130′	14′-9	10′-0	78′-0	620 S.F.
130′	14′-9	20′-0	62′-0	708 S.F.
120′	12′-0	10′-0	51′-0	708 S.F.
120′	12′-0	20′-0	23′-0	924 S.F.
125′	12′-0	10′-0	58′-0	684 S.F.
125′	12′-0	20′-0	34′-0	852 S.F.
130′	12′-0	10′-0	65′-0	660 S.F.
130′	12′-0	20′-0	43′-0	804 S.F.

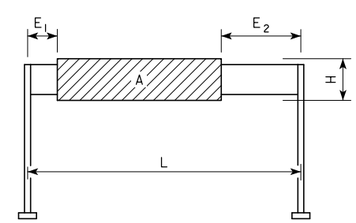

SIGN AREA FOR STEEL OVERHEAD SIGN TRUSS

OFFSET

SIGN OFFSET MAY BE MIRRORED (E_1 AND E_2 VALUES REVERSED).

LATEST REVISION DATE

APPROVED BY BRIDGE ENGINEER

Iowa Department of Transportation
Highway Division

STANDARD DESIGN

STEEL OVERHEAD SIGN TRUSS

SEPTEMBER, 2011

ELEVATION VIEWS FOR TRUSS SPANS
120′-130′ SPANS

SOST-05-11

STEELOVERHEADSIGNTRUSS.DGN - SOST-05-11 - THIS SHEET ISSUED 09-11.

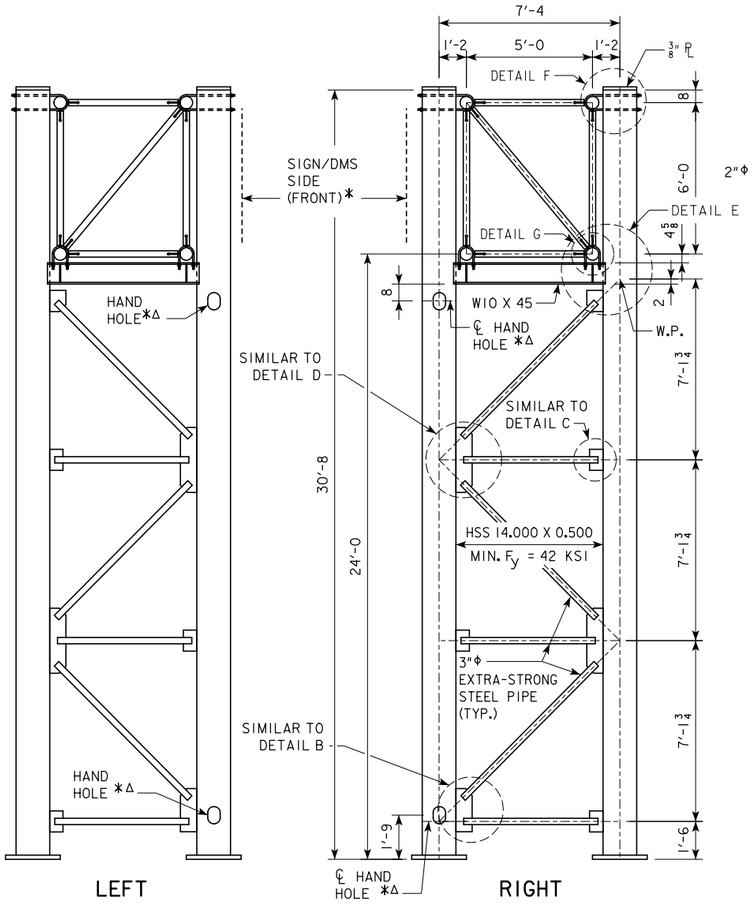

END VIEW OF TRUSS SUPPORTS

Δ - HAND HOLES SHALL BE LOCATED ONLY IN POSTS THAT ARE CLOSEST TO DYNAMIC MESSAGE SIGN AND BE POSITIONED ON SIDE OPPOSITE TRAFFIC

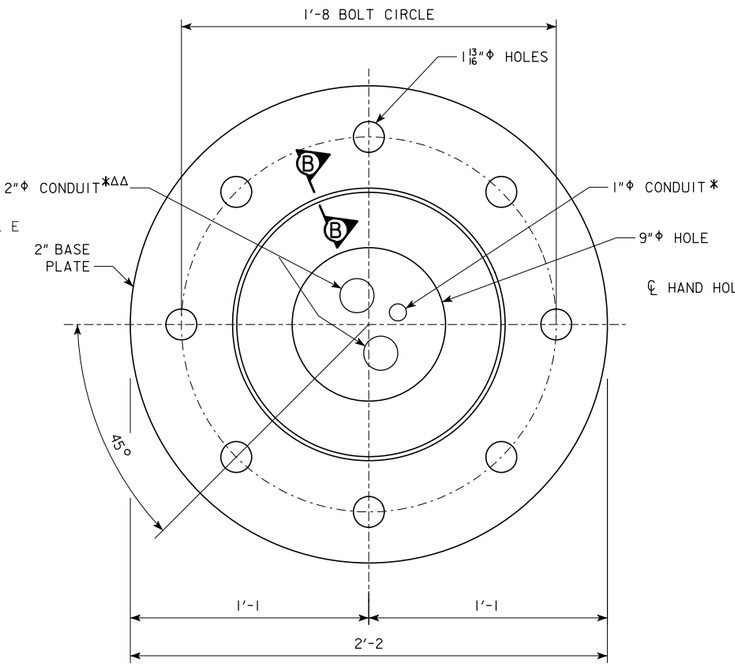

BASE PLATE PLAN

ΔΔ - CONDUITS ARE PRESENT ONLY IN POSTS WITH HAND HOLES

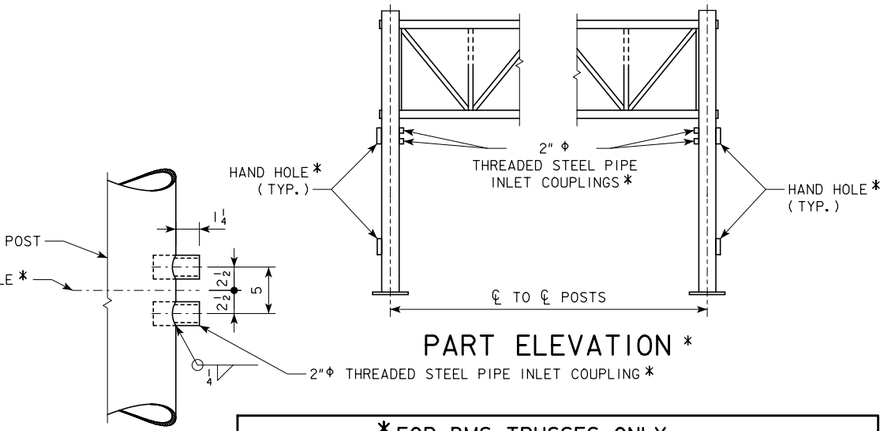

PART ELEVATION *

ELECTRICAL INLET *

*FOR DMS TRUSSES ONLY

HAND HOLES, CONDUIT, AND PIPE INLET COUPLINGS ARE TO BE INCLUDED ON DMS TRUSS DESIGNS ONLY. SEE STANDARD SHEET SOST-18-11 FOR FOUNDATION CONDUIT LOCATION DETAILS.

HAND HOLES AND ELECTRICAL INLET HOLES SHALL BE LOCATED IN BOTH TRUSS SUPPORTS UNLESS OTHERWISE INDICATED ON DETAIL PROJECT PLANS. LOCATE HOLES ONLY IN POSTS THAT ARE CLOSEST TO DYNAMIC MESSAGE SIGN.

THREADED STEEL PIPE INLET COUPLINGS ARE TO BE PLACED OPPOSITE TO UPPER HAND HOLE ON POST. COUPLINGS SHALL BE FITTED WITH STANDARD PLUGS UNTIL CONDUIT IS INSTALLED.

ALL CONDUIT SHALL BE SCHEDULE 40 PLASTIC.

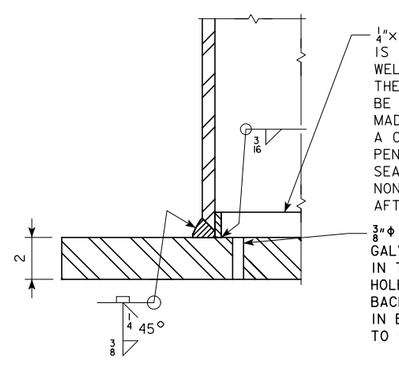

SECTION B-B

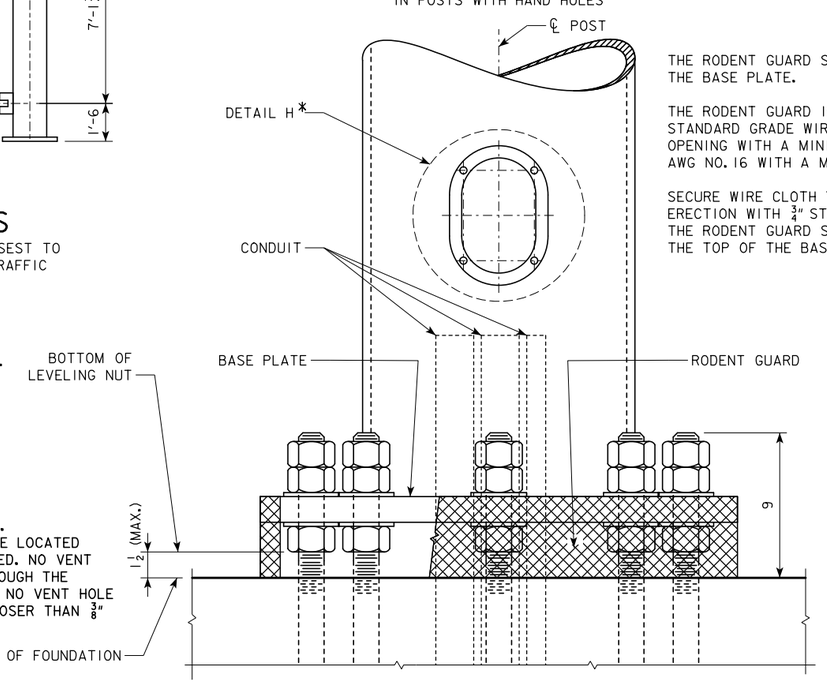

THE RODENT GUARD SHALL BE PLACED AROUND THE BASE PLATE.

THE RODENT GUARD IS STAINLESS STEEL STANDARD GRADE WIRE CLOTH, 1/4" MAXIMUM OPENING WITH A MINIMUM WIRE DIAMETER OF AWG NO. 16 WITH A MINIMUM 2" LAP.

SECURE WIRE CLOTH TO BASE PLATE AFTER ERECTION WITH 3/4" STAINLESS STEEL BANDING. THE RODENT GUARD SHALL NOT EXTEND ABOVE THE TOP OF THE BASE PLATE.

BASE SIDE VIEW

OPPOSITE OF TRAFFIC SIDE

NOTE: SEE STANDARD SHEET SOST-08-11 FOR DETAILS B, C, D, AND E.

NOTE: SEE STANDARD SHEET SOST-09-11 FOR DETAILS F AND G.

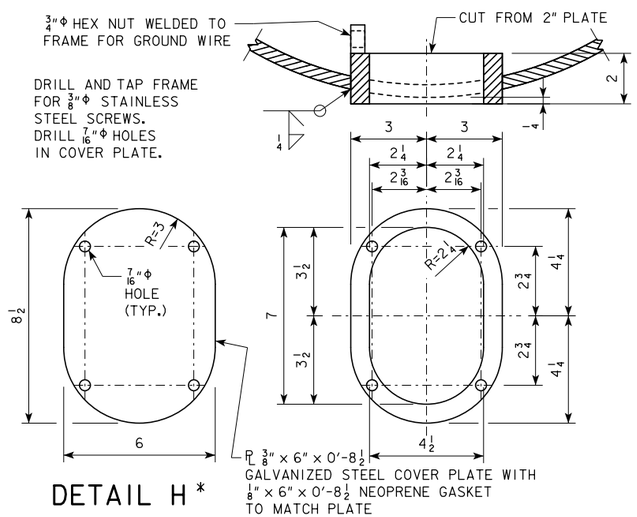

DETAIL H *

09-14
LATEST REVISION DATE

APPROVED BY BRIDGE ENGINEER

IOWA DOT Highway Division

STANDARD DESIGN

STEEL OVERHEAD SIGN TRUSS

SEPTEMBER, 2011

SUPPORT POST BASE AND DMS ELECTRICAL ACCESS DETAILS

50'-100' SPANS

SOST-06-11

REVISION: 09-14 - MODIFIED NOTES.
STEELOVERHEADSIGNTRUSS.DGN - SOST-06-11 - THIS SHEET ISSUED 09-11.

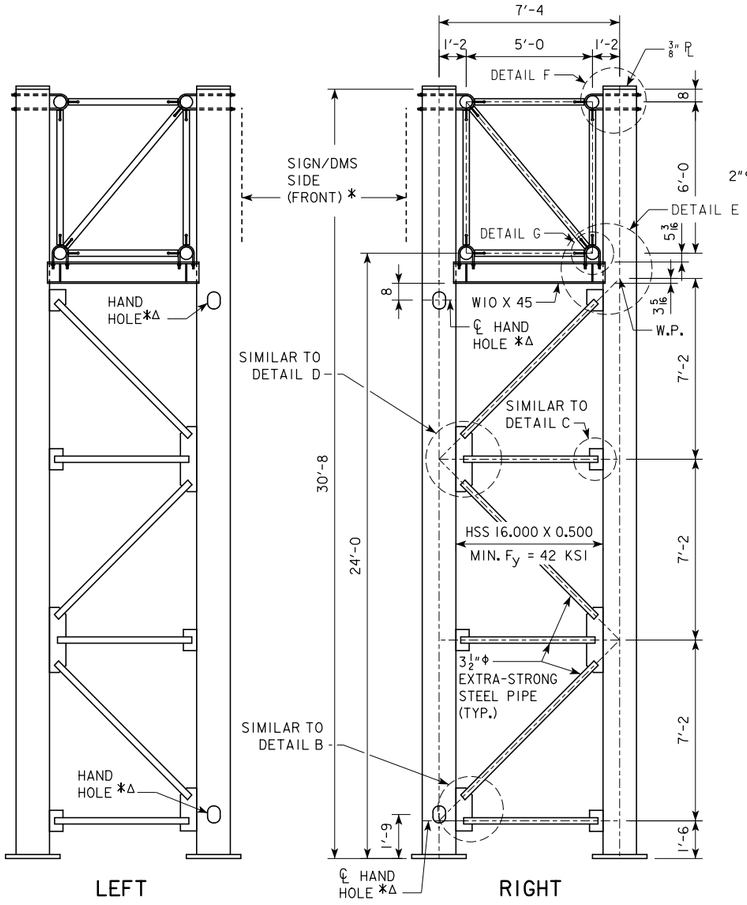

END VIEW OF TRUSS SUPPORTS

Δ - HAND HOLES SHALL BE LOCATED ONLY IN POSTS THAT ARE CLOSEST TO DYNAMIC MESSAGE SIGN AND BE POSITIONED ON SIDE OPPOSITE TRAFFIC

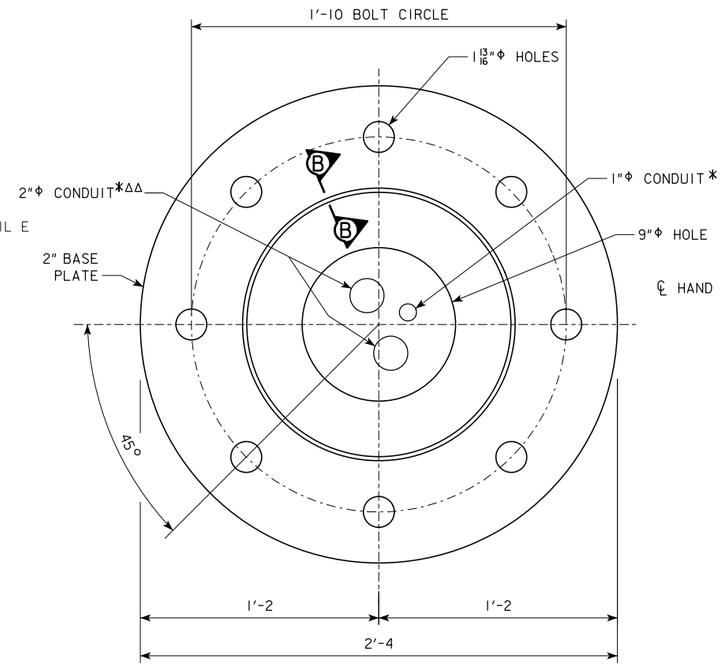

BASE PLATE PLAN

ΔΔ - CONDUITS ARE PRESENT ONLY IN POSTS WITH HAND HOLES

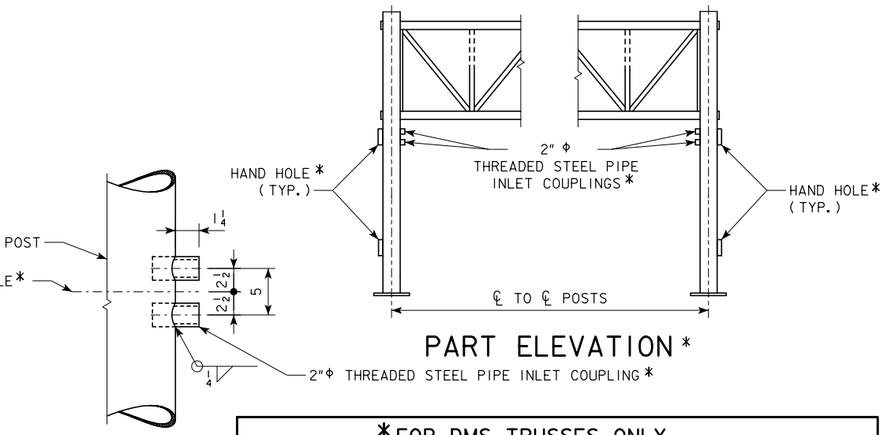

PART ELEVATION *

ELECTRICAL INLET *

* FOR DMS TRUSSES ONLY

HAND HOLES, CONDUIT, AND PIPE INLET COUPLINGS ARE TO BE INCLUDED ON DMS TRUSS DESIGNS ONLY. SEE STANDARD SHEET SOST-18-11 FOR FOUNDATION CONDUIT LOCATION DETAILS.

HAND HOLES AND ELECTRICAL INLET HOLES SHALL BE LOCATED IN BOTH TRUSS SUPPORTS UNLESS OTHERWISE INDICATED ON DETAIL PROJECT PLANS. LOCATE HOLES ONLY IN POSTS THAT ARE CLOSEST TO DYNAMIC MESSAGE SIGN.

THREADED STEEL PIPE INLET COUPLINGS ARE TO BE PLACED OPPOSITE TO UPPER HAND HOLE ON POST. COUPLINGS SHALL BE FITTED WITH STANDARD PLUGS UNTIL CONDUIT IS INSTALLED.

ALL CONDUIT SHALL BE SCHEDULE 40 PLASTIC.

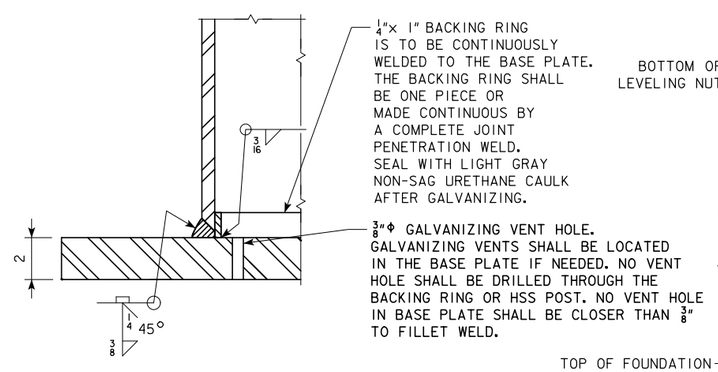

SECTION B-B

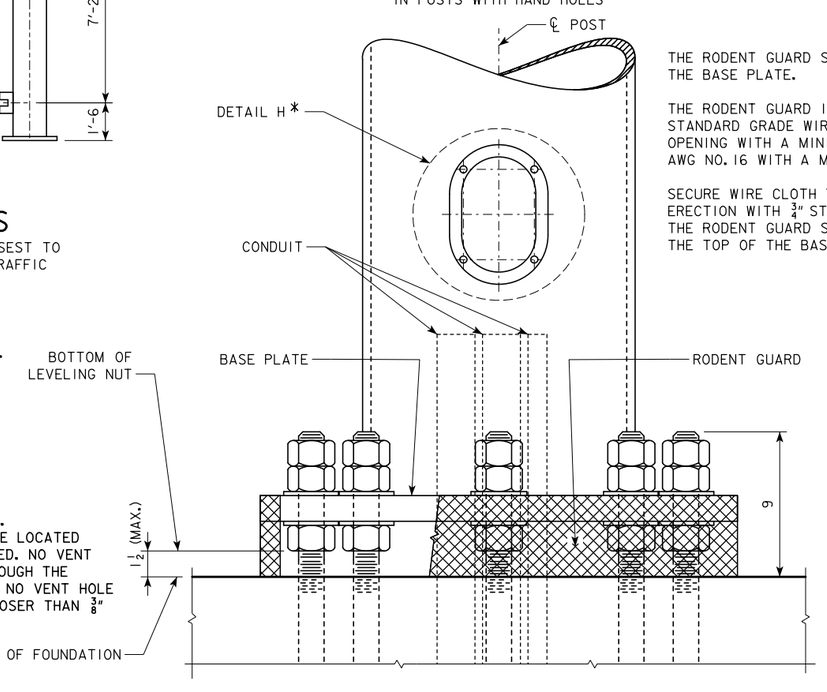

THE RODENT GUARD SHALL BE PLACED AROUND THE BASE PLATE.

THE RODENT GUARD IS STAINLESS STEEL STANDARD GRADE WIRE CLOTH, 1/4" MAXIMUM OPENING WITH A MINIMUM WIRE DIAMETER OF AWG NO. 16 WITH A MINIMUM 2" LAP.

SECURE WIRE CLOTH TO BASE PLATE AFTER ERECTION WITH 3/4" STAINLESS STEEL BANDING. THE RODENT GUARD SHALL NOT EXTEND ABOVE THE TOP OF THE BASE PLATE.

BASE SIDE VIEW

OPPOSITE OF TRAFFIC SIDE

NOTE: SEE STANDARD SHEET SOST-08-11 FOR DETAILS B, C, D, AND E.

NOTE: SEE STANDARD SHEET SOST-09-11 FOR DETAILS F AND G.

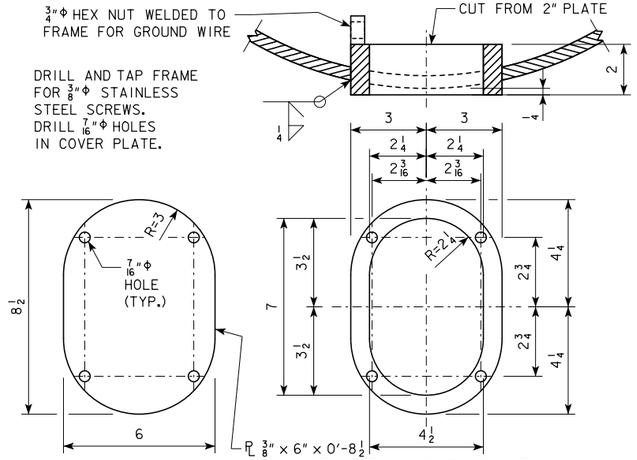

DETAIL H *

09-14 LATEST REVISION DATE	IOWA DOT Highway Division
APPROVED BY BRIDGE ENGINEER	STANDARD DESIGN
	STEEL OVERHEAD SIGN TRUSS
	SEPTEMBER, 2011
	SUPPORT POST BASE AND DMS ELECTRICAL ACCESS DETAILS — 105'-130' SPANS
	SOST-07-11

REVISION: 09-14 - MODIFIED NOTES.
STEELOVERHEADSIGNTRUSS.DGN - SOST-06-11 - THIS SHEET ISSUED 09-11.

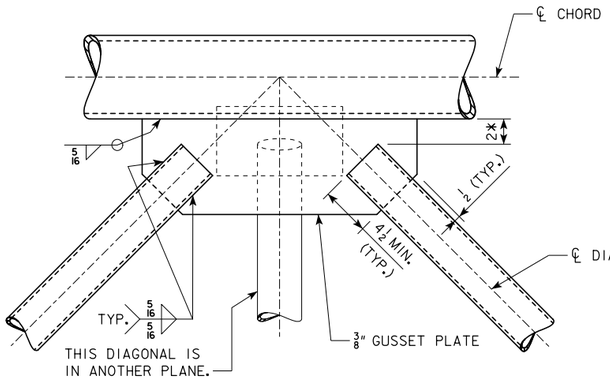

DETAIL A

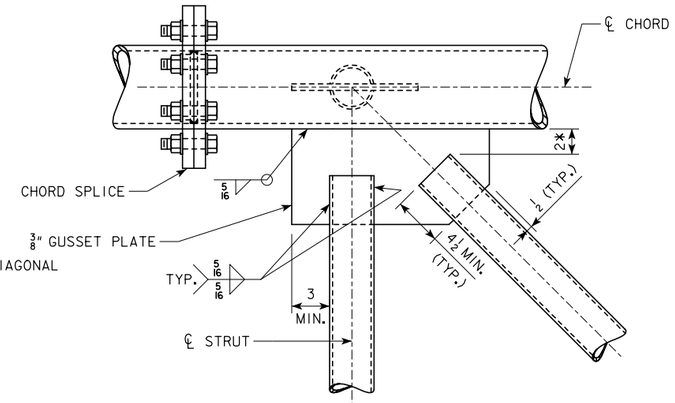

DETAIL B

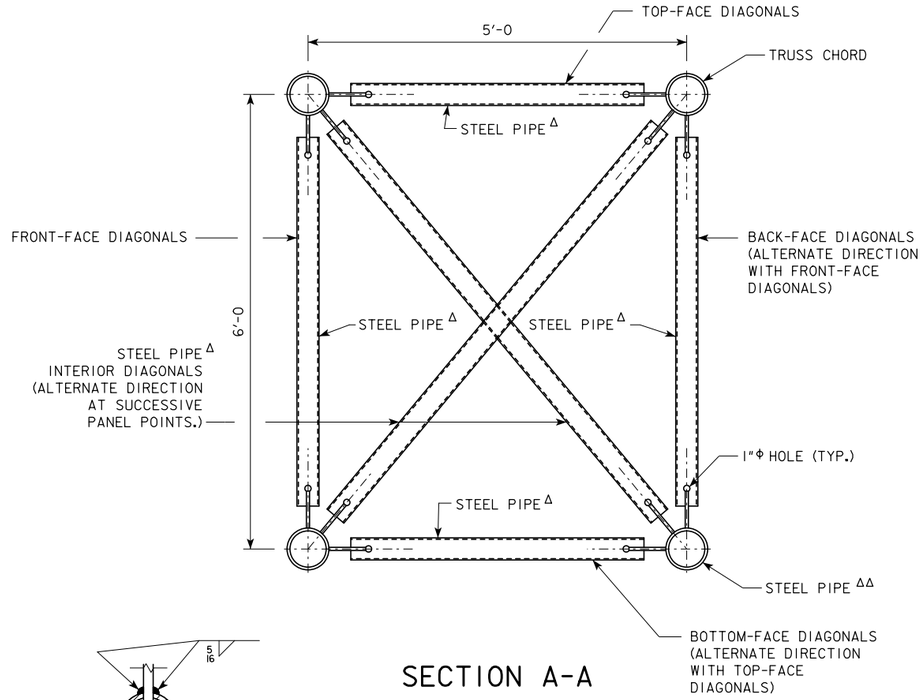

SECTION A-A

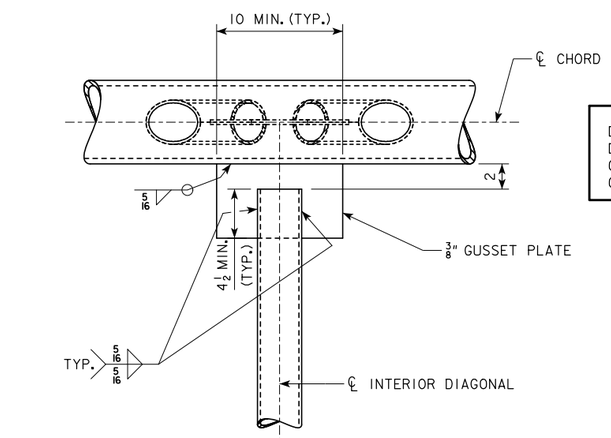

DETAIL C

DETAIL A, DETAIL B, DETAIL C AND DETAIL D SHOW CONNECTIONS AT TOP CHORDS. CONNECTIONS AT BOTTOM CHORDS ARE SIMILAR.

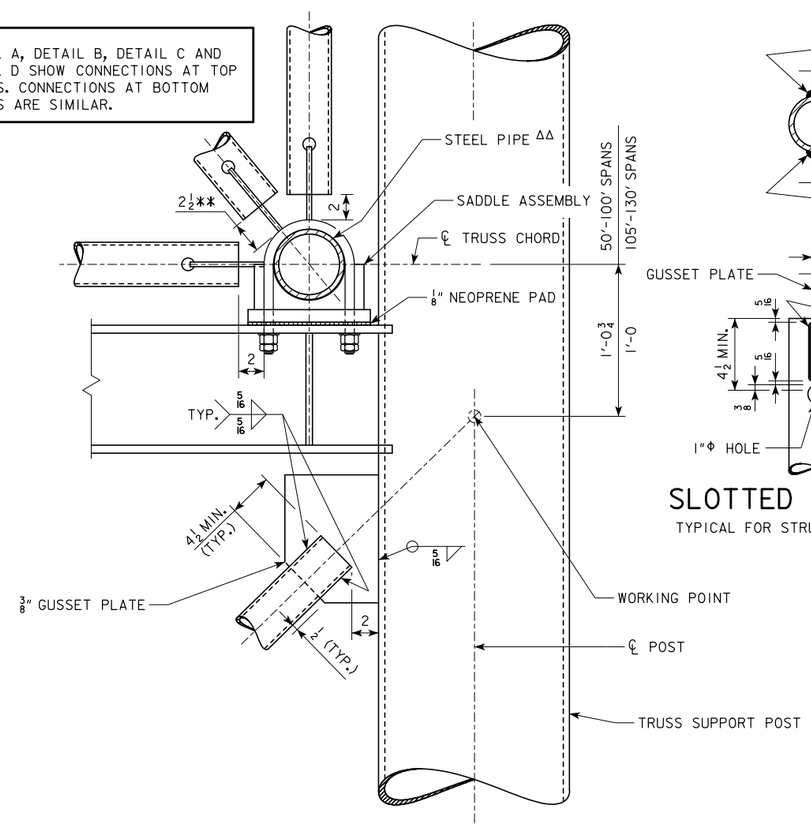

DETAIL E

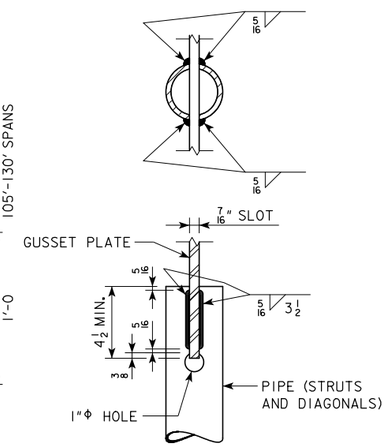

SLOTTED PIPE ENDS

TYPICAL FOR STRUTS AND DIAGONALS

TRUSS PIPE DETAILS		
SPAN	Δ TRUSS DIAGONALS	ΔΔ TRUSS CHORDS
50'-100'	3"Φ STANDARD STEEL PIPE	5"Φ EXTRA-STRONG STEEL PIPE
105'-130'	3"Φ EXTRA-STRONG STEEL PIPE	6"Φ EXTRA-STRONG STEEL PIPE

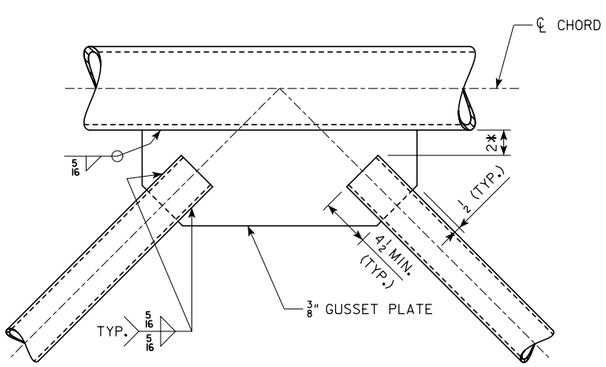

DETAIL D

* THIS DIMENSION MAY BE REDUCED BY 3/16" TO ALLOW FOR THE USE OF 8"-WIDE BAR STOCK TO FABRICATE GUSSET PLATES.

** USE 2 1/2" ONLY FOR INTERIOR DIAGONALS AT END OF EACH TRUSS UNIT. USE 2" FOR OTHER INTERIOR-DIAGONAL-TO-CHORD CONNECTIONS (I.E., "DETAIL C") AND STRUT-TO-POST CONNECTIONS (I.E., "SIMILAR TO DETAIL C").

NOTE: SEE STANDARD SHEETS SOST-02-11, SOST-03-11, SOST-04-11 AND SOST-05-11 FOR LOCATIONS OF SECTION A-A AND DETAILS A, B, C, AND D.

NOTE: SEE STANDARD SHEETS SOST-06-11 AND SOST-07-11 FOR LOCATIONS OF DETAILS THAT ARE SIMILAR TO DETAILS B, C, AND D AND LOCATION OF DETAIL E.

09-14
LATEST REVISION DATE

APPROVED BY BRIDGE ENGINEER

IOWA DOT Highway Division

STANDARD DESIGN

STEEL OVERHEAD SIGN TRUSS

SEPTEMBER, 2011

GUSSET PLATE CONNECTIONS
50'-130' SPANS

SOST-08-11

REVISION: 09-14 - MODIFIED GUSSET PLATE CONNECTION DETAILS.
STEELOVERHEADSIGNTRUSS.DGN - SOST-08-11 - THIS SHEET ISSUED 09-11.

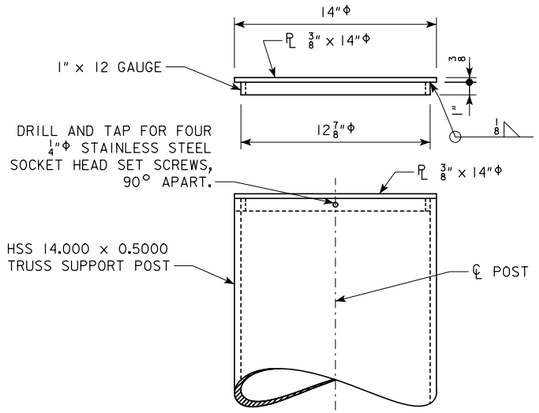

POST TOP DETAIL

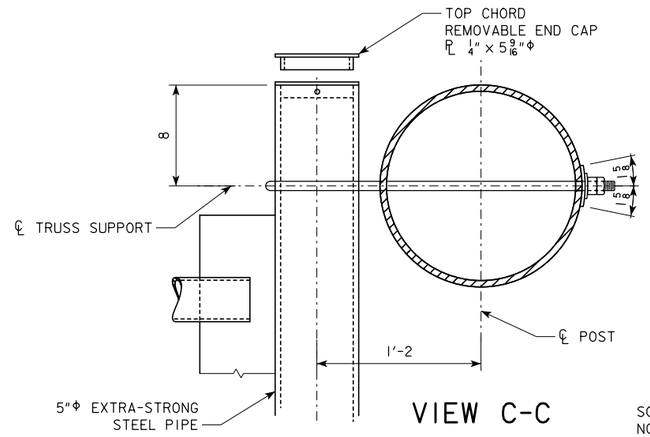

VIEW C-C

SOME HIDDEN LINES NOT SHOWN FOR CLARITY

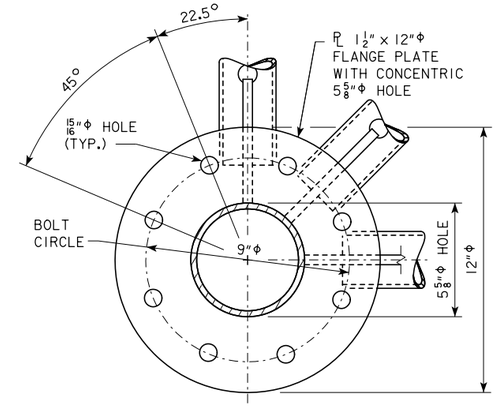

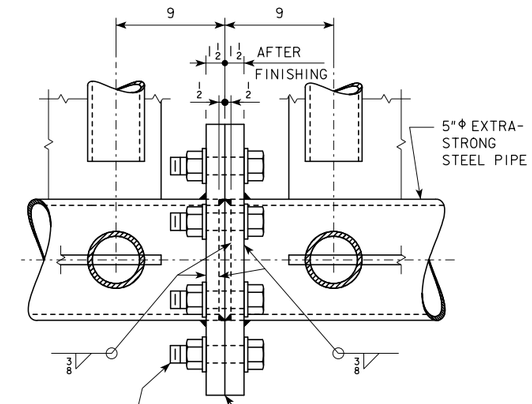

7/8"Φ x 4 3/4" A325 GALVANIZED BOLT WITH WASHERS AND NUT (TYP). 32 BOLTS, 64 WASHERS, AND 32 NUTS REQUIRED PER TRUSS SPLICE. PROVIDE A WASHER UNDER EACH BOLT HEAD AND EACH NUT. TENSION GALVANIZED STEEL FASTENERS BY TURN-OF-NUT METHOD.

IF NECESSARY, PLANE ABUTTING FACES TO ENSURE COMPLETE CONTACT.

NOTE:
SECURE PROPER ALIGNMENT AFTER FINISHING, THEN WELD FLANGE PLATES TO CHORD MEMBERS.

CHORD SPLICE

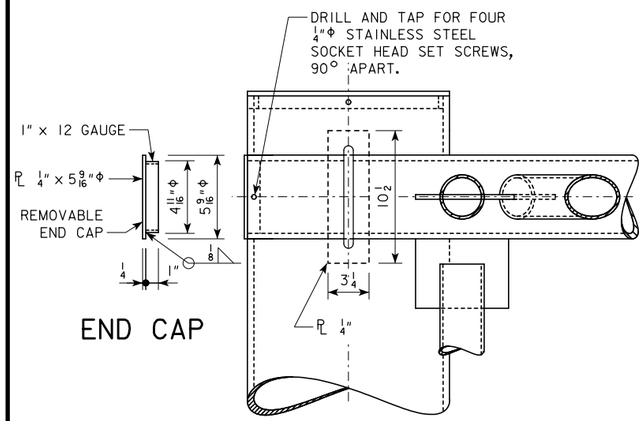

END CAP

VIEW D-D

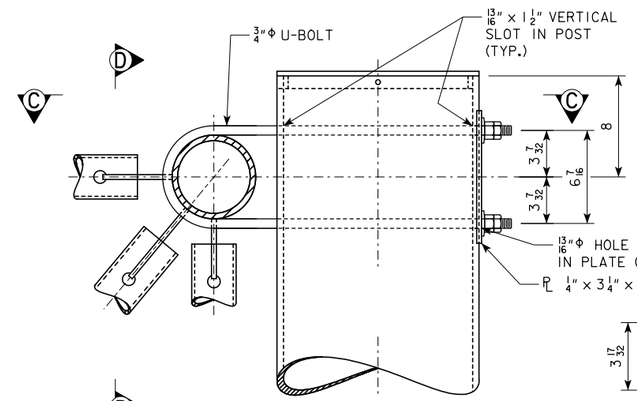

DETAIL F
TOP CHORD

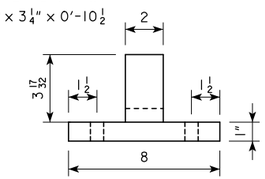

SADDLE END VIEW

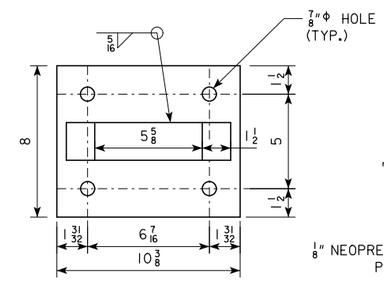

SADDLE PLAN VIEW

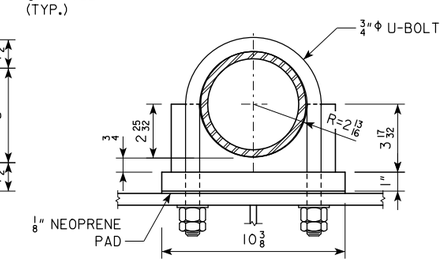

SADDLE SIDE VIEW

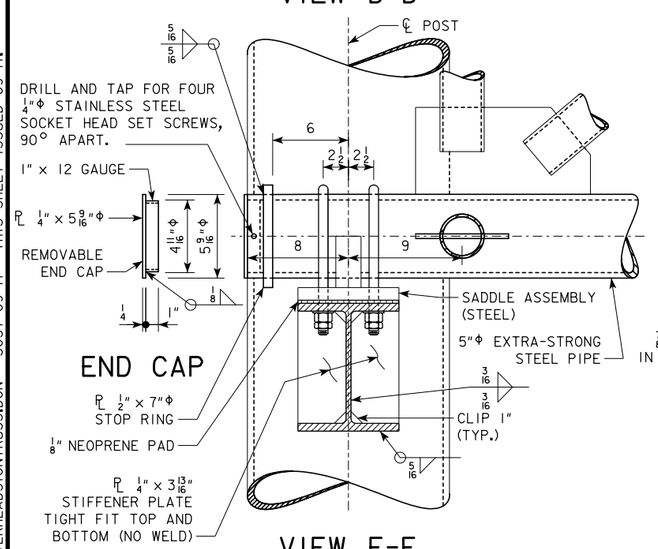

END CAP

VIEW E-E

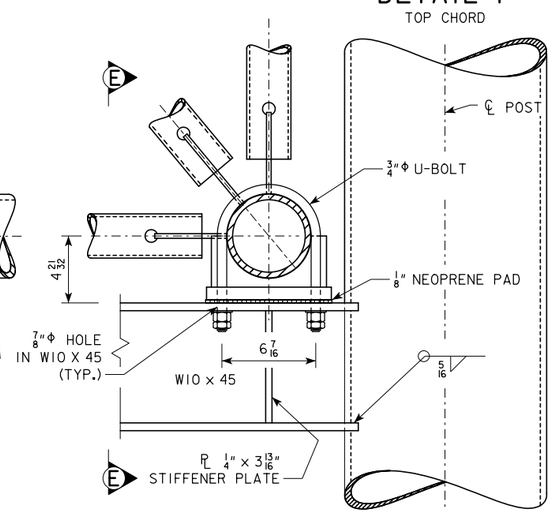

DETAIL G
BOTTOM CHORD

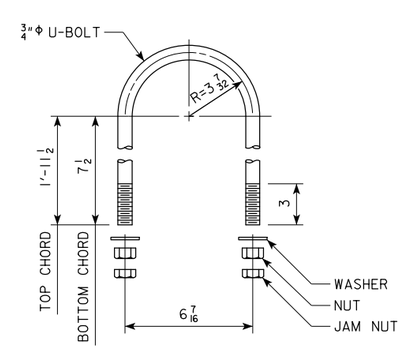

U-BOLT DETAIL

NOTE: SEE STANDARD SHEET SOST-06-11 FOR LOCATION OF DETAILS F AND G.

09-14
LATEST REVISION DATE

APPROVED BY BRIDGE ENGINEER

IOWA DOT Highway Division

STANDARD DESIGN

STEEL OVERHEAD SIGN TRUSS

SEPTEMBER, 2011

TRUSS SUPPORT AND CHORD SPLICE DETAILS
50'-100' SPANS

SOST-09-11

REVISION: 09-14 - MODIFIED DEPICTION OF INTERIOR DIAGONAL AT END OF TRUSS.
STEELOVERHEADSIGNTRUSS.DGN - SOST-09-11 - THIS SHEET ISSUED 09-11.

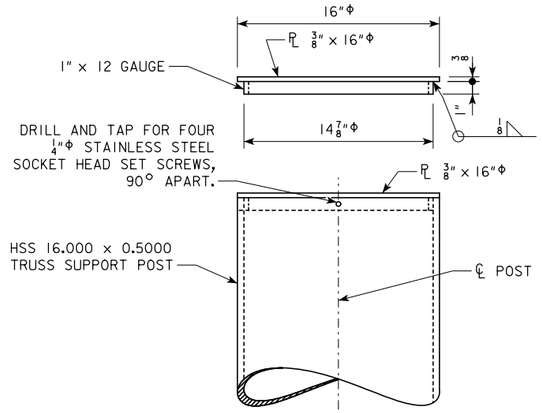

POST TOP DETAIL

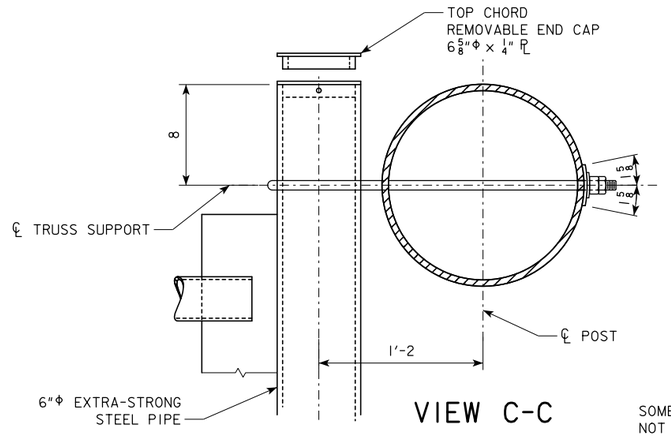

VIEW C-C

SOME HIDDEN LINES NOT SHOWN FOR CLARITY

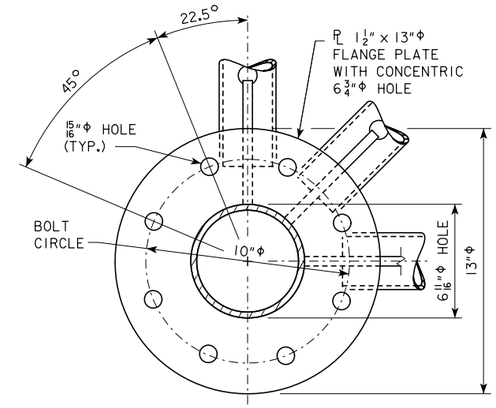

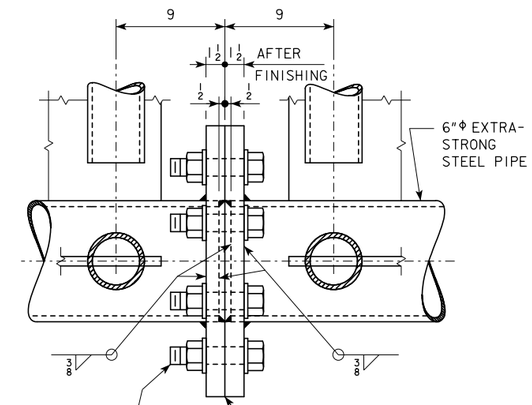

7/8"Φ x 4 3/4" A325 GALVANIZED BOLT WITH WASHERS AND NUT (TYP). 32 BOLTS, 64 WASHERS, AND 32 NUTS REQUIRED PER TRUSS SPLICE. PROVIDE A WASHER UNDER EACH BOLT HEAD AND EACH NUT. TENSION GALVANIZED STEEL FASTENERS BY TURN-OF-NUT METHOD.

IF NECESSARY, PLANE ABUTTING FACES TO ENSURE COMPLETE CONTACT.

NOTE:
SECURE PROPER ALIGNMENT AFTER FINISHING, THEN WELD FLANGE PLATES TO CHORD MEMBERS.

CHORD SPLICE

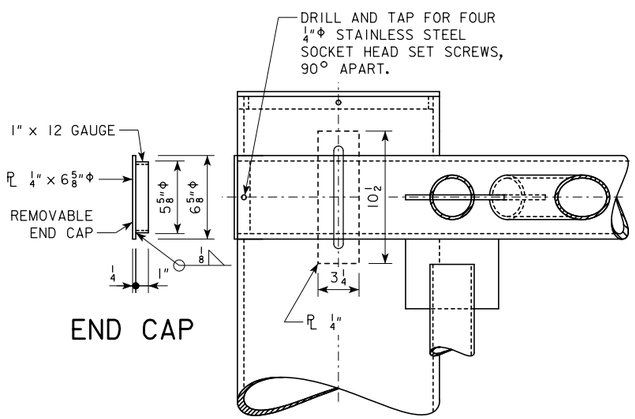

END CAP

VIEW D-D

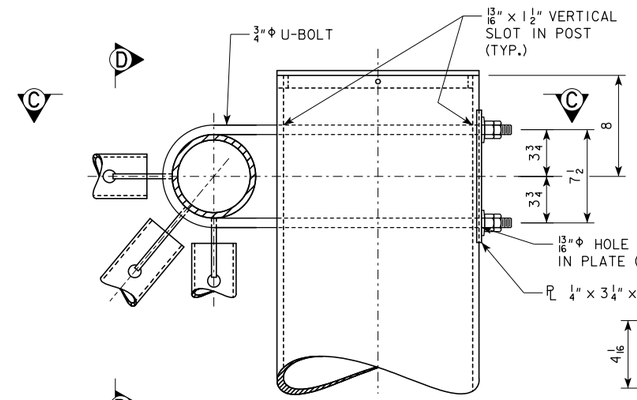

DETAIL F
TOP CHORD

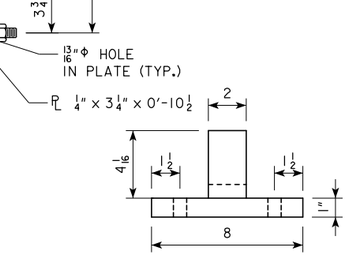

SADDLE END VIEW

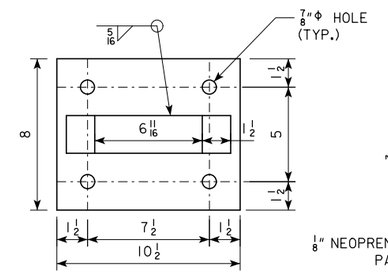

SADDLE PLAN VIEW

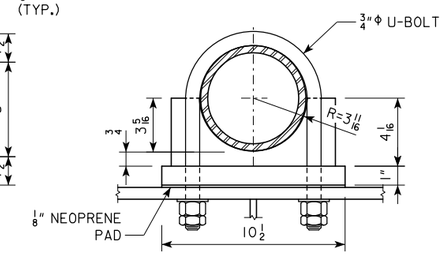

SADDLE SIDE VIEW

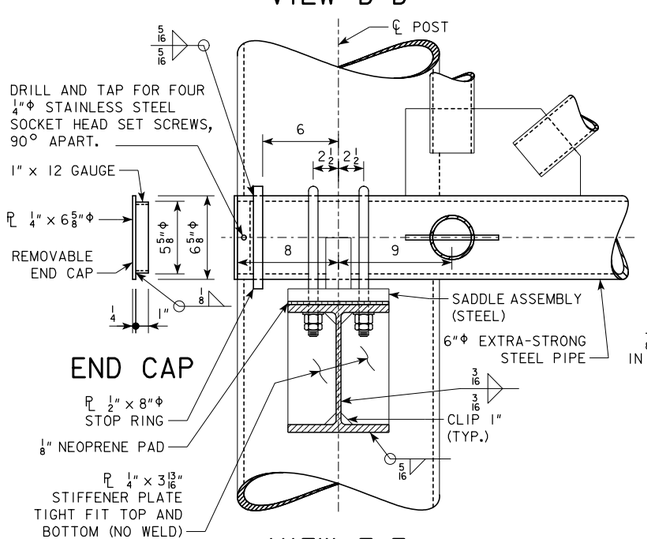

END CAP

VIEW E-E

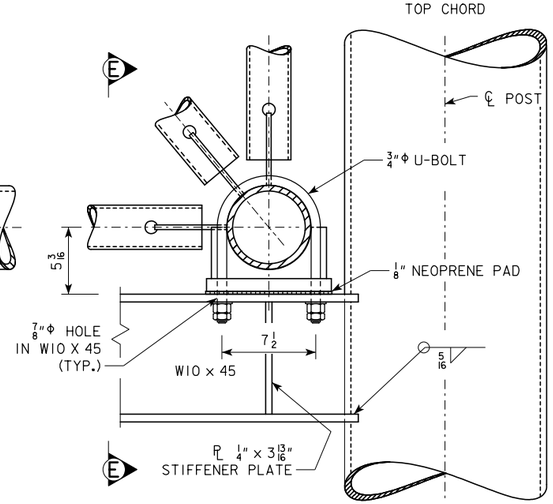

DETAIL G
BOTTOM CHORD

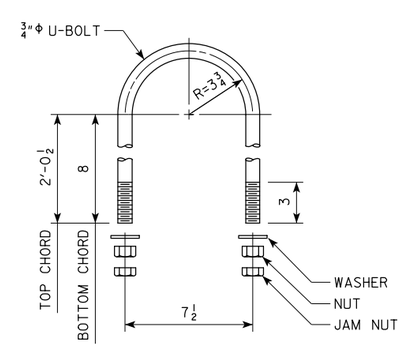

U-BOLT DETAIL

NOTE: SEE STANDARD SHEET SOST-07-11 FOR LOCATION OF DETAILS F AND G.

09-14
LATEST REVISION DATE

APPROVED BY BRIDGE ENGINEER

IOWA DOT Highway Division

STANDARD DESIGN

STEEL OVERHEAD SIGN TRUSS

SEPTEMBER, 2011

TRUSS SUPPORT AND CHORD SPLICE DETAILS
105'-130' SPANS

SOST-10-11

REVISION: 09-14 - MODIFIED DEPICTION OF INTERIOR DIAGONAL AT END OF TRUSS. INCREASED DIAMETER OF CHORD SPLICE FLANGE PLATE HOLE. INCREASED OUTSIDE DIAMETER OF CHORD STOP RING.
STEELOVERHEADSIGNTRUSS.DGN - SOST-10-11 - THIS SHEET ISSUED 09-11.

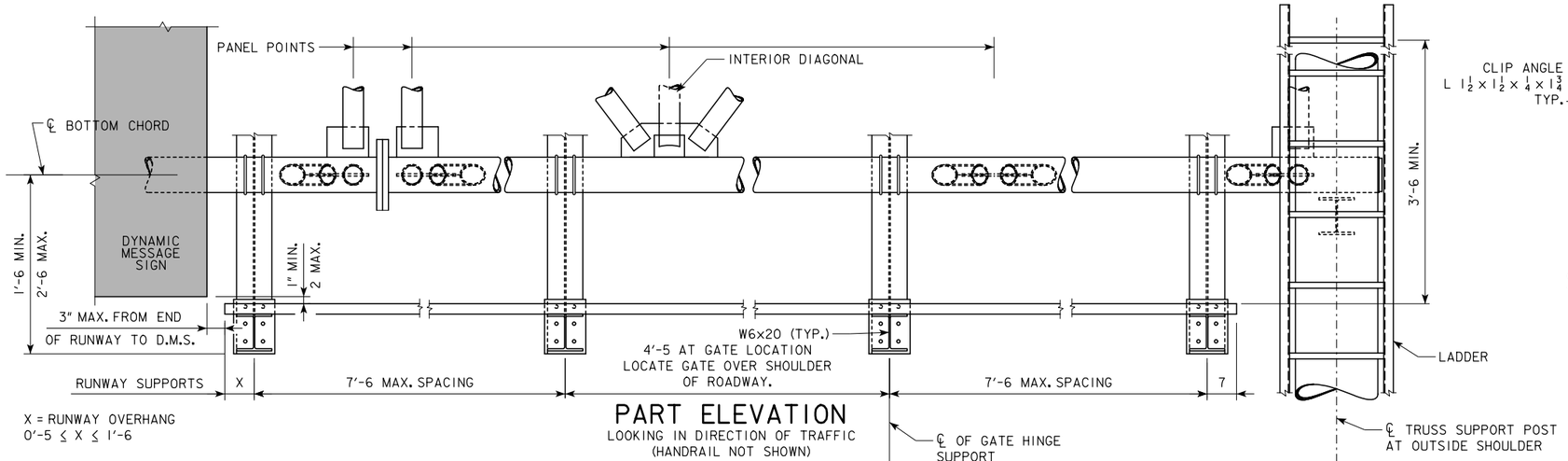

PART ELEVATION

LOOKING IN DIRECTION OF TRAFFIC
(HANDRAIL NOT SHOWN)

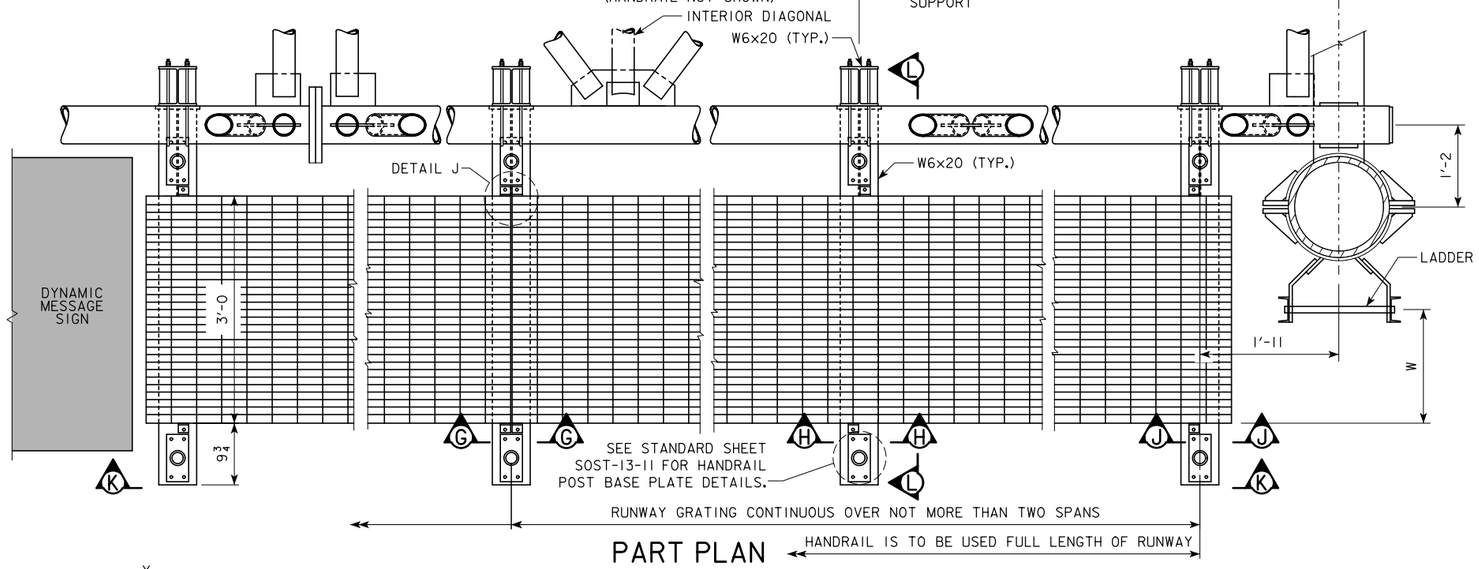

PART PLAN

(HANDRAIL NOT SHOWN)

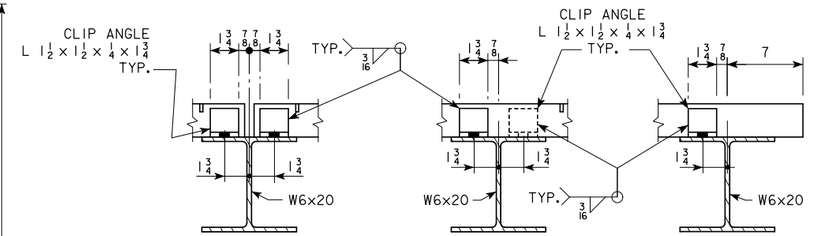

SECTION G-G SECTION H-H SECTION J-J

NOTES:

DRILL 9/16"Φ HOLE IN CLIP ANGLE AND 9/16" x 1" SLOTTED HOLE IN W6x20 FOR 1/2"Φ A325 GALVANIZED BOLT WITH WASHERS, NUT, AND JAM NUT. ADJUST CLIP SO GRATING BEARS ON BEAM.

THE GALVANIZED STEEL BAR GRATING INCLUDING BEARING BAR, CROSS BARS, AND BANDING BARS SHALL COMPLY WITH THE REQUIREMENTS OF ASTM A1011 TYPE 2.

DIMENSION TABLE		
SPAN	TRUSS SUPPORT POST	W
50' - 100'	HSS 14.000 x 0.500	1'-10 7/8
105' - 130'	HSS 16.000 x 0.500	1'-8 11/16

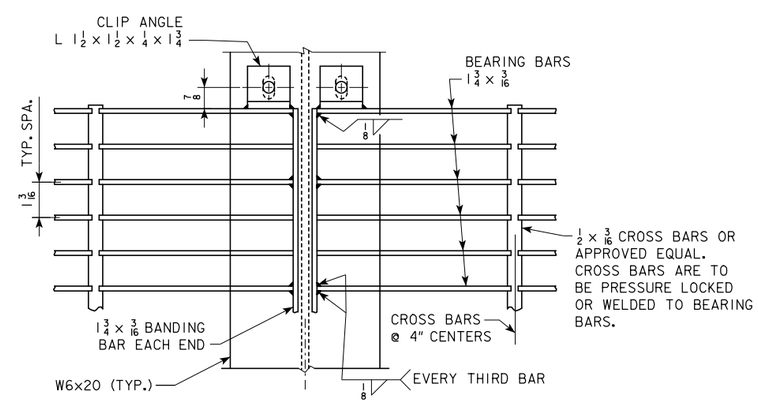

DETAIL J

NOTE: SEE STANDARD SHEET SOST-13-11 FOR SECTION L-L.
NOTE: SEE STANDARD SHEET SOST-15-11 FOR LADDER DETAILS.

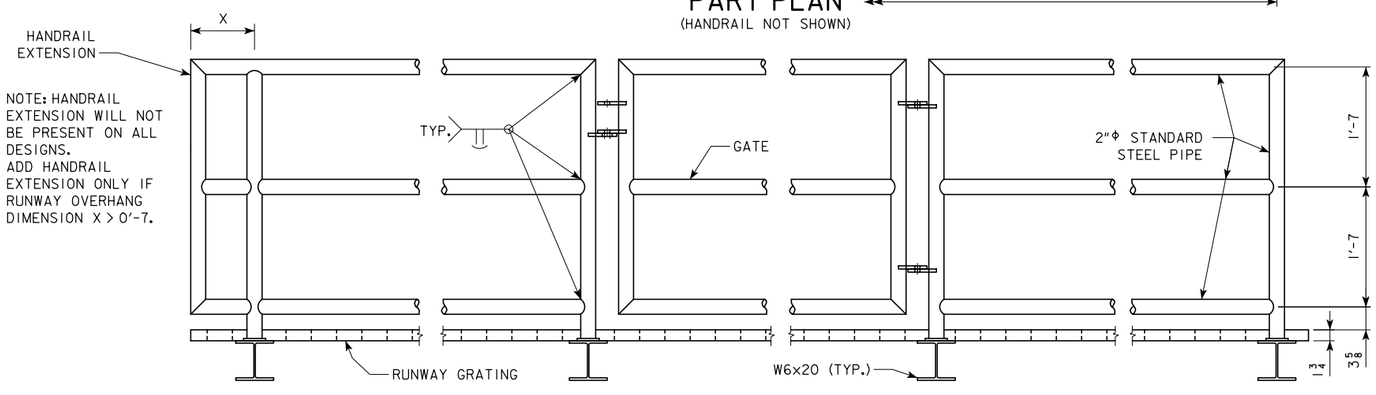

NOTE: HANDRAIL EXTENSION WILL NOT BE PRESENT ON ALL DESIGNS. ADD HANDRAIL EXTENSION ONLY IF RUNWAY OVERHANG DIMENSION X > 0'-7.

VIEW K-K

SHOWING HANDRAIL AND GATE DETAILS
(GATE IS LOCATED ONLY ON SIDE FARTHEST FROM TRUSS)

09-14
LATEST REVISION DATE

APPROVED BY BRIDGE ENGINEER

IOWA DOT Highway Division

STANDARD DESIGN

STEEL OVERHEAD SIGN TRUSS

SEPTEMBER, 2011

DMS RUNWAY DETAILS

50'-130' SPANS

SOST-12-11

REVISION: 09-14 - CHANGED TYPE AND GAGE OF HOLES IN W6X20 FOR CLIP-ANGLE BOLTS.
STEELOVERHEADSIGNTRUSS.DGN - SOST-12-11 - THIS SHEET ISSUED 03-13.

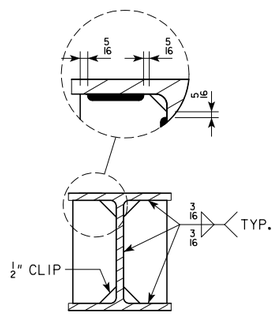

TYPICAL STIFFENER DETAIL

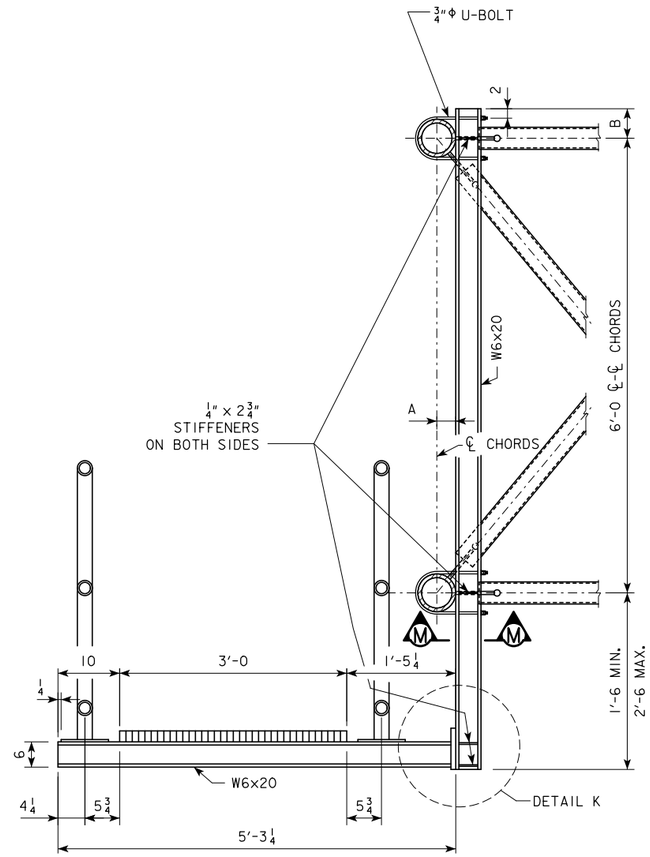

SECTION L-L
TYPICAL RUNWAY SECTION

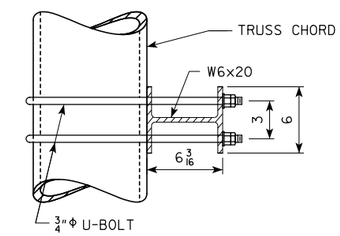

SECTION M-M

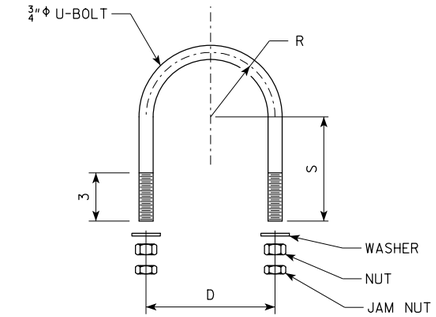

U-BOLT DETAIL

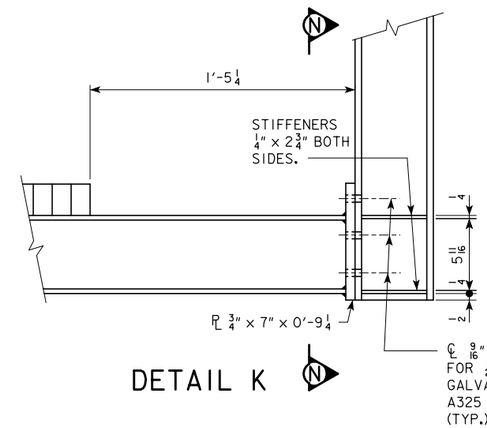

DETAIL K

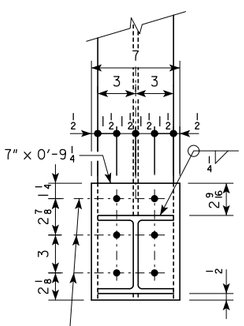

SECTION N-N

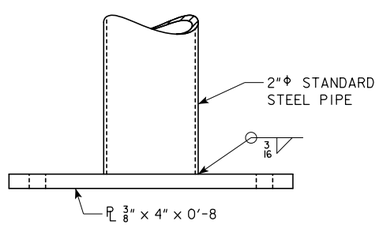

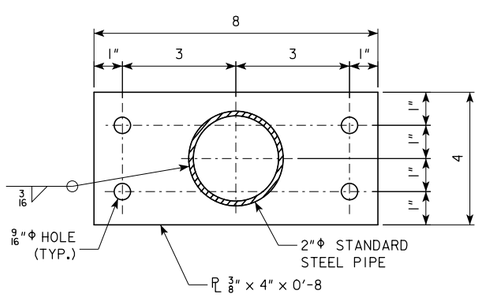

HANDRAIL POST BASE PLATE

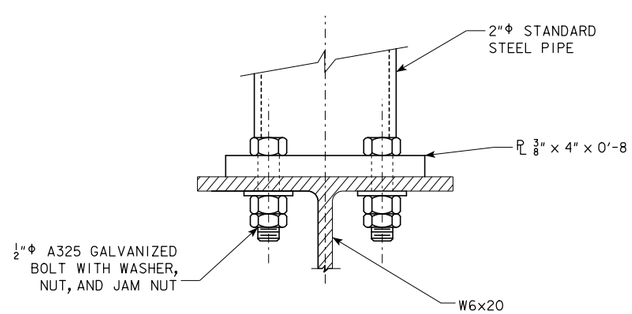

END ELEVATION OF
HANDRAIL POST BASE

DIMENSION TABLE

SPAN	TRUSS CHORD	A	B	U-BOLT DIMENSIONS		
				D	R	S
50' - 100'	5"Φ EXTRA-STRONG STEEL PIPE	2 25/32	5 7/32	6 7/16	3 7/32	11 1/2
105' - 130'	6"Φ EXTRA-STRONG STEEL PIPE	3 5/16	5 3/4	7 1/2	3 3/4	12

NOTE: SEE STANDARD SHEET SOST-12-11 FOR LOCATION OF SECTION L-L.

09-14
LATEST REVISION DATE

APPROVED BY BRIDGE ENGINEER

IOWA DOT Highway Division

STANDARD DESIGN

STEEL OVERHEAD SIGN TRUSS

SEPTEMBER, 2011

DMS RUNWAY DETAILS

50'-130' SPANS

SOST-13-11

REVISION: 09-14 - CHANGED RUNWAY SUPPORT BRACKET DIMENSIONS. CHANGED U-BOLT BEND DIAMETER.
STEELOVERHEADSIGNTRUSS.DGN - SOST-13-11 - THIS SHEET ISSUED 03-13.

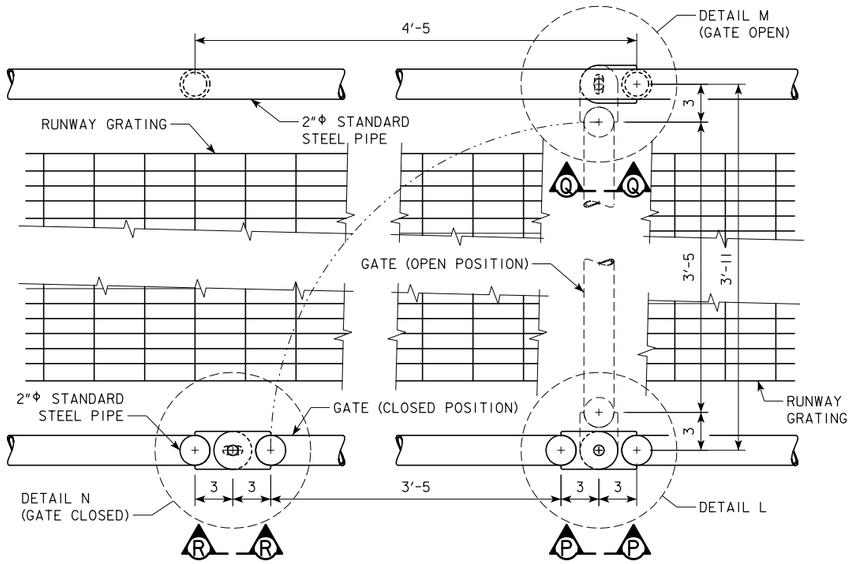

GATE DETAIL PLAN

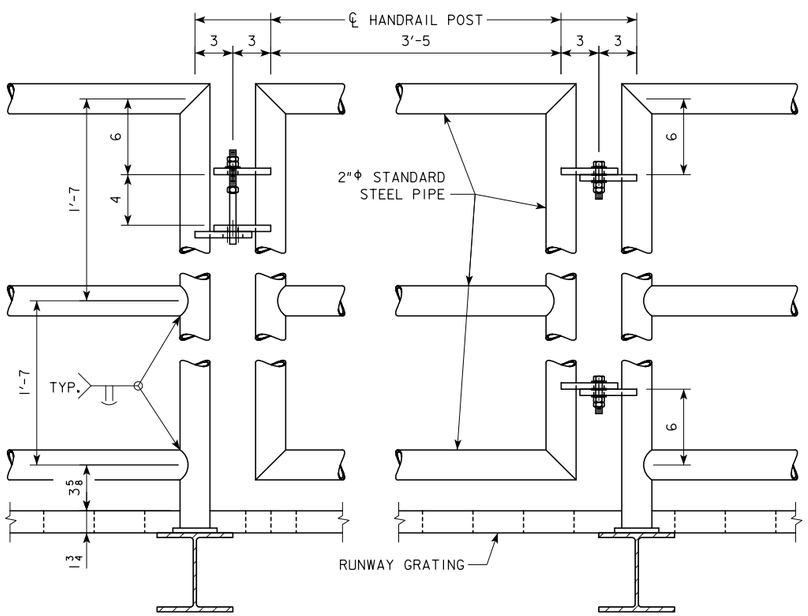

GATE DETAIL ELEVATION

GATE LOCATED OVER
SHOULDER OF ROADWAY

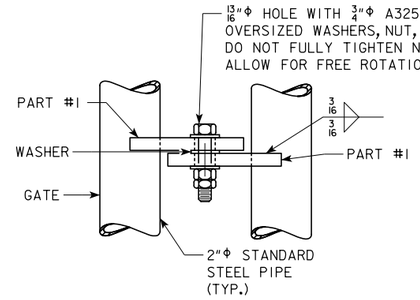

VIEW P-P

GATE HINGE

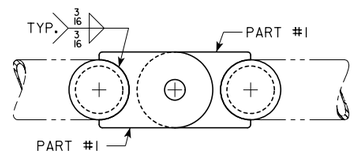

DETAIL L

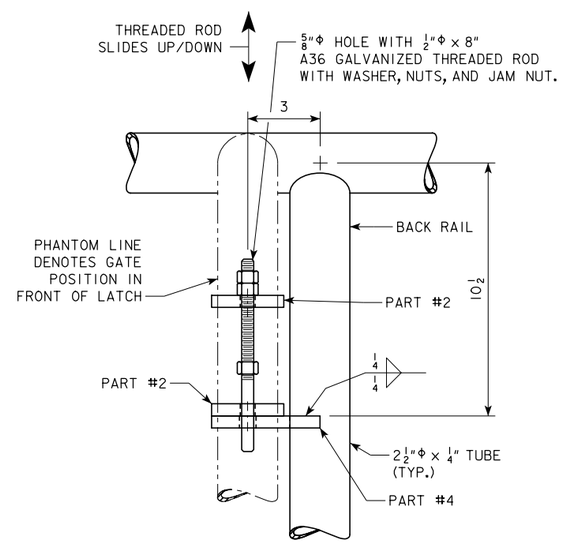

VIEW Q-Q

GATE LATCH WITH GATE OPEN

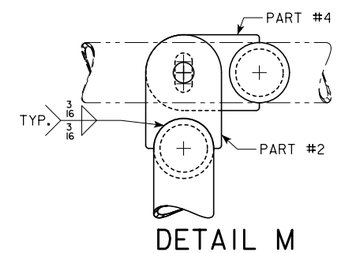

DETAIL M

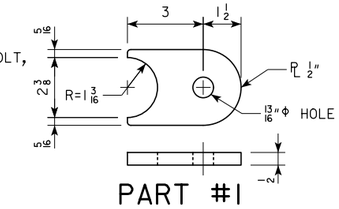

PART #1

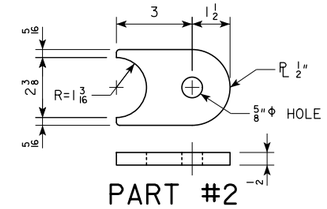

PART #2

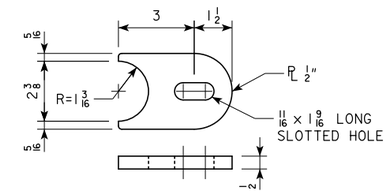

PART #3

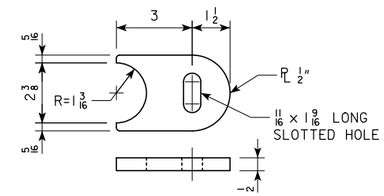

PART #4

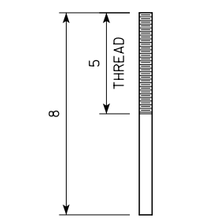

1/2"Φ A36 ROD

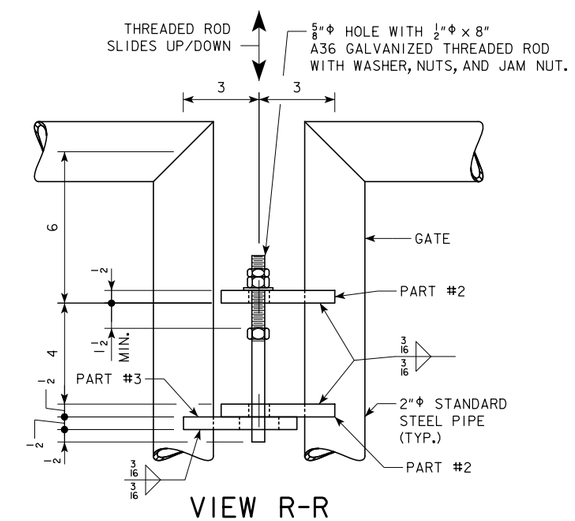

VIEW R-R

GATE LATCH WITH GATE CLOSED

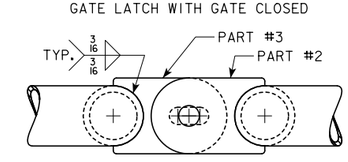

DETAIL N

06-13 LATEST REVISION DATE	APPROVED BY BRIDGE ENGINEER	Iowa Department of Transportation *Highway Division*
		STANDARD DESIGN
		STEEL OVERHEAD SIGN TRUSS
		SEPTEMBER, 2011
		DMS RUNWAY GATE DETAILS — 50'-130' SPANS
		SOST-14-11

REVISION: 06-13 - CHANGED GATE LATCH DETAIL, CHANGED LABELS FOR VIEWS AND DETAILS.
STEELOVERHEADSIGNTRUSS.DGN - SOST-14-11 - THIS SHEET ISSUED 03-13.

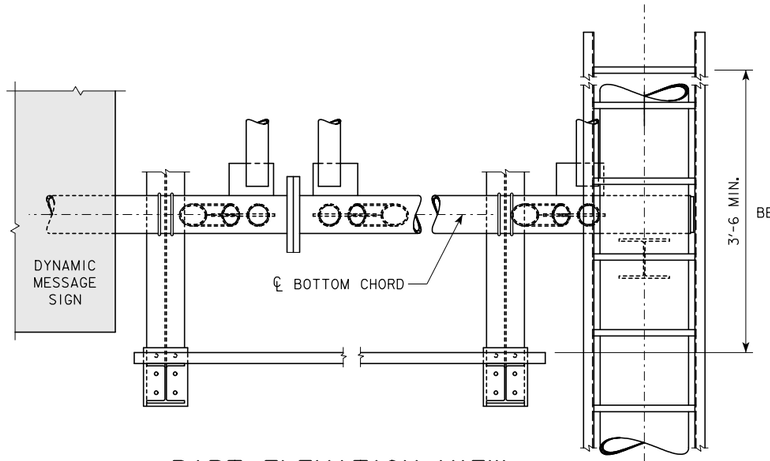

PART ELEVATION VIEW
HANDRAIL NOT SHOWN

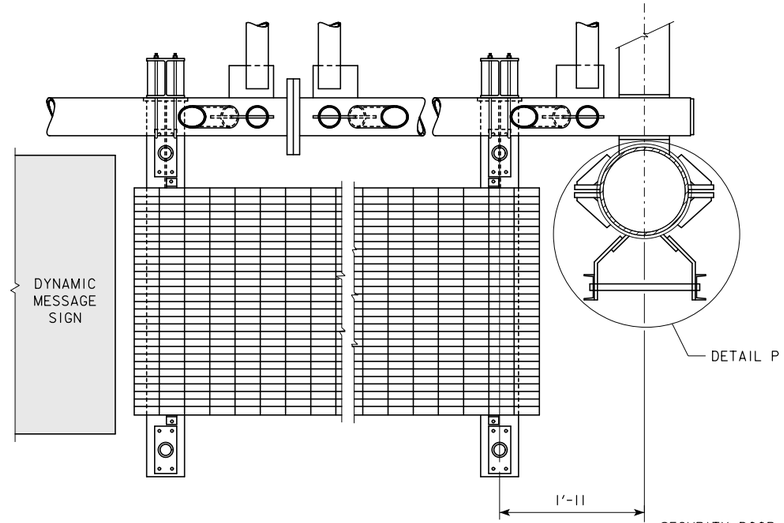

PART PLAN VIEW
HANDRAIL NOT SHOWN

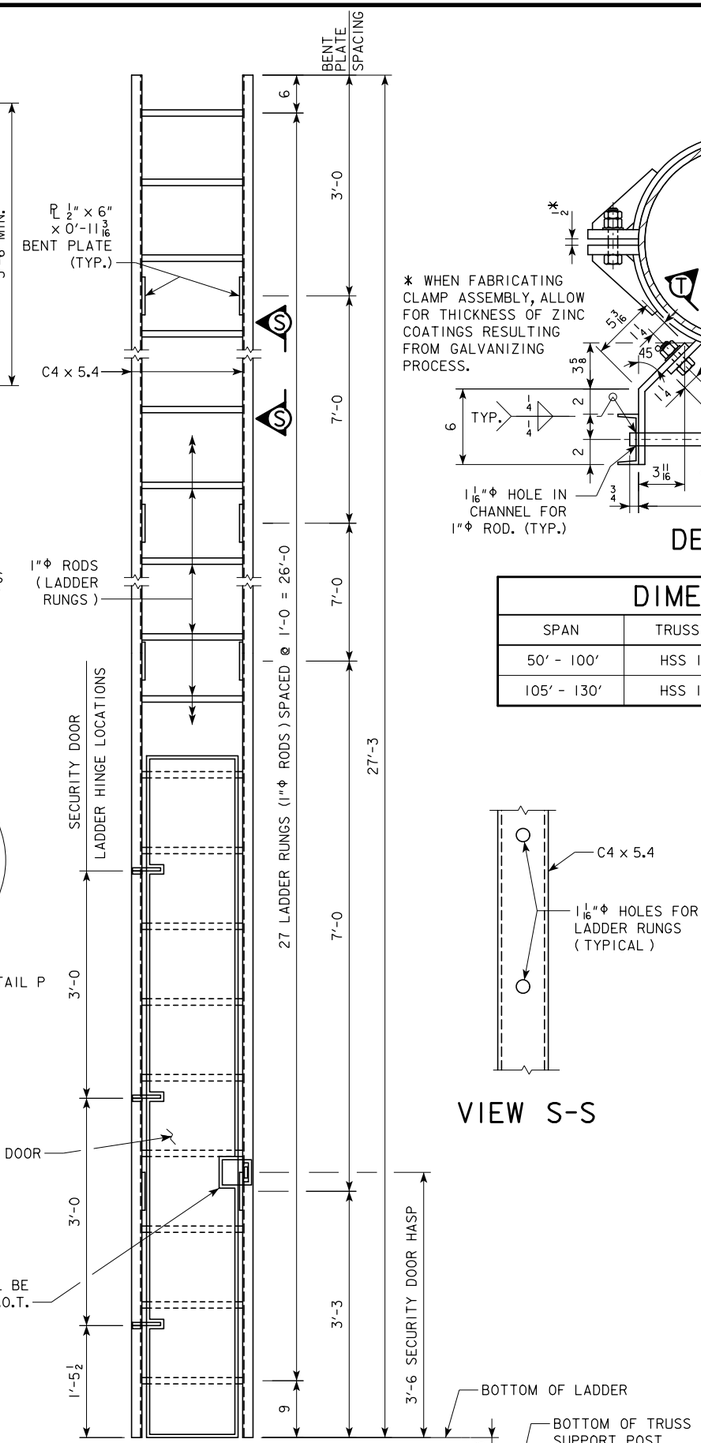

LADDER ELEVATION VIEW
CLAMP ASSEMBLY NOT SHOWN

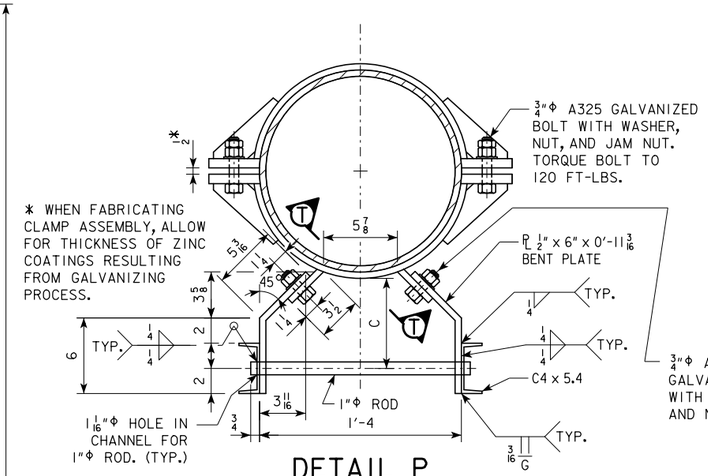

DETAIL P

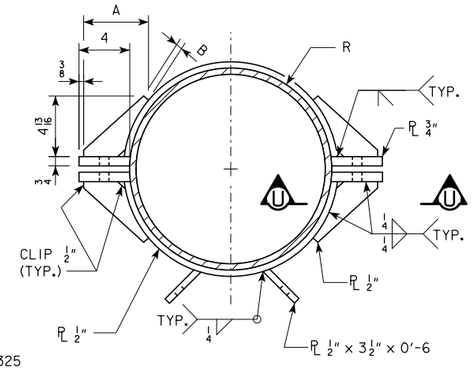

CLAMP ASSEMBLY
4 REQUIRED PER LADDER

DIMENSION TABLE					
SPAN	TRUSS SUPPORT POST	R	A	B	C
50' - 100'	HSS 14.000 x 0.500	7	5 5/16	3/4	7 1/16
105' - 130'	HSS 16.000 x 0.500	8	5 1/8	1/2	7 1/8

VIEW S-S

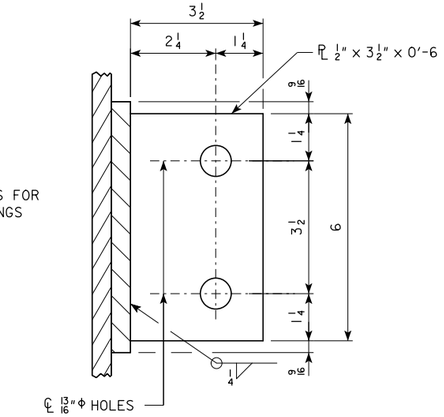

SECTION T-T

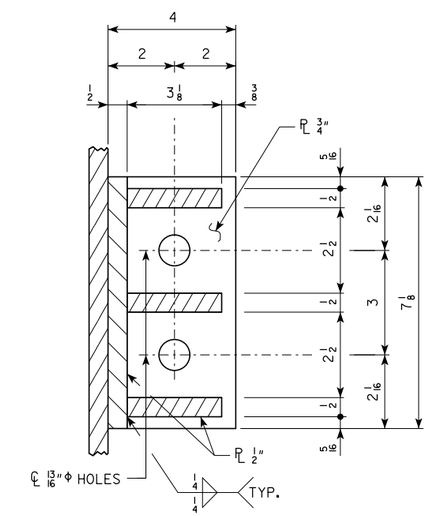

SECTION U-U

NOTE: SEE STANDARD SHEET SOST-16-11 FOR SECURITY DOOR DETAILS.

06-13
LATEST REVISION DATE

APPROVED BY BRIDGE ENGINEER

Iowa Department of Transportation
Highway Division

STANDARD DESIGN

STEEL OVERHEAD SIGN TRUSS

SEPTEMBER, 2011

DMS LADDER DETAILS

50'-130' SPANS

SOST-15-11

REVISION: 06-13 - CHANGED LABEL FOR DETAIL.
STEELOVERHEADSIGNTRUSS.DGN - SOST-15-11 - THIS SHEET ISSUED 03-13.

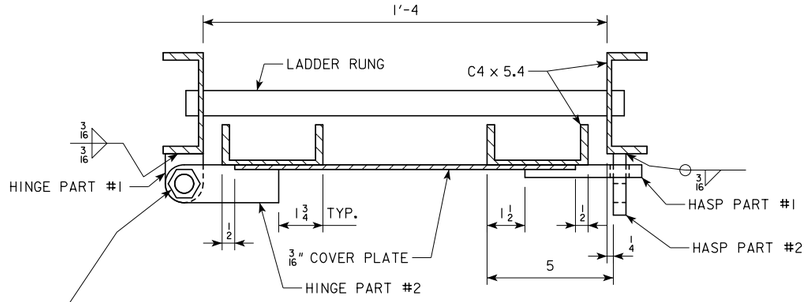

SECTION V-V

3/4"Φ HOLE WITH 5/8"Φ A325 GALVANIZED BOLT WITH WASHER, NUT, AND JAM NUT. DO NOT FULLY TIGHTEN NUT TO HINGE PLATE TO ALLOW FOR FREE ROTATION OF THE HINGE.

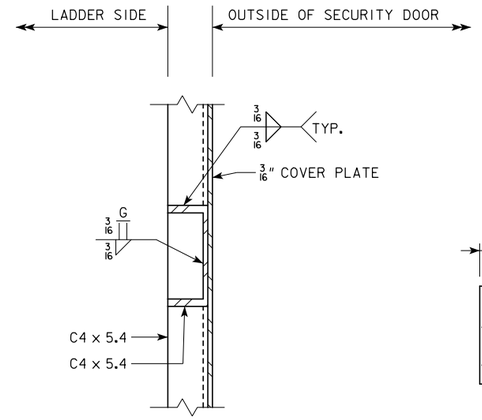

SECTION W-W

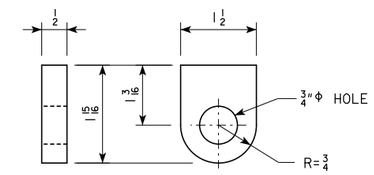

HINGE PART #1

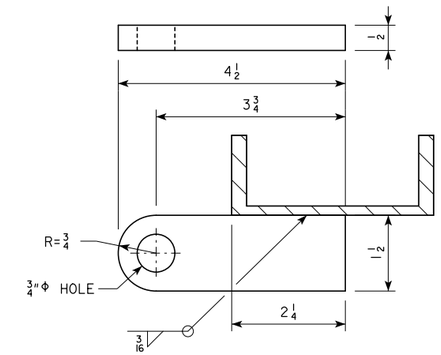

HINGE PART #2

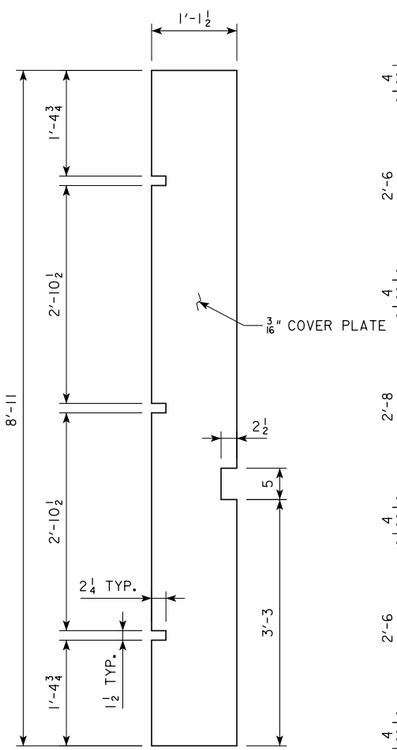

3/16" COVER PL DETAIL

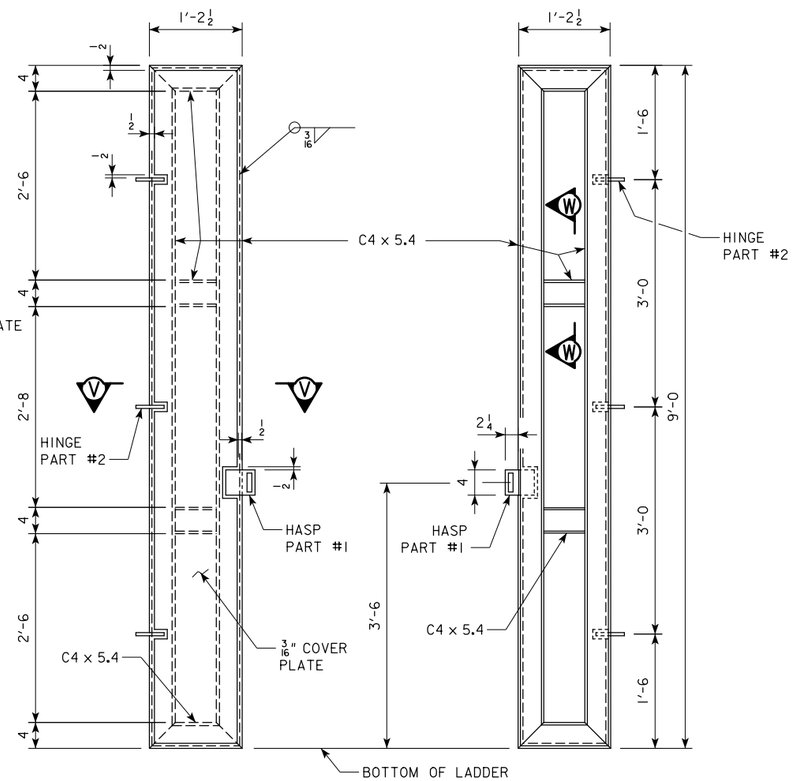

SECURITY DOOR ELEV.
FRONT SIDE OF DOOR

SECURITY DOOR ELEV.
BACK (LADDER) SIDE OF DOOR

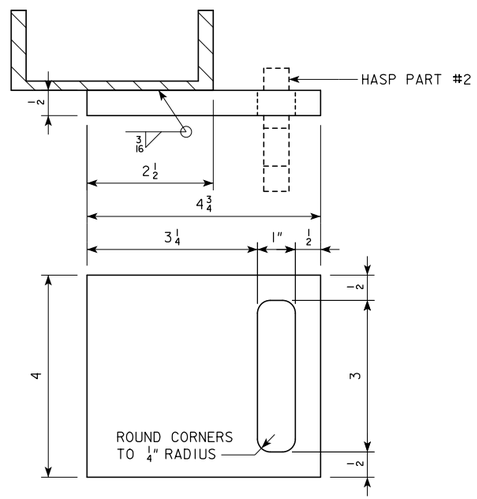

HASP PART #1

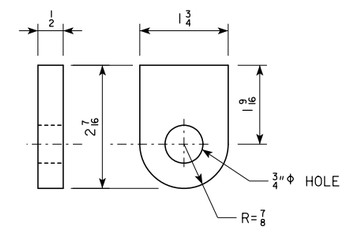

HASP PART #2

11-13 LATEST REVISION DATE	APPROVED BY BRIDGE ENGINEER	Iowa Department of Transportation *Highway Division*
		STANDARD DESIGN
		STEEL OVERHEAD SIGN TRUSS
		SEPTEMBER, 2011
		DMS LADDER SECURITY DOOR DETAILS 50'-130' SPANS
		SOST-16-11

REVISION: 11-13 - CORRECTED HASP EXTENSION DIMENSION ON SECURITY DOOR ELEVATION.
STEELOVERHEADSIGNTRUSS.DGN - SOST-16-11 - THIS SHEET ISSUED 03-13.

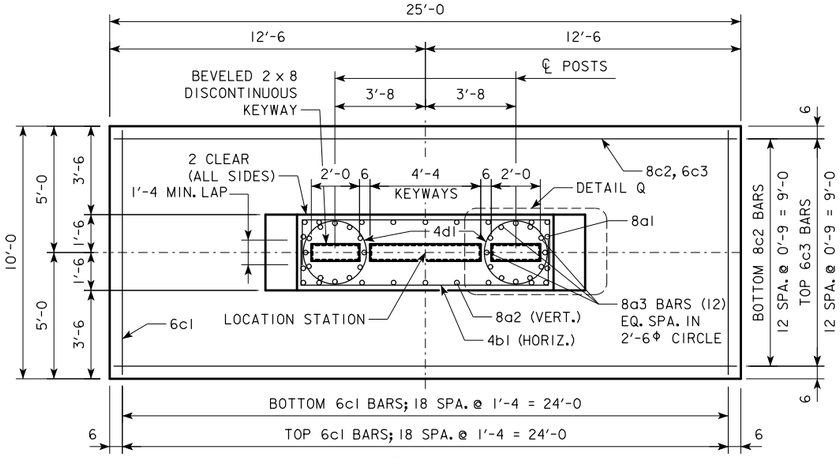

PLAN

ANCHOR BOLT ASSEMBLIES NOT SHOWN

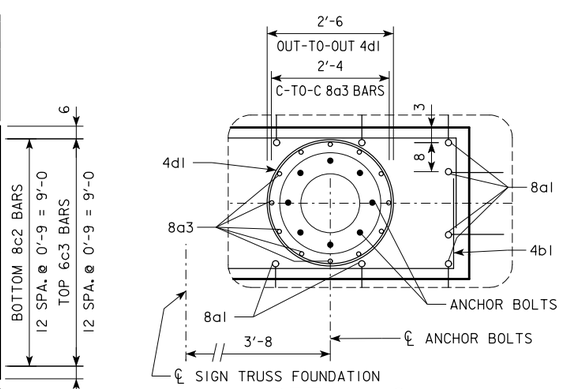

DETAIL Q

ANCHOR BOLT AND ANCHOR REINFORCING PLACEMENT

KEYWAY NOT SHOWN

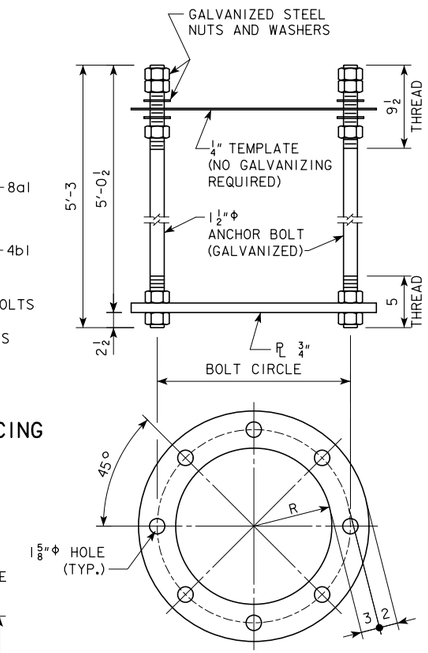

ANCHOR BOLT ASSEMBLY

GENERAL NOTES:

STRUCTURAL CONCRETE, CLASS C, SHALL BE USED FOR THE FOUNDATION.

EXCAVATION FOR THE FOUNDATION SHALL BE TO NEAT LINES AND CONCRETE SHALL BE PLACED AGAINST THE UNDISTURBED MATERIAL. ALL EXCAVATION FOR THE FOUNDATION SHALL BE DISPOSED IN THE AREA ADJACENT TO THE FOUNDATION AND SHAPED TO NORMAL GROUND CONTOUR, UNLESS OTHERWISE DIRECTED BY THE ENGINEER. MAXIMUM DESIGN BEARING CAPACITY IS 1.0 TON PER SQUARE FOOT. (FOUNDATION DESIGN IS BASED ON A MAXIMUM SOIL SURCHARGE DEPTH OF 6'-0.)

TWO ANCHOR BOLT ASSEMBLIES INCLUDING ANCHOR PLATES, TEMPLATES, NUTS (5 PER BOLT) AND WASHERS (2 PER BOLT) ARE REQUIRED PER FOUNDATION.

ALL ANCHOR BOLT MATERIALS AND GALVANIZING SHALL BE IN ACCORDANCE WITH THE REQUIREMENTS OF IOWA DOT MATERIALS I.M. 453.08.

PRICE BID FOR CONTRACT ITEMS SHALL INCLUDE ALL LABOR AND MATERIALS NECESSARY TO CONSTRUCT OVERHEAD SIGN TRUSS FOUNDATION AS DETAILED HEREON. THE COST OF FURNISHING AND INSTALLING ANCHOR BOLT ASSEMBLIES, CONDUIT, AND RODENT GUARDS ARE TO BE INCLUDED IN THE UNIT PRICE BID FOR STRUCTURAL CONCRETE. CONTRACT ITEMS FOR OVERHEAD SIGN TRUSS FOUNDATION CONSTRUCTION ARE:

- REINFORCING STEEL, EPOXY COATED - POUNDS
- STRUCTURAL CONCRETE (MISCELLANEOUS) - CUBIC YARDS
- EXCAVATION - CUBIC YARDS OF CLASS SPECIFIED

CONCRETE PLACEMENT QUANTITIES

ONE FOUNDATION

ITEM	L = 0	EACH 1'-0 OF L
WALL	5.71	1.41
FOOTING	18.52	---
TOTAL (C.Y.)	24.23	1.41

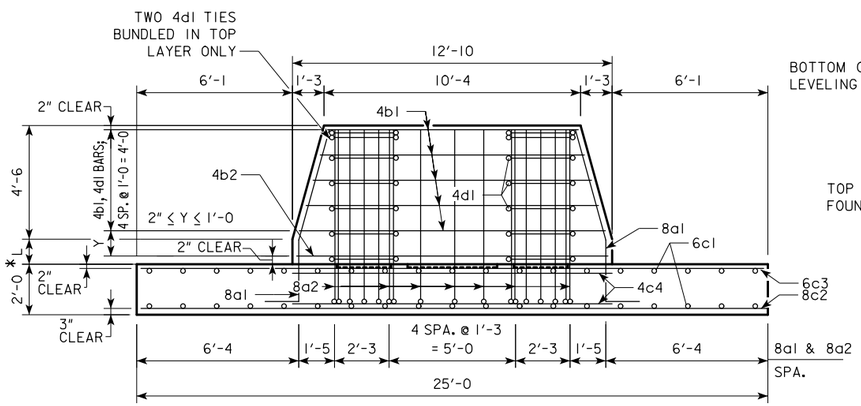

SIDE ELEVATION

ANCHOR BOLT ASSEMBLIES NOT SHOWN

* L SHALL NOT EXCEED 6'-0

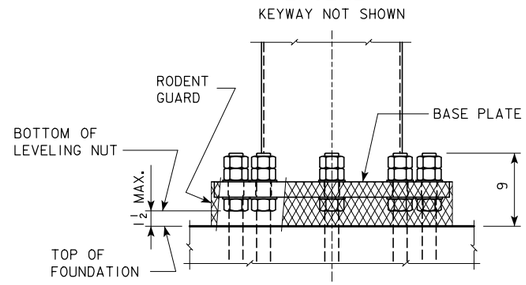

POST BASE DETAIL

SHOWING THE RODENT GUARD

THE RODENT GUARD SHALL BE PLACED AROUND THE BASE PLATE.

THE RODENT GUARD IS STAINLESS STEEL STANDARD GRADE WIRE CLOTH, 1/4" MAXIMUM OPENING WITH A MINIMUM WIRE DIAMETER OF AWG NO. 16 WITH A MINIMUM 2" LAP.

SECURE WIRE CLOTH TO BASE PLATE AFTER ERECTION WITH 3/4" STAINLESS STEEL BANDING. THE RODENT GUARD SHALL NOT EXTEND ABOVE THE TOP OF THE BASE PLATE.

	R	BOLT CIRCLE DIAMETER
FOR 14"Φ POSTS (50'-100' SPANS)	7	1'-8
FOR 16"Φ POSTS (105'-130' SPANS)	8	1'-10

TOP-OF-WALL ELEVATION IS TO BE SET AT SAME ELEVATION AS HIGH POINT ON ROADWAY OR AS DIRECTED BY THE ENGINEER.

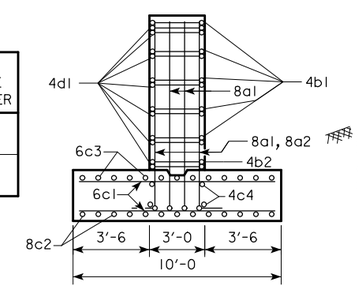

END ELEVATION

REINFORCING - 8a3 NOT SHOWN

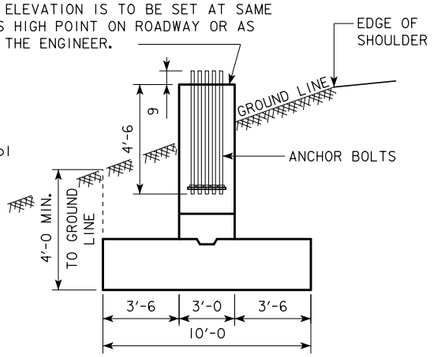

END ELEVATION

ANCHOR BOLTS

FOR DMS TRUSSES ONLY

ELECTRICAL CONDUIT IS REQUIRED IN FOUNDATIONS SUPPORTING TRUSSES WITH DYNAMIC MESSAGE SIGNS. SEE STANDARD SHEET SOST-18-11 FOR CONDUIT LOCATION DETAILS.

BENT BAR DETAILS (SHOP BEND ALL BARS)

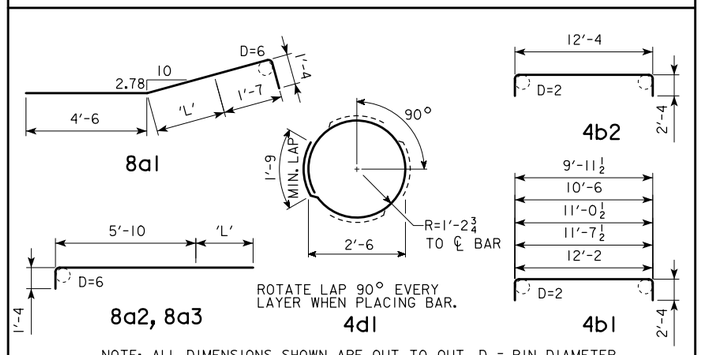

NOTE: ALL DIMENSIONS SHOWN ARE OUT TO OUT. D = PIN DIAMETER.

(A) ADDITIONAL LENGTH TO BARS 8a1, 8a2, AND 8a3 FOR L > 0

(B) TWO IN EACH 1'-0 OF L

(C) MAINTAIN UNIFORM 1'-0 SPACING FOR ALL VALUES OF L, WITH REMAINDER SPACING AT BOTTOM OF STEM WALL 2" ≤ Y ≤ 1'-0.

** BUNDLE TWO 4d1 CIRCULAR TIES IN TOP LAYER.

REINFORCING BAR LIST - EPOXY COATED

ONE FOUNDATION

SIZE	SHAPE	TABULATED VALUE FOR L = 0				EACH 1'-0 OF L		
		NO.	LENGTH	WEIGHT	SPACING	NO.	LENGTH	WEIGHT
8a1		8	7'-5	158	SEE DETAIL	8	1'-0 (A)	21
8a2		14	7'-2	268	SEE DETAIL	14	1'-0 (A)	37
8a3		24	7'-2	459	SEE DETAIL	24	1'-0 (A)	64
4b1		10	Varies	105	1'-0 (C)	---	---	---
4b2		---	---	---	---	2 (B)	17'-0	23
6c1		38	9'-6	542	1'-4	---	---	---
8c2		13	24'-6	850	0'-9	---	---	---
6c3		13	24'-6	478	0'-9	---	---	---
4c4		4	12'-8	34	SEE DETAIL	---	---	---
4d1		12**	9'-6	76	1'-0 (C)	2 (B)	9'-6	13
		TOTAL 2970 LBS.				TOTAL 158 LBS.		

09-14
LATEST REVISION DATE

APPROVED BY BRIDGE ENGINEER

IOWA DOT Highway Division

STANDARD DESIGN

STEEL OVERHEAD SIGN TRUSS

SEPTEMBER, 2011

NON-STAGED FOUNDATION DETAILS

50'-130' SPANS

SOST-17-11

REVISION: 09-14 - MODIFIED NOTES.
STEELOVERHEADSIGNTRUSS.DGN - SOST-17-11 - THIS SHEET ISSUED 09-11.

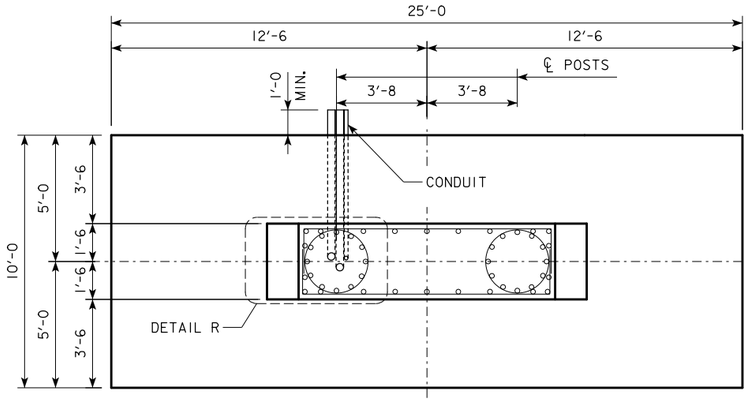

FOUNDATION PLAN FOR LEFT TRUSS SUPPORT

LOCATED AT MEDIAN FOR TYPICAL DESIGNS
ANCHOR BOLT ASSEMBLIES AND SELECTED REINFORCING BARS NOT SHOWN

TRAFFIC FLOW

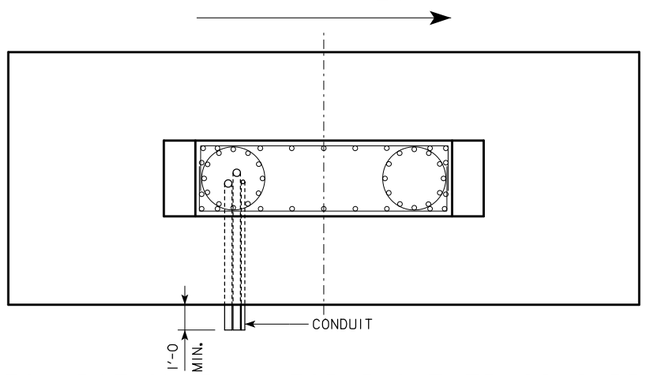

FOUNDATION PLAN FOR RIGHT TRUSS SUPPORT

LOCATED AT OUTSIDE SHOULDER FOR TYPICAL DESIGNS
ANCHOR BOLT ASSEMBLIES AND SELECTED REINFORCING BARS NOT SHOWN

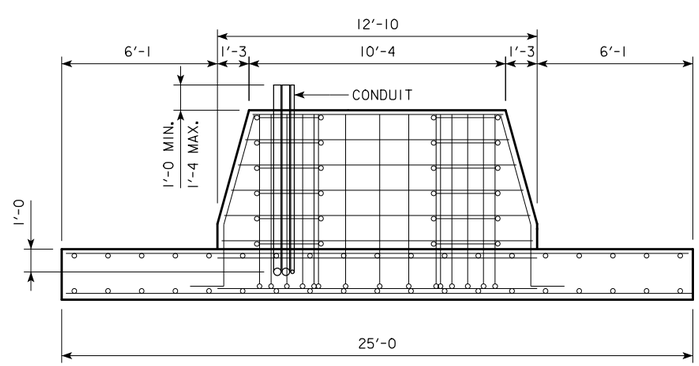

SIDE ELEVATION

ANCHOR BOLT ASSEMBLIES NOT SHOWN

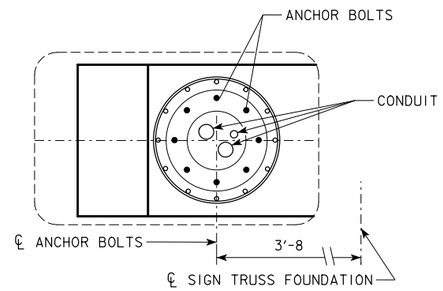

DETAIL R

LOCATION OF CONDUIT WITHIN ANCHOR BOLT CIRCLE

STEM WALL PERIMETER REINFORCING BARS NOT SHOWN

THIS SHEET FOR DMS TRUSSES ONLY

ELECTRICAL CONDUIT IS REQUIRED IN FOUNDATIONS SUPPORTING TRUSSES WITH DYNAMIC MESSAGE SIGNS.

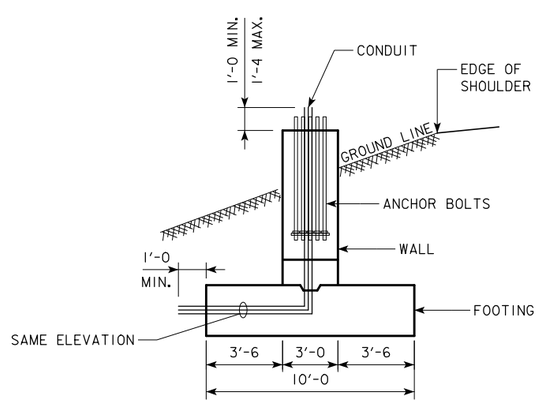

END ELEVATION

REINFORCING BARS NOT SHOWN

GENERAL NOTES:

FOR FOUNDATIONS SUPPORTING TRUSSES WITH DYNAMIC MESSAGE SIGNS, PLACE ONE 1"Φ CONDUIT AND TWO 2"Φ CONDUIT WITHIN THE ANCHOR BOLT CIRCLE CLOSEST TO THE DIRECTION OF THE APPROACHING TRAFFIC. EXTEND CONDUIT ENDS A MINIMUM OF 1'-0 ABOVE FOUNDATION WALL AND 1'-0 PAST EDGE OF FOUNDATION FOOTING ON SIDE AWAY FROM ROADWAY. CONDUIT SHALL BE PLACED IN BOTH FOUNDATIONS UNLESS OTHERWISE INDICATED ON DETAIL PROJECT PLANS. ALL CONDUIT SHALL BE SCHEDULE 40 PLASTIC.

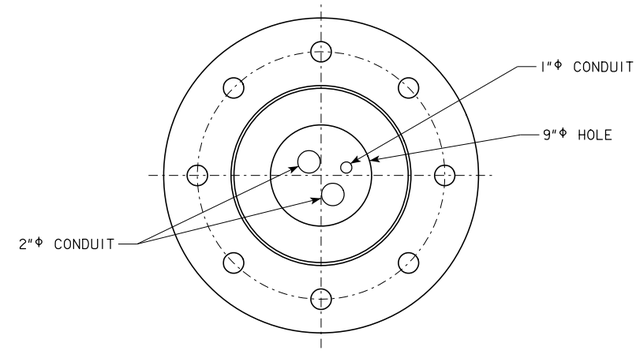

BASE PLATE PLAN

CONDUIT IS PRESENT ONLY
IN POSTS WITH HAND HOLES

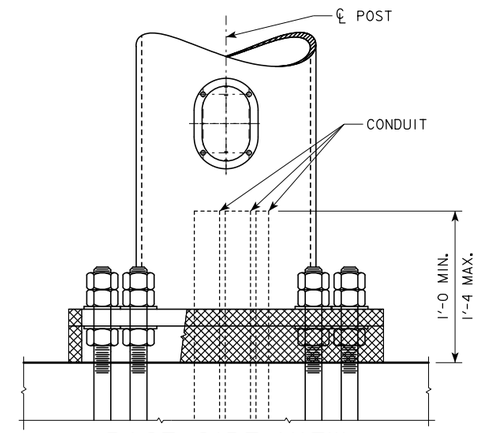

BASE SIDE VIEW

OPPOSITE OF TRAFFIC SIDE
NOT ALL ANCHOR BOLTS SHOWN

NOTE: SEE THE FOLLOWING STANDARD SHEETS FOR ELECTRICAL ACCESS DETAILS IN SUPPORT POSTS FOR DMS TRUSS DESIGNS:
STANDARD SHEET SOST-06-11 FOR 14"Φ POSTS (50'-100' TRUSS SPANS)
STANDARD SHEET SOST-07-11 FOR 16"Φ POSTS (105'-130' TRUSS SPANS)

06-13
LATEST REVISION DATE

APPROVED BY BRIDGE ENGINEER

Iowa Department of Transportation
Highway Division

STANDARD DESIGN

STEEL OVERHEAD SIGN TRUSS

SEPTEMBER, 2011

CONDUIT LOCATION DETAILS

50'-130' SPANS

SOST-18-11

REVISION: 06-13 - CHANGED LABEL FOR DETAIL.
STEELOVERHEADSIGNTRUSS.DGN - SOST-18-11 - THIS SHEET ISSUED 03-13.