PHASE I - COMPLETED BY OCTOBER 30, 2015:

1. INCLUDES ALL SOIL REMEDIATION FOR BRINE BUILDING, NEW HOOP BUILDING, EXCAVATION OF DRAINAGE SWALE.
2. INSTALLATION OF STORM SEWER PIPING BETWEEN SWALES; ALL UTILITIES AND LIGHTING TO EAST FOR BRINE BUILDING.
3. CONSTRUCTION OF BRINE BUILDING INCLUDING ALL MEP, PAVING, LIGHTING.
4. THE NEW HOOP BUILDING WILL BE PROVIDED AND ERECTED BY OTHERS. THE GENERAL CONTRACTOR IS RESPONSIBLE FOR COORDINATING THE ASPHALT PAVING (SEE DETAIL 14/A-11) INSIDE THE BUILDING AND 30'X80 CONCRETE PAVING TO THE BUILDING. GENERAL CONTRACTOR IS NOT RESPONSIBLE FOR ANY DELAYS BECAUSE HOOP BUILDING INSTALLER DID NOT COMPLETE WORK IN TIME FOR ASPHALT AND CONCRETE PAVING FOR BUILDING BY SEPTEMBER 1, 2015.
5. PHASE I WILL BE CONSIDERED COMPLETE WHEN THE IDOT REPRESENTATIVE, BUILDING CODE BUREAU, AND OTHER STATE AGENCIES HAVE INSPECTED; AND A CERTIFICATE OF SUBSTANTIAL COMPLETION HAS BEEN ISSUED.

PHASE II - COMPLETED BY OCTOBER 30, 2015:

1. INCLUDES ALL UTILITIES AND TEMPORARY UTILITIES TO NEW POLE BUILDING
2. CONSTRUCTION OF POLE BUILDING INCLUDING ALL LIGHTING FOR BUILDING; CONCRETE SIDEWALKS AND CONCRETE PAVING.
3. PHASE II WILL BE CONSIDERED COMPLETE WHEN THE IDOT REPRESENTATIVE, BUILDING CODE BUREAU, AND OTHER STATE AGENCIES HAVE INSPECTED; AND A CERTIFICATE OF SUBSTANTIAL COMPLETION HAS BEEN ISSUED.

PHASE III - COMPLETED BY OCTOBER 30, 2015:

1. INCLUDES ALL SOIL REMEDIATION; GEOPIER INSTALLATION; AND CONCRETE FOOTINGS FOR MAINTENANCE BUILDING. (SEE SP-1, S000, ANDS001)
2. INSTALLATION OF ALL UTILITIES TO WITHIN 5 FEET OF MAINTENANCE BUILDING.
3. PHASE III WILL BE CONSIDERED COMPLETE WHEN THE IDOT REPRESENTATIVE, BUILDING CODE BUREAU, AND OTHER STATE AGENCIES HAVE INSPECTED; AND CERTIFICATE OF SUBSTANTIAL COMPLETION HAS BEEN ISSUED.

ENTIRE PROJECT- COMPLETED BY SEPTEMBER 1, 2016

1. COMPLETION OF ALL WORK NOT INCLUDED IN PHASE I, II, AND III; INCLUDING BUT NOT LIMITED TO THE CONSTRUCTION OF THE MAINTENANCE BUILDING, PAVING, SIDEWALKS, UTILITIES, AND SITEWORK.
2. COMPLETION OF PUNCHLIST ITEMS FOR ENTIRE PROJECT INCLUDING PHASES I, II, AND III.
3. THE ENTIRE PROJECT WILL BE CONSIDERED COMPLETE WHEN THE IDOT REPRESENTATIVE, BUILDING CODE BUREAU, AND OTHER STATE AGENCIES HAVE INSPECTED; AND A CERTIFICATE OF SUBSTANTIAL COMPLETION HAS BEEN ISSUED.

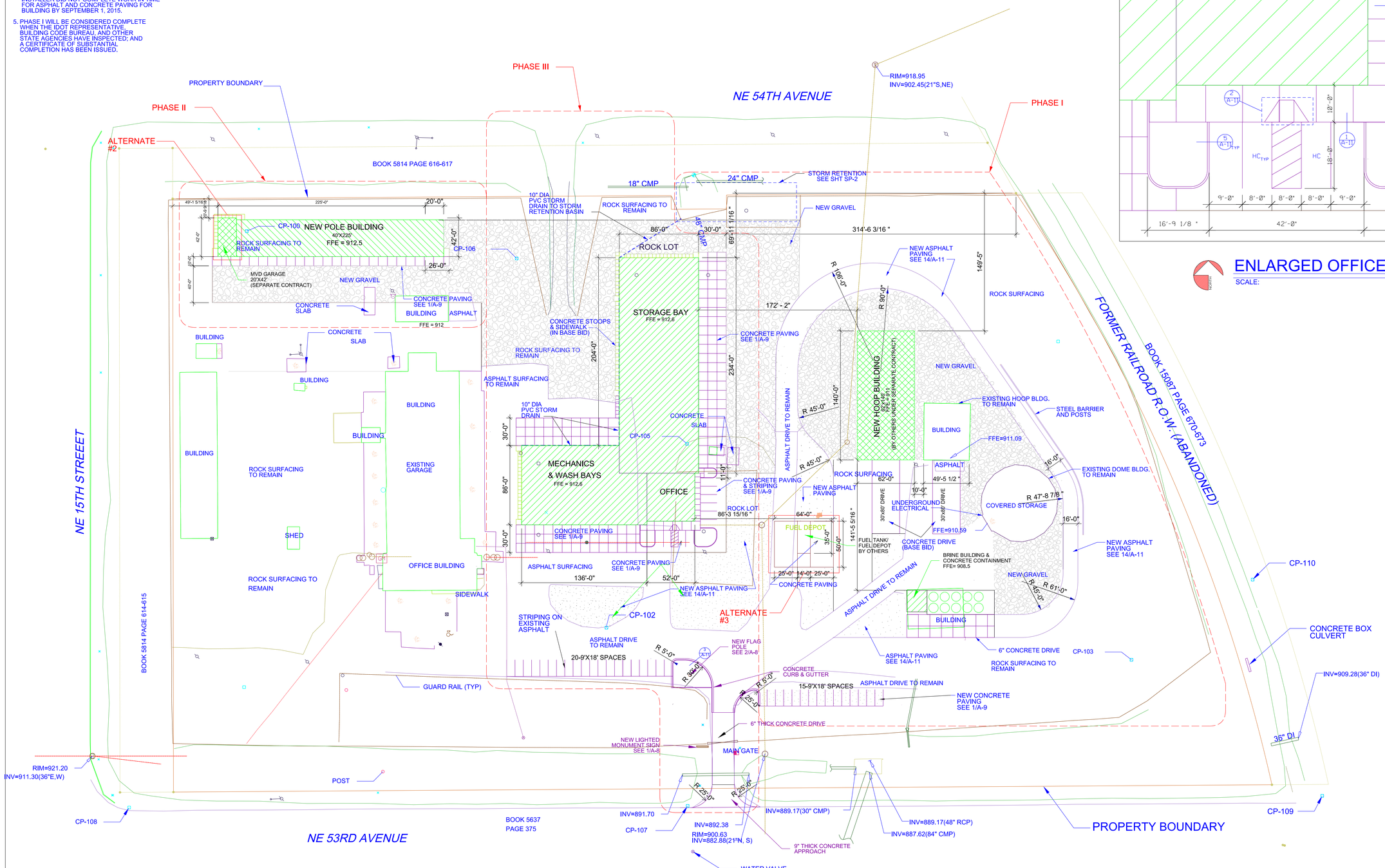

SITE PLAN

SCALE: 1"=50'

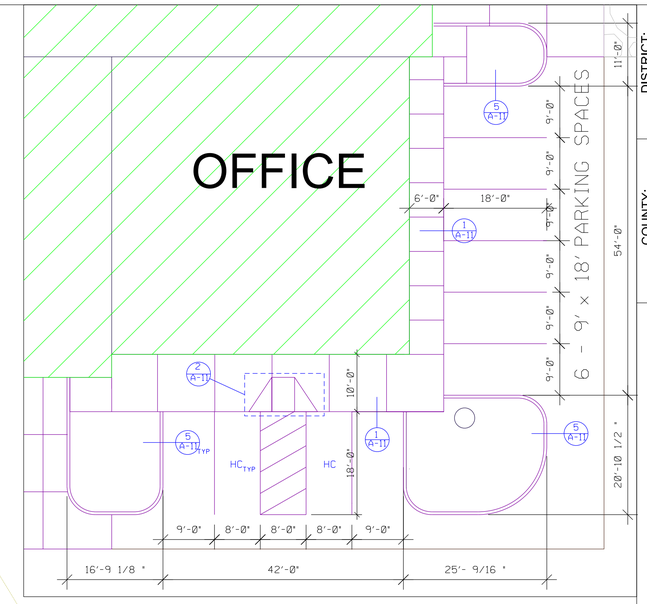

ENLARGED OFFICE PARKING

SCALE: 1"=12.5'

DISTRICT: 01

COUNTY: POLK

PROJECT NUMBER: BG-1D20(000)--80-77

HIGHWAY MAINTENANCE GARAGE

DES MOINES, IOWA

SITE PLAN

IOWADOT
SMARTER I SIMPLER I CUSTOMER DRIVEN
OFFICE OF SUPPORT SERVICES
800 LINCOLN WAY
AMES, IOWA 50010 (515)239-1289

DATE: 21 MAY 2015

DRAWN BY: DESIGN TEAM

APPROVED: J BURNES

REVISIONS: 1 7-15-2015

SHEET OF

SP-4R

NOTES:

1. PROVIDE DOUBLE 'L' STEEL LINTELS AT MASONRY OPENINGS
2. ALL INTERIOR FACES OF PRECAST CONCRETE PANELS TO BE FINISHED SMOOTH
3. PLUMBING WALL CONSISTS OF TWO 4" CONCRETE MASONRY WALLS WITH 4" CAVITY
4. FOR PLACEMENT OF RESTROOM FIXTURES SEE A-9 SHEET
5. FOR DOOR AND ROOM FINISH SCHEDULES SEE SHEET A-12
6. ALL CORNERS AND OPENINGS ON BURNISHED CONCRETE (ALT #4) MASONRY WALLS SHALL BE BULLNOSE
7. FINISH MASONRY EDGE AGAINST COLUMN. CAULK 1/2" JOINT TO MATCH MASONRY

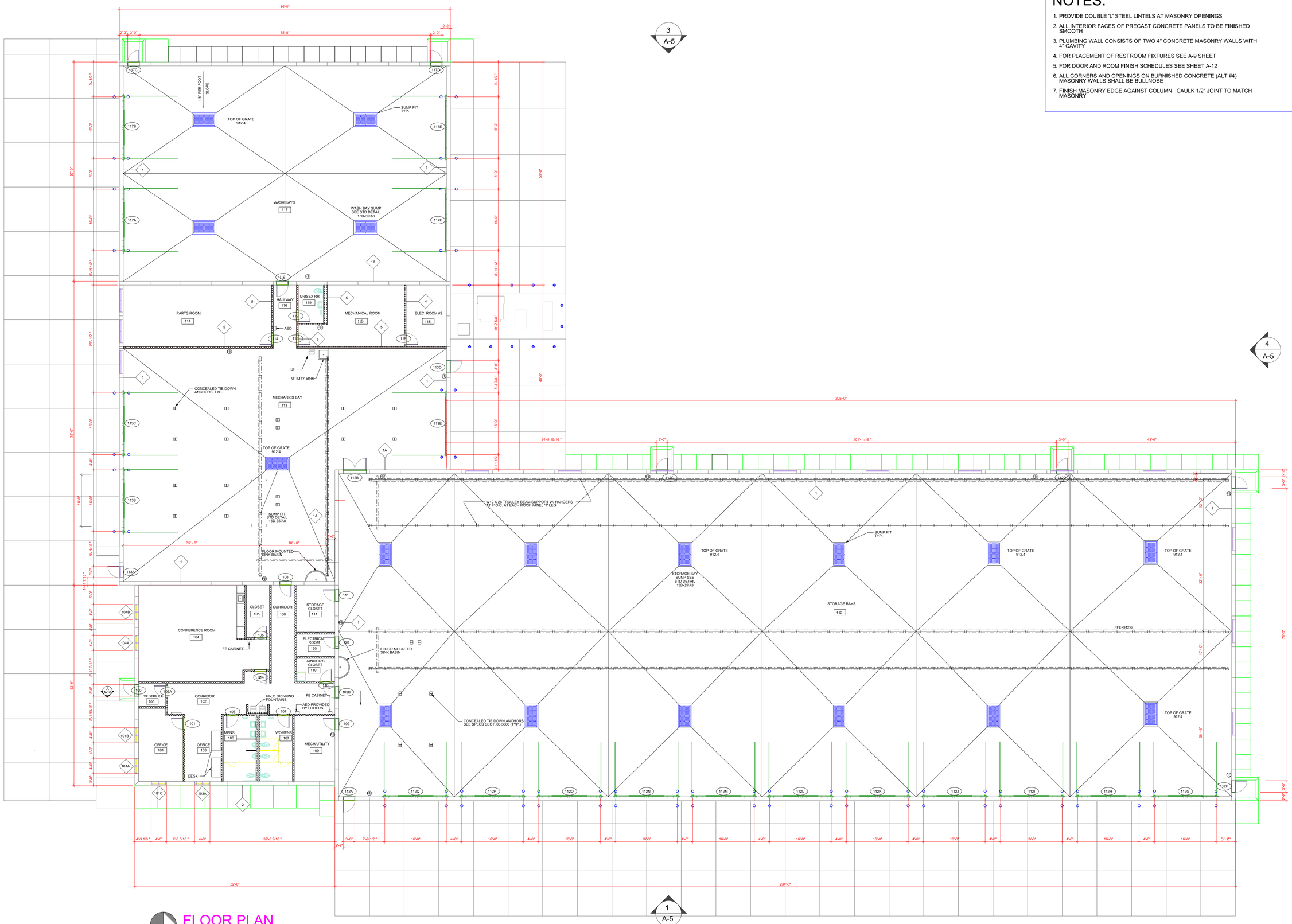

FLOOR PLAN

SCALE: 3/32"=1'-0"

DISTRICT: 01

COUNTY: POLK

PROJECT NUMBER: BG-1D20(000)--80-77

DES MOINES, IOWA

HIGHWAY MAINTENANCE GARAGE

FLOOR PLAN

IOWADOT
SMARTER | SIMPLER | CUSTOMER DRIVEN
OFFICE OF SUPPORT SERVICES
800 LINCOLN WAY
AMES, IOWA 50010 (515)239-1299

DATE: 21AY 2015

DRAWN BY: K KOCH

APPROVED: J BURNES

REVISIONS: 1 7-15-2015

SHEET OF

A-1R

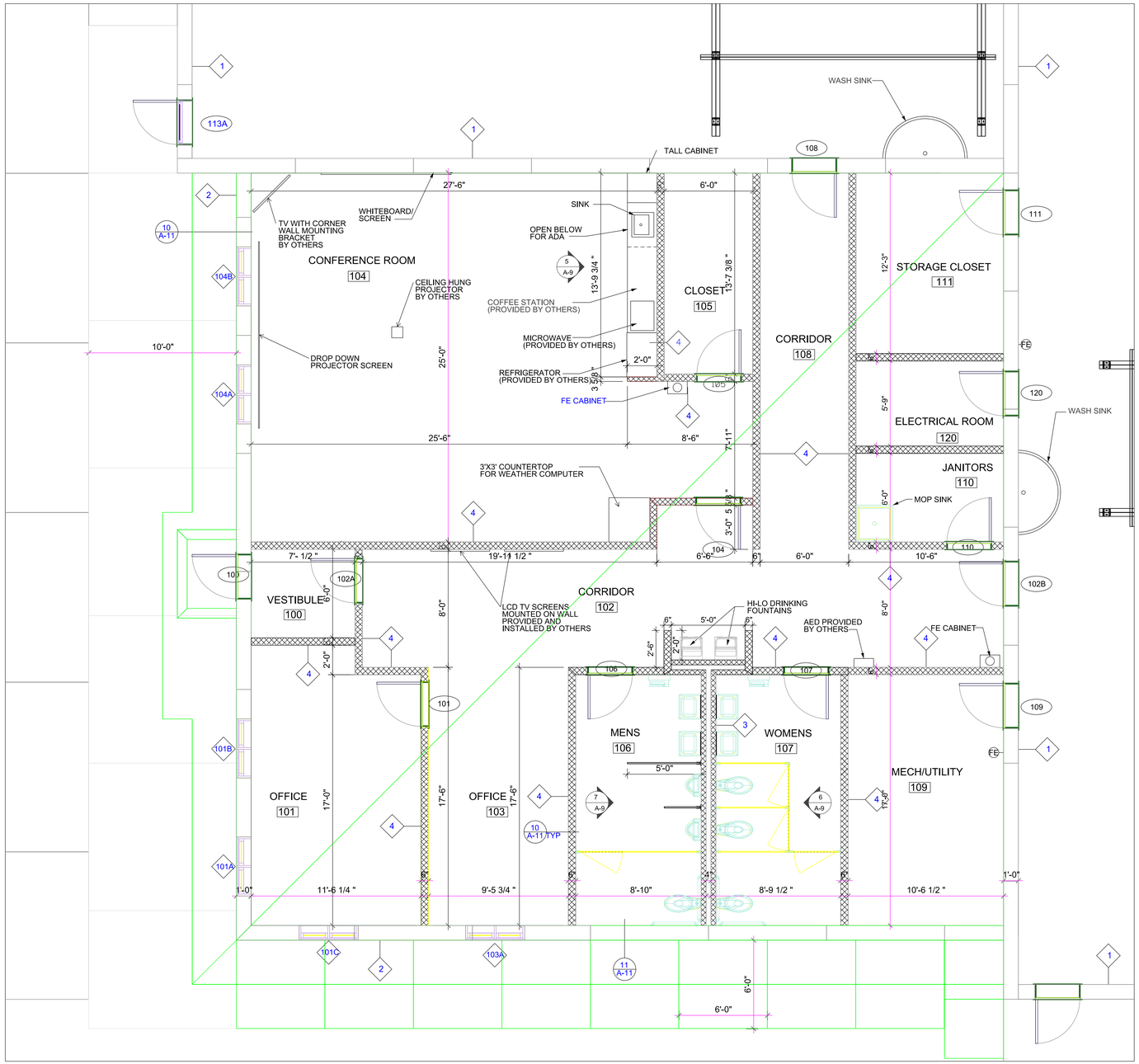

ENLARGED OFFICE PLAN

SCALE: 1/4"=1'-0"

NOTES:

1. PROVIDE DOUBLE 'L' STEEL LINTELS AT MASONRY OPENINGS
2. ALL INTERIOR FACES OF PRECAST CONCRETE PANELS TO BE FINISHED SMOOTH
3. PLUMBING WALL CONSISTS OF TWO 4" CONCRETE MASONRY WALLS WITH 4" CAVITY
4. FOR PLACEMENT OF RESTROOM FIXTURES SEE A-9 SHEET
5. FOR DOOR AND ROOM FINISH SCHEDULES SEE SHEET A-12
6. ALL CORNERS AND OPENINGS ON BURNISHED CONCRETE MASONRY WALLS SHALL BE BULLNOSE
7. FINISH MASONRY EDGE AGAINST COLUMN. CAULK 1/2" JOINT TO MATCH MASONRY

WALL TYPE KEY:

MASONRY WALLS

DISTRICT: 01

COUNTY: POLK

PROJECT NUMBER: BG-1D20(000)--80-77

DES MOINES, IOWA

HIGHWAY MAINTENANCE GARAGE

ENLARGED OFFICE PLAN

IOWADOT
SMARTER | SIMPLER | CUSTOMER DRIVEN
OFFICE OF SUPPORT SERVICES
800 LINCOLN WAY
AMES, IOWA 50010 (515)239-1289

DATE: 21 MAY 2015

DRAWN BY: DESIGN TEAM

APPROVED: J BURNES

REVISIONS: 1 7-15-2015

SHEET OF

A-2R

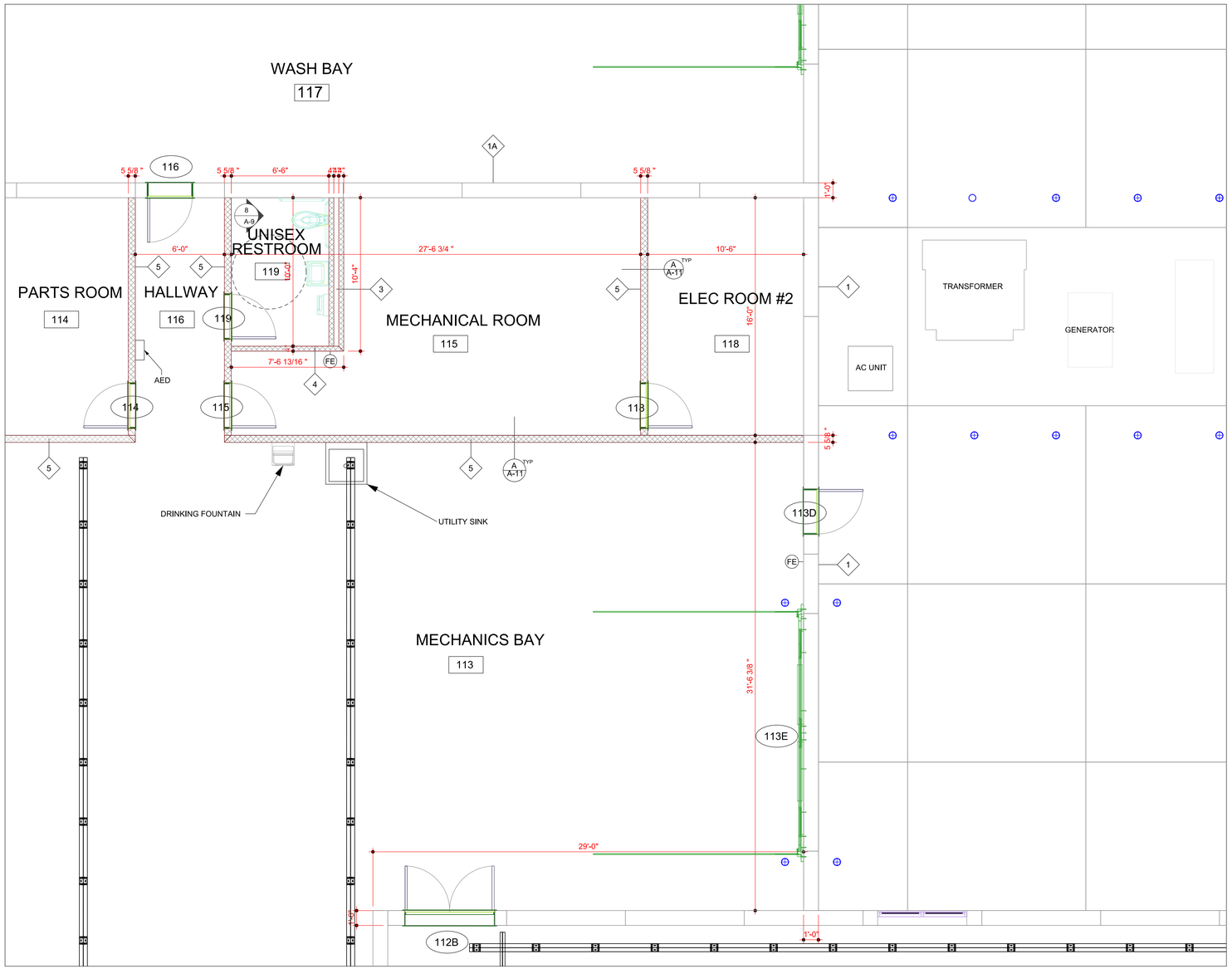

ENLARGED FLOOR PLAN

SCALE: 1/4"=1'-0"

NORTH

NOTES:

1. PROVIDE DOUBLE 'L' STEEL LINTELS AT MASONRY OPENINGS
2. ALL INTERIOR FACES OF PRECAST CONCRETE PANELS TO BE FINISHED SMOOTH
3. PLUMBING WALL CONSISTS OF TWO 4" CONCRETE MASONRY WALLS WITH 4" CAVITY
4. FOR PLACEMENT OF RESTROOM FIXTURES SEE A-9 SHEET
5. FOR DOOR AND ROOM FINISH SCHEDULES SEE SHEET A-12
6. ALL CORNERS AND OPENINGS ON BURNISHED CONCRETE MASONRY WALLS SHALL BE BULLNOSE
7. FINISH MASONRY EDGE AGAINST COLUMN. CAULK 1/2" JOINT TO MATCH MASONRY

WALL TYPE KEY:

MASONRY WALLS

DISTRICT: 01

COUNTY: POLK

PROJECT NUMBER: BG-1D20(000)--80-77

DES MOINES, IOWA

HIGHWAY MAINTENANCE GARAGE

ENLARGED FLOOR PLAN OF GARAGE MECHANICAL

IOWA DOT
SMARTER | SIMPLER | CUSTOMER DRIVEN
OFFICE OF SUPPORT SERVICES
800 LINCOLN WAY
AMES, IOWA 50010 (515)239-1299

DATE: 21 MAY 2015

DRAWN BY: DESIGN TEAM

APPROVED: J BURNES

REVISIONS: 1 7-15-2015

SHEET OF

A-3

NOTES:

1. TAPER ROOF INSULATION FROM FRONT TO BACK AT EPDM MANUFACTURERS RECOMMENDED SLOPE.
2. TAPERED INSULATION SHOULD MEET THICKNESS OF R-38 AT LOWEST POINT AT SCUPPER WITH THICKER INSULATION AT FRONT EXCEEDING R-38.
3. SEE SHEET MH100 FOR SIZES OF ROOF PENETRATIONS FOR EXHAUST FANS, MAKE UP AIR, AND SUPPLY AIR FANS.

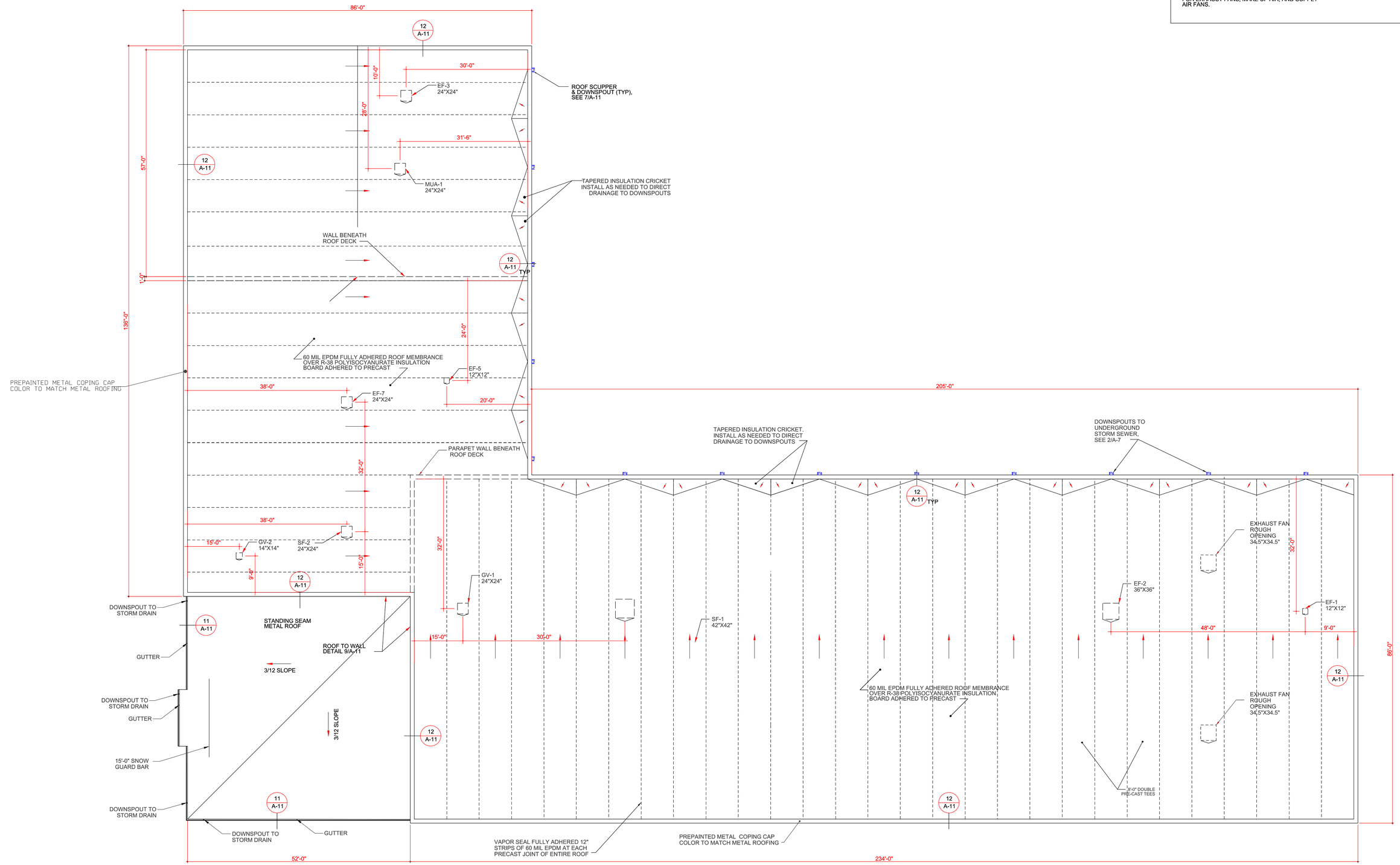

ROOF PLAN

SCALE: 3/32"=1'-0"

DISTRICT: 01

COUNTY: POLK

PROJECT NUMBER: BG-1D20(000)--80-77

DES MOINES, IOWA

HIGHWAY MAINTENANCE GARAGE

ROOF PLAN

IOWA DOT
SMARTER | SIMPLER | CUSTOMER DRIVEN
OFFICE OF SUPPORT SERVICES
800 LINCOLN WAY
AMES, IOWA 50010 (515)239-1289

DATE: 21 MAY 2015

DRAWN BY: DESIGN TEAM

APPROVED: J BURNES

REVISIONS: 1 7-15-2015

SHEET OF

A-6R

NOTES:

1. PLUMBING WALL CONSISTS OF TWO 4" CONCRETE MASONRY WALLS WITH 4" CAVITY
2. FOR RESTROOM FIXTURE PLACEMENT SEE SHEET A-9
3. FOR ROOM FINISH AND DOOR SCHEDULES SEE SHEET A-12
4. FOR PLUMBING FIXTURES SEE SHEET P-600
5. SEE PRECAST SUBMITTALS FOR ALL ROOF PANEL SLOPES
6. FOR FOOTING DETAILS SEE SHEET S001
7. CONSTRUCTION OF HARD CEILING SHALL BE 1 LAYER OF 5/8" GYPSUM WALLBOARD OVER 10 MIL VAPOR BARRIER ANCHORED TO 3/4" HAT CHANNEL AT 24" OC ANCHORED TO 2 1/2" BLACK IRON FRAMING SUSPENDED FROM STRUCTURE
8. CONTRACTOR MAY STOP BURNISHED BLOCK 6" ABOVE SUSPENDED CEILING AND CONTINUE WALL TO GYPSUM BOARD WITH CMU

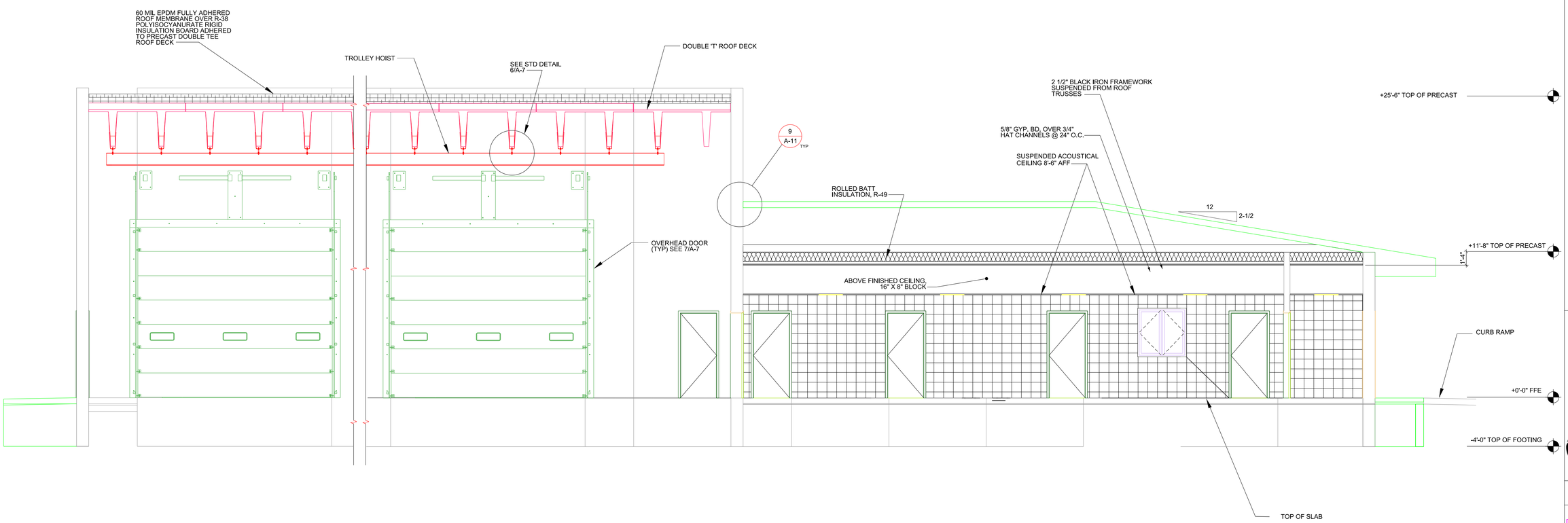

A
A-10

BUILDING SECTION

SCALE: 1/4"=1'-0"

DISTRICT: 01

COUNTY: POLK

PROJECT NUMBER: BG-1D20(000)--80-77

DES MOINES, IOWA

HIGHWAY MAINTENANCE GARAGE

BUILDING SECTION

IOWA DOT
SMARTER | SIMPLER | CUSTOMER DRIVEN
OFFICE OF SUPPORT SERVICES
800 LINCOLN WAY
AMES, IOWA 50010 (515)239-1299

DATE: 21 MAY 2015

DRAWN BY: DESIGN TEAM

APPROVED: J BURNES

REVISIONS: 1 7-15-2015

SHEET OF

A-10

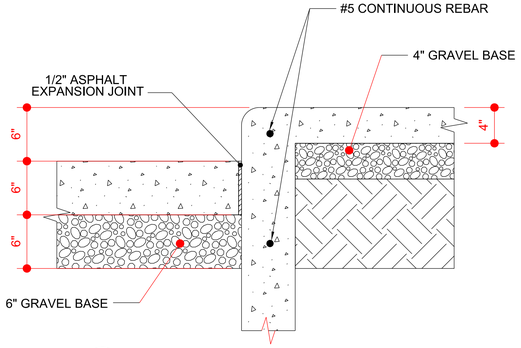

1 A-11 SIDEWALK CURB DETAIL
SCALE: N.T.S

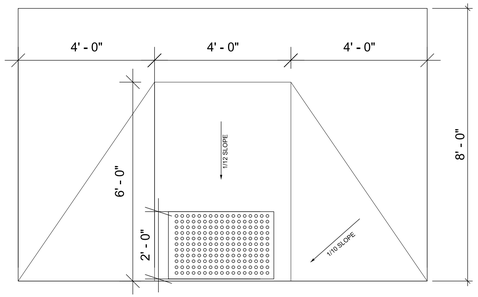

2 A-11 CURB RAMP PLAN
SCALE: N.T.S

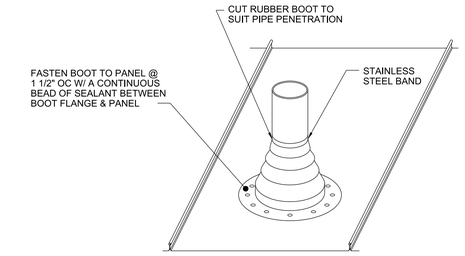

NOTE: THIS DETAIL IS SUITABLE FOR SQUARE AND RECTANGULAR ROOF CAPS. VERIFY W/ ROOF PANEL MFR FOR APPROVED METHOD

3 A-11 VENT FLASHING
SCALE: N.T.S

NOTE:
BOLLARD TO BE PIPE CUT (TORCH CUT NOT PERMITTED)

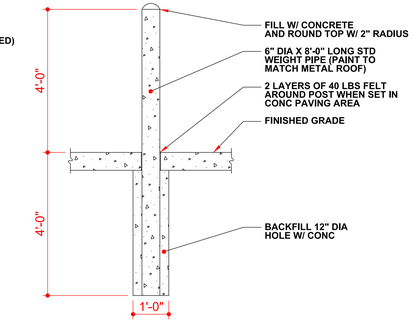

4 A-11 BOLLARD DETAIL
SCALE: 1/2"=1'-0"

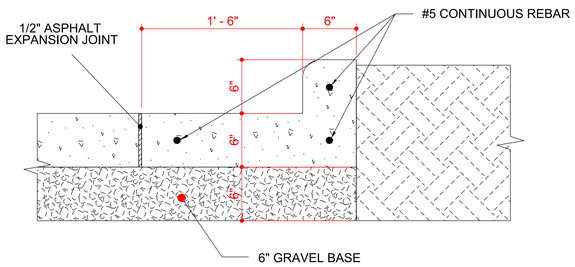

5 A-11 ROAD CURB DETAIL
SCALE: N.T.S

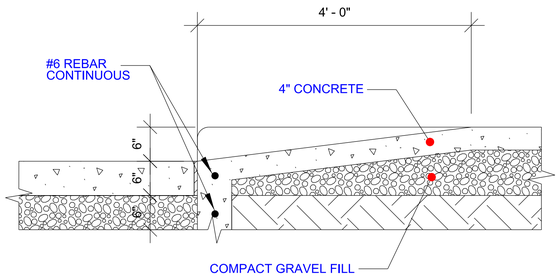

6 A-11 CURB RAMP DETAIL
SCALE: N.T.S

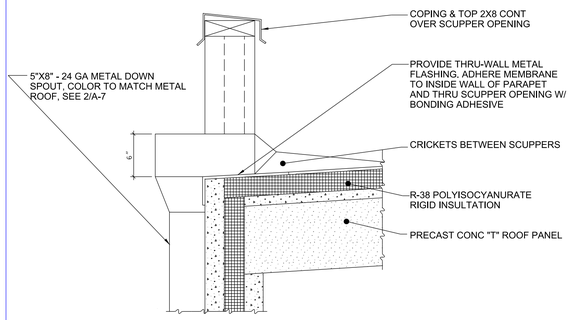

7 A-11 SCUPPER DETAIL
SCALE: N.T.S

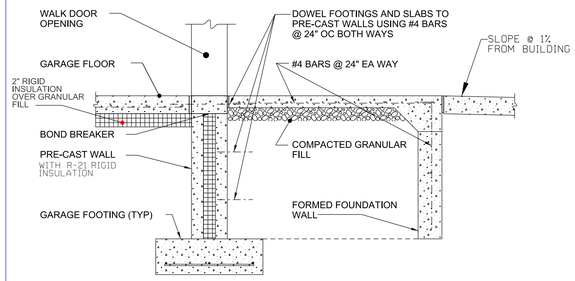

8 A-11 STOOP FOOTING AND SLAB
SCALE: N.T.S

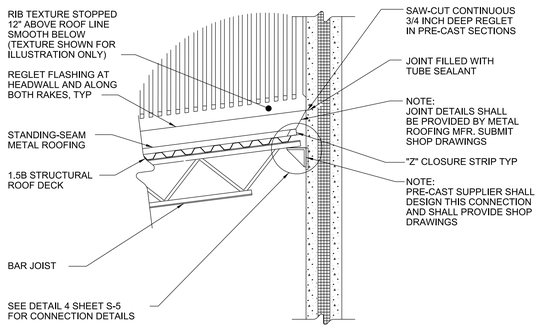

9 A-11 ROOF TO WALL DETAIL
SCALE: N.T.S

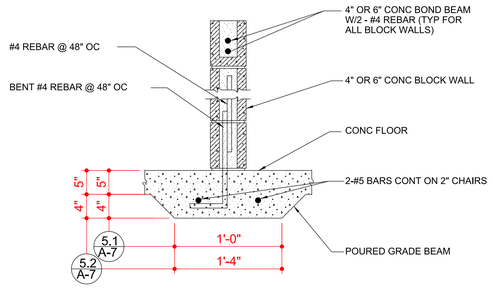

10 A-11 GRADE BEAM DETAIL
SCALE: N.T.S

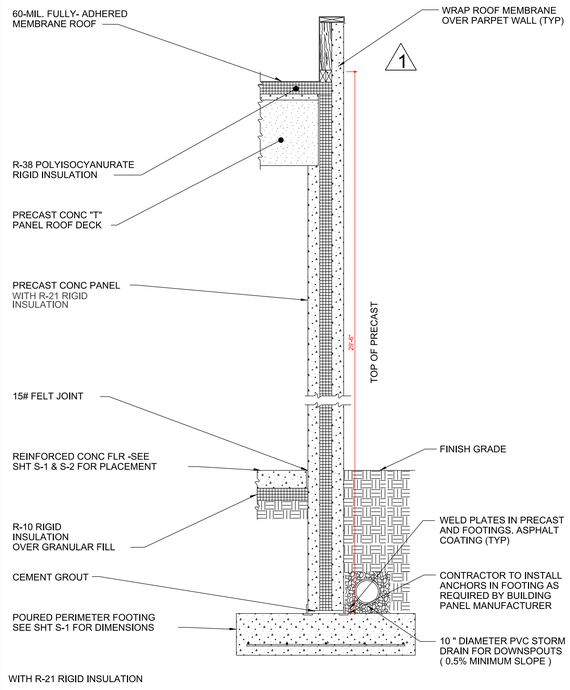

13 A-11 EXTERIOR WALL SECTION
SCALE: 1/2"=1'-0"

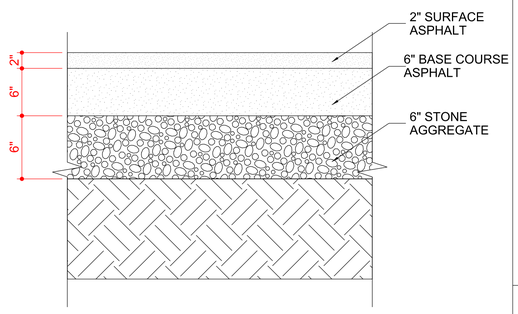

14 A-11 ASPHALT DRIVE DETAIL
SCALE: N.T.S

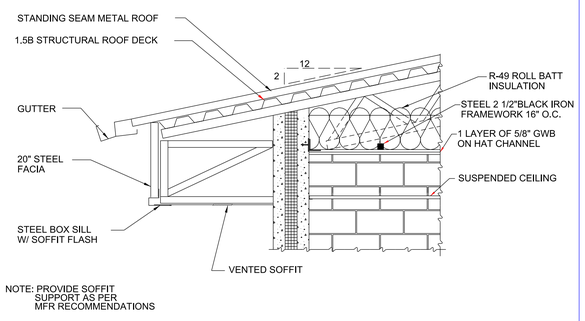

NOTE: PROVIDE SOFFIT SUPPORT AS PER MFR RECOMMENDATIONS

11 A-11 SOFFIT DETAIL
SCALE: 3/4" = 1'0"

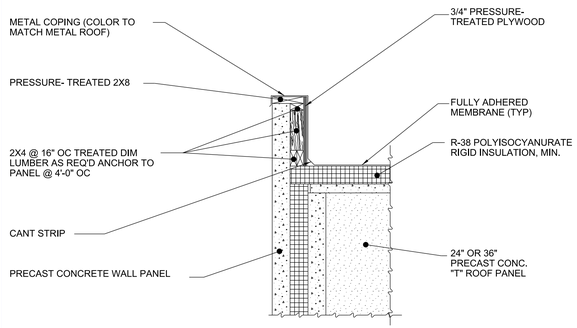

12 A-11 PARAPET DETAIL
SCALE: 3/4"=1'

DISTRICT: 01
COUNTY: POLK
PROJECT NUMBER: BG-1D20(000)--80-77

HIGHWAY MAINTENANCE GARAGE
DES MOINES, IOWA
WALL DETAIL, ROOF DETAILS, & SITE DETAILS

IOWADOT
SMARTER | SIMPLER | CUSTOMER DRIVEN
OFFICE OF SUPPORT SERVICES
800 LINCOLN WAY
AMES, IOWA 50010 (515)239-1299

DATE: 21 MAY 2015
DRAWN BY: DESIGN TEAM
APPROVED: J BURNES
REVISIONS: 1 7-15-2015

SHEET OF
A-11

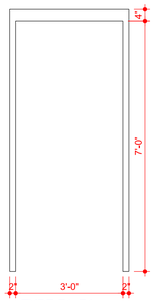

TYPE F1, F4
NO RATING

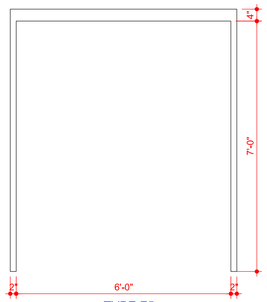

TYPE F5
NO RATING

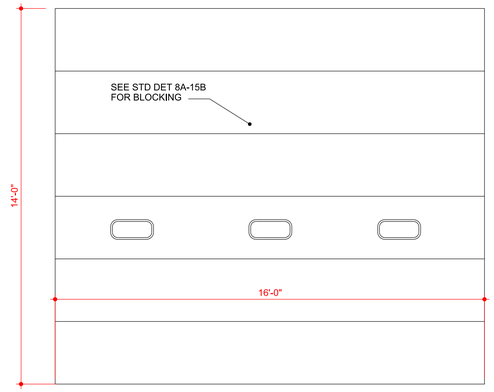

TYPE OH1

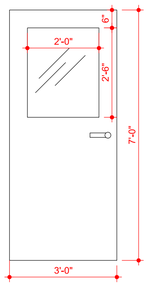

TYPE D1
NO RATING

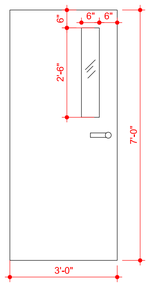

TYPE D2
NO RATING

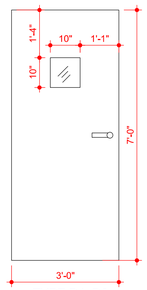

TYPE D4, D6
NO RATING

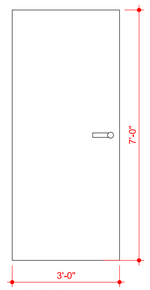

TYPE D7
NO RATING

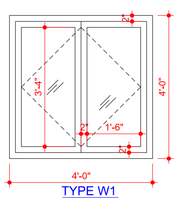

TYPE W1

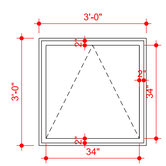

TYPE W2

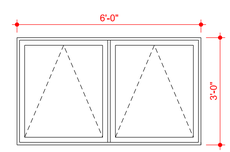

TYPE W3

DOOR & WINDOW ELEVATIONS

SCALE: 1/2"=1'-0"

OPENING NO. 100A

ROOM NAME 100

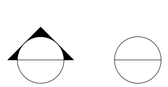

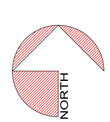

DOOR SCHEDULE

SCALE: 1/4"=1'-0"

1

GARAGE WINDOW SCHEDULE

OPENING NO.	SIZE W	SIZE H	TYPE	MATL	GLAZING SIZE W	GLAZING SIZE H	ROLLER SHADE	REMARKS
101A	4-0	4-0	W1	ALUM	2) 18	2) 40	YES	DOUBLE CASEMENT
101B	4-0	4-0	W1	ALUM	2) 18	2) 40	YES	DOUBLE CASEMENT
101C	4-0	4-0	W1	ALUM	2) 18	2) 40	YES	DOUBLE CASEMENT
103A	4-0	4-0	W1	ALUM	2) 18	2) 40	YES	DOUBLE CASEMENT
104A	4-0	4-0	W1	ALUM	2) 18	2) 40	YES	DOUBLE CASEMENT
104B	4-0	4-0	W1	ALUM	2) 18	2) 40	YES	DOUBLE CASEMENT
112R	6-0	3-0	W3	ALUM	2) 30	2) 30	NO	AWNING
112S	6-0	3-0	W3	ALUM	2) 30	2) 30	NO	AWNING
112T	6-0	3-0	W3	ALUM	2) 30	2) 30	NO	AWNING
112U	6-0	3-0	W3	ALUM	2) 30	2) 30	NO	AWNING
112V	6-0	3-0	W3	ALUM	2) 30	2) 30	NO	AWNING
112W	6-0	3-0	W3	ALUM	2) 30	2) 30	NO	AWNING
112X	6-0	3-0	W3	ALUM	2) 30	2) 30	NO	AWNING
112Y	6-0	3-0	W3	ALUM	2) 30	2) 30	NO	AWNING
112Z	6-0	3-0	W3	ALUM	2) 30	2) 30	NO	AWNING
112ZA	6-0	3-0	W3	ALUM	2) 30	2) 30	NO	AWNING
112ZB	6-0	3-0	W3	ALUM	2) 30	2) 30	NO	AWNING
113F	3-0	3-0	W2	ALUM	30	30	NO	AWNING
113G	6-0	3-0	W3	ALUM	2) 30	2) 30	NO	AWNING
114B	6-0	3-0	W3	ALUM	2) 30	2) 30	NO	AWNING
114C	6-0	3-0	W3	ALUM	2) 30	2) 30	NO	AWNING

KEY: ALUM - ALUMINUM, STL - STEEL, FBG-FIBER GLASS, SSTL - STAINLESS STEEL, PLC - POLYCARBONITE

DOOR HARDWARE SETS:

SEE SPECIFICATION SECTION 08 7100

GARAGE DOOR & FRAME SCHEDULE

OPENING NO.	SIZE W	SIZE H	DOOR TYPE	DOOR MATL	DOOR THK	DOOR GLASS	FRAME TYPE	FRAME MATL	FRAME WIDTH	FRAME HGT	HARD-WARE GROUP	REMARKS
100	3-0	7-0	D1	STL	1-3/4	24X30	F1	STL	3-4	7-4	HW 53	
101	3-0	7-0	D2	STL	1-3/4	6X30	F1	STL	3-4	7-4	HW 11	
102A	3-0	7-0	D2	STL	1-3/4	6X30	F1	STL	3-4	7-4	HW 2	
102B	3-0	7-0	D2	STL	1-3/4	6X30	F1	STL	3-4	7-4	HW 2	
104	3-0	7-0	D2	STL	1-3/4	6X30	F1	STL	3-4	7-4	HW 6	
105	3-0	7-0	D7	STL	1-3/4	---	F1	STL	3-4	7-4	HW 2	
106	3-0	7-0	D7	STL	1-3/4	---	F1	STL	3-4	7-4	HW 5	
107	3-0	7-0	D7	STL	1-3/4	---	F1	STL	3-4	7-4	HW 5	
108	3-0	7-0	D2	STL	1-3/4	6X30	F1	STL	3-4	7-4	HW 2	
109	3-0	7-0	D7	STL	1-3/4	---	F1	STL	3-4	7-4	HW 2	
110	3-0	7-0	D7	STL	1-3/4	---	F1	STL	3-4	7-4	HW 2	
111	3-0	7-0	D7	STL	1-3/4	---	F1	STL	3-4	7-4	HW 2	
112A	3-0	7-0	D4	STL	1-3/4	10X10	F1	STL	3-4	7-4	HW 13	
112B	6-0	7-0	D7	STL	1-3/4	---	F5	STL	6-4	7-4	HW 8F	DOUBLE DOOR
112C	3-0	7-0	D4	STL	1-3/4	10X10	F1	STL	3-4	7-4	HW 13	
112D	3-0	7-0	D4	STL	1-3/4	10X10	F1	STL	3-4	7-4	HW 13	
112E	3-0	7-0	D4	STL	1-3/4	10X10	F1	STL	3-4	7-4	HW 13	
112F	3-0	7-0	D4	STL	1-3/4	10X10	F1	STL	3-4	7-4	HW 13	
112G	16-0	14-0	OH1	STL	2	3-24X8	---	STL	---	---	NA	OPENER
112H	16-0	14-0	OH1	STL	2	3-24X8	---	STL	---	---	NA	OPENER
112I	16-0	14-0	OH1	STL	2	3-24X8	---	STL	---	---	NA	OPENER
112J	16-0	14-0	OH1	STL	2	3-24X8	---	STL	---	---	NA	OPENER
112K	16-0	14-0	OH1	STL	2	3-24X8	---	STL	---	---	NA	OPENER
112L	16-0	14-0	OH1	STL	2	3-24X8	---	STL	---	---	NA	OPENER
112M	16-0	14-0	OH1	STL	2	3-24X8	---	STL	---	---	NA	OPENER
112N	16-0	14-0	OH1	STL	2	3-24X8	---	STL	---	---	NA	OPENER
112O	16-0	14-0	OH1	STL	2	3-24X8	---	STL	---	---	NA	OPENER
112P	16-0	14-0	OH1	STL	2	3-24X8	---	STL	---	---	NA	OPENER
112Q	16-0	14-0	---	STL	2	3-24X8	---	STL	---	---	NA	OPENER
113A	3-0	7-0	D4	STL	1-3/4	10X10	F1	STL	3-4	7-4	HW 13	
113B	16-0	14-0	OH1	STL	2	3-24X8	---	STL	---	---	NA	OPENER
113C	16-0	14-0	DH1	STL	2	3-24X8	---	STL	---	---	NA	OPENER
113D	3-0	7-0	D4	STL	1-3/4	10X10	F1	STL	3-4	7-4	HW 13	
113E	16-0	14-0	OH1	STL	2	3-24X8	---	STL	---	---	NA	OPENER
114	3-0	7-0	D2	STL	1-3/4	6X30	F1	STL	3-4	7-4	HW 11	
115	3-0	7-0	D7	STL	1-3/4	----	F1	STL	3-4	7-4	HW 11	
116	3-0	7-0	D6	FBG	1-3/4	10X10	F4	FBG	3-4	7-4	HW 2	FIBERGLASS
117A	16-0	14-0	OH1	PLC	1-3/4	3-24X8	---	SSTL	---	---	NA	OPENER
117B	16-0	14-0	OH1	PLC	1-3/4	3-24X8	---	SSTL	---	---	NA	OPENER
117C	3-0	7-0	D6	FBG	1-3/4	10X10	F4	FBG	3-4	7-4	HW 13	
117D	3-0	7-0	D6	FBG	1-3/4	10X10	F4	FBG	3-4	7-4	HW 13	
117E	16-0	14-0	OH1	PLC	1-3/4	3-24X8	---	SSTL	---	---	NA	OPENER
117F	16-0	14-0	OH1	PLC	1-3/4	3-24X8	---	SSTL	---	---	NA	OPENER
118	3-0	7-0	D2	STL	1-3/4	6X30	F1	STL	3-4	7-4	HW 11	
119	3-0	7-0	D7	STL	1-3/4	---	F1	STL	3-4	7-4	HW 5	
120	3-0	7-0	D7	STL	1-3/4	---	F1	STL	3-4	7-4	HW 11	

GARAGE ROOM FINISH SCHEDULE

NO.	ROOM NAME	FLR	BASE	WALLS N	WALLS E	WALLS S	WALLS W	CLG	CLG HGT
100	VESTIBULE	F2	B1	W1	W1	W1	W2	C1	8'-6"
101	OFFICE	F2	B1	W1	W1	W2	W2	C1	8'-6"
102	CORRIDOR	F2	B1	W1	W2	W1	W1	C1	8'-6"
103	OPEN OFFICE	F2	B1	---	W1	W2	W1	C1	8'-6"
104	CONFERENCE	F2	B1	W2	W1	W1	W2	C1	8'-6"
105	COAT CLOSET	F2	B1	W2	W1	W1	W1	C3	10'-4"
106	MRR	F2	B1	W1	W1	W2	W1	C1	8'-6"
107	WRR	F2	B1	W1	W1	W2	W1	C1	8'-6"
108	CORRIDOR	F2	B1	W2	W1	---	W1	C1	8'-6"
109	MECH/UTILITY	F1	N/A	W5	W5	W3	W3	C3	10'-4"
110	JANITOR'S CLOSET	F1	B1	W3	W5	W3	W5	C3	10'-4"
111	STORAGE	F1	B1	W3	W5	W5	W3	C3	10'-4"
112	STORAGE BAYS	F1	N/A	W5	W5	W5	W5	C2	VAR.
113	MECHANICS BAY	F1	N/A	W3	W5	W5	W5	C2	VAR.
114	PARTS ROOM	F1	---	W5	WB	WB	W5	C2	VAR.
115	MECHANICAL ROOM 2	F1	---	W5	W3	W3	W3	C2	VAR.
116	HALLWAY	F1	---	W5	W3	---	W3	C2	VAR.
117	WASH BAYS	F1	---	W5	W5	W5	W5	C2	VAR.
118	ELEC ROOM #2	F1	---	W5	W5	W3	W3	C2	VAR.
119	UNISEX RR	F1	B1	W4	W4	W4	W2	C1	8'-6"
120	ELECTRICAL ROOM	F1	N/A	W5	W1	W1	W1	C3	10'-4"

ROOM FINISH KEY:

FLOORS:
F1 SEALED CONCRETE
F2 POLISHED CONCRETE

WALLS:
W1 BURNISHED BLOCK
W2 PRECAST PAINTED
W3 CMO UNPAINTED
W4 CMU PAINTED
W5 PRECAST UNFINISHED

CEILING:
C1 ACOUSTIC TILE
C2 EXPOSED STRUCTURE-UNFINISHED
C3 GYPSUM BOARD PAINTED

BASE:
B1 4" VINYL BASE

CONFERENCE ROOM CABINETS
P-LAM WILSONART
7925-38 MONTICELLO MAPLE

COUNTER TOP: WILSONART
4876-38 SHEER MESH

EXPOSED WOOD:
PAINT COLOR: SW 7030 ANEW GRAY

METAL DOOR JAMBS AND WINDOW FRAMES:
ENAMEL COLOR: SW 7031 MEGA GREIGE

METAL DOORS:
ENAMEL COLOR: SW 7030 ANEW GRAY

EXPOSED GYPSUM CEILING
PAINT COLOR WHITE

PAINTED PRECAST WALLS:
PT-1 SW 7030 ANEW GRAY

EXPOSED METAL FABRICATIONS
ENAMEL COLOR: SW 7030 ANEW GRAY

SOLID PLASTIC TOILET PARTITIONS:
COMTEC HINEY HIDERS
COLOR: SAND CASTLE

ROLLER SHADE FABRIC:
SWF CONTRACT SHEERWEAVE
VG4 SLATE

ROLLER SHADE FASCIA:
SWF CONTRACT
875 CLEAR SATIN ANODIZED

DISTRICT: 01

COUNTY: POLK

PROJECT NUMBER: BG-1D20(000)--80-77

DES MOINES, IOWA

HIGHWAY MAINTENANCE GARAGE

DOOR AND ROOM FINISH SCHEDULE

IOWA DOT
SMARTER | SIMPLER | CUSTOMER DRIVEN
OFFICE OF SUPPORT SERVICES
800 LINCOLN WAY
AMES, IOWA 50010 (515)239-1299

DATE: 21 MAY 2015

DRAWN BY: DESIGN TEAM

APPROVED: J BURNES

REVISIONS:
1 7-9-2015
1 7-15-2015

SHEET OF

A-12R2