SECTION 3: TECHNICAL SPECIFICATIONS

GENERAL

TS 1. Scope

Technical specifications define requirements for heavy-duty transit buses and commuter coaches, which, by the selection of specifically identified alternative configurations, may be used for both suburban express service and general service on urban arterial streets. Buses shall have a minimum expected life of twelve (12) years or 500,000 miles, whichever comes first, and are intended for the widest possible spectrum of passengers, including children, adults, the elderly and people with disabilities.

Classes to be bid (if available):

A: 26’ Class (26-29 ft) with option pricing for hybrid/CNG
B: 30’ Class (30-34 ft) with option pricing for hybrid/CNG
C: 35’ Class (35-39 ft) with option pricing for hybrid/CNG
D: 40’ Class (40-42 ft) with option pricing for hybrid/CNG
E: 60’ Articulated Class with option pricing for hybrid/CNG

TS 2. Definitions

Ambient Temperature: The temperature of the surrounding air. For testing purposes, ambient temperature must be between 16 °C (50 °F) and 38 °C (100 °F).

Analog Signals: A continuously variable signal that is solely dependent upon magnitude to express information content.

> **NOTE:** Analog signals are used to represent the state of variable devices such as rheostats, potentiometers, temperature probes, etc.

Audible Discrete Frequency: An audible discrete frequency is determined to exist if the sound power level in any 1/3-octave band exceeds the average of the sound power levels of the two adjacent 1/3-octave bands by 4 decibels (dB) or more

Base: The minimum required specification. Below “BASE” there may be a space titled “OPTIONS” This is to be filled in by the bidding vendor. All bids must be made on the base specifications only (per class) with the list of total options separate.

Battery Compartment: Low-voltage energy storage, i.e. 12/24 VDC batteries.

Battery Management System (BMS): Monitors energy, as well as temperature, cell or module voltages, and total pack voltage. The BMS adjusts the control strategy algorithms to maintain the batteries at uniform state of charge and optimal temperatures.

Braking Resistor: Device that converts electrical energy into heat, typically used as a retarder to supplement or replace the regenerative braking.

Burst Pressure: The highest pressure reached in a container during a burst test.

Capacity (fuel container): The water volume of a container in gallons (liters).

Cells: Individual components (i.e., battery or capacitor cells).

Code: A legal requirement.

Combination Gas Relief Device: A relief device that is activated by a combination of high pressures or high temperatures, acting either independently or together.

Composite Container for CNG: A container fabricated of two or more materials that interact to facilitate the container design criteria.

Compressed Natural Gas (CNG): Mixtures of hydrocarbon gases and vapors consisting principally of methane in gaseous form that has been compressed for use as a vehicular fuel.

Container: A pressure vessel, cylinder or cylinders permanently manifolded together, used to store CNG.

Container Appurtenances: Devices connected to container openings for safety, control or operating purposes.

Container Valve: A valve connected directly to a container outlet.

Curb Weight: Weight of vehicle, including maximum fuel, oil and coolant; and all equipment required for operation and required by this Specification, but without passengers or driver.

dBA: Decibels with reference to 0.0002 microbar as measured on the “A” scale.

DC to DC Converter: A module that converts a source of direct current from one voltage level to another.

Default Configuration Bus: The bus described if no alternatives are selected. Signing, colors, the destination sign reading list and other information must be provided by the Agency.

Defueling: The process of removing fuel from a tank.

Defueling Port. Device that allows for vehicle defueling, or the point at which this occurs.

Destroyed: Physically made permanently unusable.

Discrete Signal: A signal that can take only pre-defined values, usually of a binary 0 or 1 nature, where 0 is battery ground potential and 1 is a defined battery positive potential.

DPF: Diesel particulate filter.

Driver’s Eye Range: The 95th-percentile ellipse defined in SAE Recommended Practice J941, except that the height of the ellipse shall be determined from the seat at its reference height.

Energy Density: The relationship between the weight of an energy storage device and its power output in units of watt-hours per kilogram (Wh/kg).

Energy Storage System (ESS): A component or system of components that stores energy and for which its supply of energy is rechargeable by the on-vehicle system (engine/regenerative braking/ generator) or an off-vehicle energy source.

Fill Pressure for CNG: The pressure attained at the actual time of filling. Fill pressure varies according to the gas temperatures in the container, which are dependent on the charging parameters and the ambient conditions. The maximum dispensed pressure shall not exceed 125 percent of service pressure.

Flow Capacity: For natural gas flow, this is the capacity in volume per unit time (normal cubic meters/minute or standard cubic feet per minute) discharged at the required flow rating pressure.

Fuel Line: The pipe, tubing or hose on a vehicle, including all related fittings, through which natural gas passes.

Fusible Material: A metal, alloy or other material capable of being melted by heat.

Fire Resistant: Materials that have a flame spread index less than 150 as measured in a radiant panel flame test per ASTM-E 162-90.

Fireproof: Materials that will not burn or melt at temperatures less than 2000 °F.

Free Floor Space: Floor area available to standees, excluding the area under seats, area occupied by feet of seated passengers, the vestibule area forward of the standee line, and any floor space indicated by manufacturer as non-standee areas, such as the floor space "swept" by passenger doors during operation. Floor area of 1.5 sq ft shall be allocated for the feet of each seated passenger protruding into the standee area.

Fuel Management System: Natural gas fuel system components that control or contribute to engine air fuel mixing and metering, and the ignition and combustion of a given air-fuel mixture. The fuel management system would include, but is not limited to, reducer/regulator valves, fuel metering equipment (e.g. carburetor, injectors), sensors (e.g., main throttle, wastegate).

GAWR (Gross Axle Weight Rated): The maximum total weight as determined by the axle manufacturer, at which the axle can be safely and reliably operated for its intended purpose.

Gross Load: 150 lbs for every designed passenger seating position, for the driver, and for each 1.5 sq ft of free floor space.

GVW (Gross Vehicle Weight): Curb weight plus gross load.

GVWR (Gross Vehicle Weight Rated): The maximum total weight as determined by the vehicle manufacturer, at which the vehicle can be safely and reliably operated for its intended purpose.

High Pressure: Those portions of the CNG fuel system that see full container or cylinder pressure.

High Voltage (HV): Greater than 50 V (AC and DC).

Hose: Flexible line.

Hybrid: A vehicle that uses two or more distinct power sources to propel the vehicle.

Hybrid System Controller (HSC): Regulates energy flow throughout hybrid system components in order to provide motive performance and accessory loads, as applicable, while maintaining critical system parameters (voltages, currents, temperatures, etc.) within specified operating ranges.

Hybrid Drive System (HDS): The mechanical and/or electromechanical components, including the engine, traction motors and energy storage system, which comprise the traction drive portion of the hybrid propulsion system.

Intermediate Pressure: The portion of a CNG system after the first pressure regulator, but before the engine pressure regulator. Intermediate pressure on a CNG vehicle is generally from 3.5 to 0.5 MPa (510 to 70 psi).

Inverter: A module that converts DC to and from AC.

Labeled: Equipment or materials to which has been attached a label, symbol or other identifying mark of an organization, which is acceptable to the authority having jurisdiction and concerned with product evaluation, which maintains periodic inspection of production labeled equipment or materials, and by whose labeling the manufacturer indicates compliance with appropriate standards or performance in a specified manner.

Leakage: Release of contents through a Defect or a crack. See *Rupture*.

Line: All tubes, flexible and hard, that carry fluids.

Liner: Inner gas-tight container or gas container to which the overwrap is applied.

Local Regulations: Regulations below the state level.

Low-Floor Bus: A bus that, between at least the front (entrance) and rear (exit) doors, has a floor sufficiently low and level so as to remove the need for steps in the aisle between the doors and in the vicinity of these doors.

Low Voltage (LV): 50 V or less (AC and DC).

Lower Explosive Limit: The lowest concentration of gas where, given an ignition source, combustion is possible.

Maximum Service Temperature: The maximum temperature to which a container/cylinder will be subjected in normal service.

Metallic Hose: A hose whose strength depends primarily on the strength of its metallic parts; it can have metallic liners or covers, or both.

Metering Valve: A valve intended to control the rate of flow of natural gas.

Module: An assembly of individual components

Motor (Electric): A device that converts electrical energy into mechanical energy.

Motor (Traction): An electric motor used to power the driving wheels of the bus.

Operating Pressure: The varying pressure developed in a container during service.

Options: An optional specification condition to the base bus configuration. The base/minimum specification will be stated and a list of available options will be provided by the bidder. After each "Base" section, there may be an "Options" section that the bidder must fill in all available options. A complied list of all options and pricing for those options must accompany a bid for each vehicle class and also as part of the order form. If no options is available, please enter "NA"

Physical Layer: The first layer of the seven-layer International Standards Organization (ISO) Open Systems Interconnect (OSI) reference model. This provides the mechanical, electrical, functional and procedural characteristics required to gain access to the transmission medium (e.g., cable) and is responsible for transporting binary information between computerized systems.

Pipe: Nonflexible line.

Pressure Relief Device (PRD):A pressure and/or temperature activated device used to vent the container/cylinder contents and thereby prevent rupture of an NGV fuel container/cylinder, when subjected to a standard fire test as required by fuel container/cylinder standards.

> **NOTE:** Since this is a pressure-activated device, it may not protect against rupture of the container when the application of heat weakens the container to the point where its rupture pressure is less than the rated burst pressure of the relief device, particularly if the container is partially full.

Power: Work or energy divided by time

Power Density: Power divided by mass, volume or area.

Propulsion System: System that provides propulsion for the vehicle proportional to operator commands. Includes, as applicable, engine, transmission, traction motors, the hybrid drive system, (HDS), energy storage system (ESS), and system controllers including all wiring and converter/inverter.

Real-Time Clock (RTC): Computer clock that keeps track of the current time.

Regenerative Braking: Deceleration of the bus by switching motors to act as generators, which return vehicle kinetic energy to the energy storage system.

Rejectable Damage: In terms of NGV fuel containers/cylinders, this is damage as outlined in CGA C-6.4, "Methods for External Visual Inspection of Natural Gas Vehicle Fuel Containers and Their Installations," and in agreement with the manufacturer's recommendations.

Retarder: Device used to augment or replace some of the functions of primary friction based braking systems of the bus.

Rupture: Sudden and unstable damage propagation in the structural components of the container resulting in a loss of contents. See *Leakage*.

Seated Load: 150 lbs for every designed passenger seating position and for the driver.

SLW (Seated Load Weight): Curb weight plus seated load.

Serial Data Signals. A current loop based representation of ASCII or alphanumeric data used for transferring information between devices by transmitting a sequence of individual bits in a prearranged order of significance.

> **NOTE:** An example is the communication that takes place between two or more electronic components with the ability to process and store information.

Service Pressure: The settled pressure at a uniform gas temperature of 21 °C (70 °F) and full gas content. It is the pressure for which the equipment has been constructed, under normal conditions. Also referred to as the nominal service pressure or working pressure.

Settled Pressure: The gas pressure when a given settled temperature, usually 21 °C (70 °F), is reached.

Settled Temperature: The uniform gas temperature after any change in temperature caused by filling has dissipated.

Solid State Alternator: A module that converts high-voltage DC to low-voltage DC (typically 12/24 V systems).

Sources of Ignition: Devices or equipment that because of their modes of use or operation, are capable of providing sufficient thermal energy to ignite flammable compressed natural gas-air mixtures when introduced into such a mixture, or when such a mixture comes into contact with them.

Special Tools: Tools not normally stocked by the Agency.

Specification: A particular or detailed statement, account or listing of the various elements, materials, dimensions, etc. involved in the manufacturing and construction of a product.

Standard: A firm guideline from a consensus group. Standards referenced in “Section 6: Technical Specifications” are the latest revisions unless otherwise stated.

Standee Line: A line marked across the bus aisle to designate the forward area that passengers may not occupy when the bus is moving.

State of Charge (SOC): Quantity of electric energy remaining in the battery relative to the maximum rated amp-hour (Ah) capacity of the battery expressed in a percentage. This is a dynamic measurement used for the energy storage system. A full SOC indicates that the energy storage system cannot accept further charging from the engine-driven generator or the regenerative braking system.

Stress Loops: The “pigtails” commonly used to absorb flexing in piping.

Structure: The basic body, including floor deck material and installation, load-bearing external panels, structural components, axle mounting provisions and suspension beams and attachment points.

Thermally Activated Gas Relief Device: A relief device that is activated by high temperatures and generally contains a fusible material.

> **NOTE:** Since this is a thermally activated device, it does not protect against over-pressure from improper charging practices.

Wheelchair: A mobility aid belonging to any class of three- or four-wheeled devices, usable indoors, designed for and used by individuals with mobility impairments, whether operated manually or powered. A “common wheelchair” is such a device that does not exceed 30 in. in width and 48 in. in length measured 2 in. above the ground, and does not weigh more than 600 lbs when occupied.

TS 3. Referenced Publications

The documents or portions thereof referenced within this specification shall be considered part of the requirements of the specification. The edition indicated for each referenced document is the current edition, as of the date of the APTA issuance of this specification.

TS 4. Legal Requirements

The Contractor shall comply with all applicable federal, state and local regulations. These shall include but not be limited to ADA, as well as state and local accessibility, safety and security requirements. Local regulations are defined as those below the state level.

Buses shall meet all applicable FMVSS regulations and shall accommodate all applicable FMCSR regulations in effect at the location of the Agency and the date of manufacture.

In the event of any conflict between the requirements of these specifications and any applicable legal requirement, the legal requirement shall prevail. Technical requirements that exceed the legal requirements are not considered to conflict.

TS 5. Overall Requirements

The Contractor shall ensure that the application and installation of major bus subcomponents and systems are compliant with all such subcomponent vendors’ requirements and recommendations. Contractor and Agency shall identify subcomponent vendors that shall submit installation/application approval documents with the completion of a pilot or lead bus. Components used in the vehicle shall be of heavy-duty design and proven in transit service.

TS 5.1 Weight

It shall be a design goal to construct each bus as light in weight as possible without degradation of safety, appearance, comfort, traction or performance.

Buses at a capacity load shall not exceed the tire factor limits, brake test criteria or structural design criteria.

TS 5.2 Capacity

The vehicle shall be designed to carry the gross vehicle weight, which shall not exceed the bus GVWR.

TS 5.3 Service Life

The minimum useful design life of the bus in transit service shall be at least twelve (12) years or 500,000 miles. It shall be capable of operating at least 40,000 miles per year, including the 12th year.

TS 5.4 Maintenance and Inspection

Scheduled maintenance tasks shall be related and shall be in accordance with the manufacturer’s recommended preventative maintenance schedule (along with routine daily service performed during the fueling operations).

Test ports, as required, shall be provided for commonly checked functions on the bus, such as air intake, exhaust, hydraulic, pneumatic, charge-air and engine cooling systems.

The coach manufacturer shall give prime consideration to the routine problems of maintaining the vehicle. All coach components and systems, both mechanical and electrical, which will require periodic physical Work or inspection processes shall be installed so that a minimum of time is consumed in gaining access to the critical repair areas. It shall not be necessary to disassemble portions of the coach structure and/or equipment such as seats and flooring under seats in order to gain access to these areas. Each coach shall be designed to facilitate the disassembly, reassembly, servicing or maintenance, using tools and equipment that are normally available as standard commercial items.

Requirements for the use of unique specialized tools will be minimized. The body and structure of the coach shall be designed for ease of maintenance and repair. Individual panels or other equipment that may be damaged in normal service shall be repairable or replaceable. Ease of repair shall be related to the vulnerability of the item to damage in service.

Contractor shall provide a list of all special tools and pricing required for maintaining this equipment. Said list shall be submitted as a supplement to the Pricing Schedule.

> **NOTE:** Tools such as compartment door keys, bellows gauges and other tools that are required for daily maintenance and inspections shall not be included in the special tool list and shall be furnished for each coach.

TS 5.5 Interchangeability

Unless otherwise agreed, all units and components procured under this Contract, whether provided by Suppliers or manufactured by the Contractor, shall be duplicates in design, manufacture and installation to ensure interchangeability among buses in each order group in this procurement. This interchangeability shall extend to the individual components as well as to their locations in the buses. These components shall include, but are not limited to, passenger window hardware, interior trim, lamps, lamp lenses and seat assemblies. Components with non-identical functions shall not be, or appear to be, interchangeable.

Any one component or unit used in the construction of these buses shall be an exact duplicate in design, manufacture and assembly for each bus in each order group in this Contract. Contractor shall identify and secure approval for any changes in components or unit construction provided within a Contract.

In the event that the Contractor is unable to comply with the interchangeability requirement, the Contractor must notify the Agency and obtain the Agency's prior written approval, including any changes in pricing.

Agency shall review proposed product changes on a case-by-case basis and shall have the right to require extended warranties to ensure that product changes perform at least as well as the originally supplied products.

TS 5.6 Training

BASE

No training shall be provided

OPTIONS

> **NOTE**: The purchasing agency (if purchasing training as an option) will specify where training shall occur, the total number of hours of instruction it wants to be provided, what items it expects the curriculum to cover, and the format in which it expects the training and teaching aids to be provided (print, DVD, etc.).

TS 5.6.1 Technical/Service Representatives

The Contractor shall, at its own expense, have one or more competent technical service representatives available on request to assist the Agency in the solution of engineering or design problems within the scope of the specifications that may arise during the warranty period. This does not relieve the Contractor of responsibilities under the provisions of "Section 7: Warranty Requirements."

TS 5.7 Operating Environment

BASE

The bus shall achieve normal operation in ambient temperature ranges of 10 ºF to 115 ºF, at relative humidity between 5 percent and 100 percent, and at altitudes up to 3000 ft above sea level. Degradation of performance due to atmospheric conditions shall be minimized at temperatures below 10 °F, above 115 °F or at altitudes above 3000 ft. Altitude requirements above 3000 ft will need separate discussions with the engine manufacturer to ensure that performance requirements are not compromised. Speed, gradability and acceleration performance requirements shall be met at, or corrected to, 77 °F, 29.31 in. Hg, dry air per SAE J1995.

TS 5.8 Noise

TS 5.8.1 Interior Noise

The combination of inner and outer panels and any material used between them shall provide sufficient sound insulation so that a sound source with a level of 80 dBA measured at the outside skin of the bus shall have a sound level of 65 dBA or less at any point inside the bus. These conditions shall prevail with all openings, including doors and windows, closed and with the engine and accessories switched off.

The bus-generated noise level experienced by a passenger at any seat location in the bus shall not exceed 80 dBA. The driver area shall not experience a noise level of more than 75 dBA. Measurements of interior noise levels shall be taken in accordance with ISO 3381. An exception shall be made for the turntable area, which shall be considered a separate environment.

TS 5.8.2 Exterior Noise

Airborne noise generated by the bus and measured from either side shall not exceed 80 dBA under full power acceleration when operated at 0 to 35 mph at curb weight. The maximum noise level generated by the bus pulling away from a stop at full power shall not exceed 83 dBA. The bus-generated noise at curb idle shall not exceed 65 dBA. If the noise contains an audible discrete frequency, a penalty of 5 dBA shall be added to the sound level measured. The Contractor shall comply with the exterior noise requirements defined in local laws and ordinances identified by the Agency and SAE J366.

BASE

Noise level should be as stated.

TS 5.9 Fire Safety

The bus shall be designed and manufactured in accordance with all applicable fire safety and smoke emission regulations. These provisions shall include the use of fire-retardant/low-smoke materials, fire detection systems, bulkheads and facilitation of passenger evacuation.

TS 5.9.1 Materials

BASE

All materials used in the construction of the passenger compartment of the bus shall be in accordance with the Recommended Fire Safety Practices defined in FMVSS 302.

OPTIONS:

TS 5.10 Fire Suppression

BASE

No fire suppression system.

OPTIONS:

TS 5.11 Respect for the Environment

In the design and manufacture of the bus, the Contractor shall make every effort to reduce the amount of potentially hazardous waste. In accordance with Section 6002 of the Resource Conservation and Recovery Act, the Contractor shall use, whenever possible and allowed by the specifications, recycled materials in the manufacture of the bus.

DIMENSIONS

TS 6. Physical Size

With exceptions such as exterior mirrors, marker and signal lights, bumpers, fender skirts, washers, wipers, ad frames, cameras, object detection systems, bicycle racks, feelers and rub rails, the bus shall have the following overall dimensions as shown in **Figure 1** at static conditions and design height.

FIGURE 1
Transit Bus Exterior Dimensions

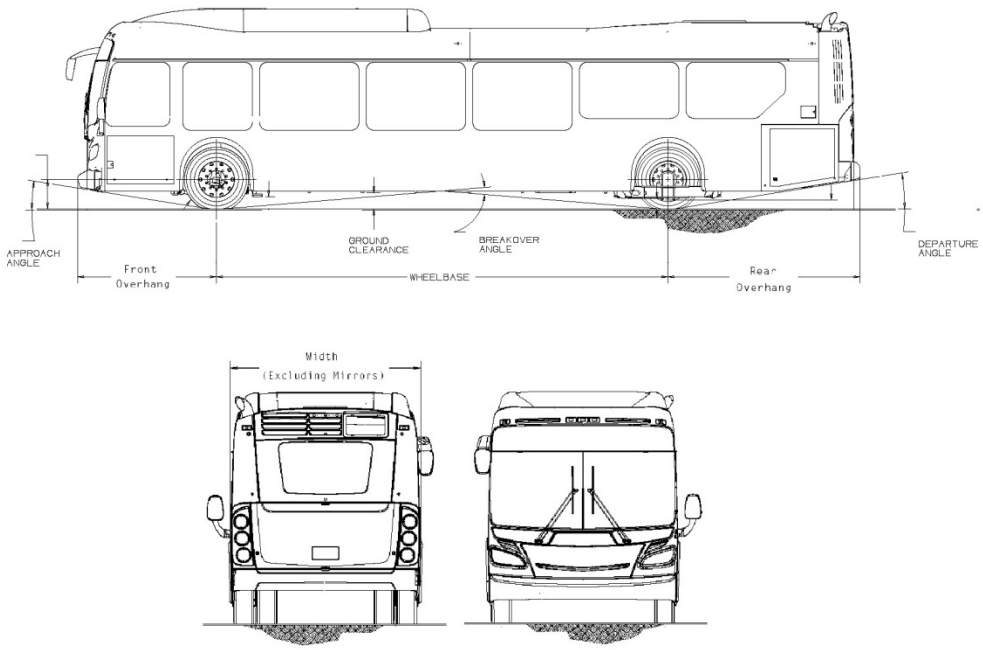

TS 6.1 Bus Length

For ease of use, the following tolerances will be allowable for each given bus length. Bus length is determined as the measurement from bumper to bumper.

- **26 ft bus:** 26 ft to 29 ft, 11 in.
- **30 ft bus:** 30 ft to 34 feet, 11 in.
- **35 ft bus:** 35 ft to 39 ft, 11 in.
- **40 ft bus:** 40 ft to 44 ft, 11 in.
- **60 ft (articulated) bus:** 59 to 65 ft

TS 6.2 Bus Width

TS 6.2.1 Transit Coach

BASE

102 in. Width Bus

Body width shall be 102 in. (+0, -1 in.).

TS 6.3 Bus Height

BASE

Maximum Overall Height (Diesel)

Maximum overall height shall be 126 in., including all rigid, roof-mounted items such as A/C, exhaust, fuel system and cover, etc. (Maximum Overall Height (Diesel)

NOTE: For the Iowa City/Coralville metro area transit properties, maximum overall height shall be 123 in., including all rigid, roof mounted items such as A/C, exhaust, fuel systems, cover, etc. This height maximum is required due to a low clearance bridge over a roadway which all transit systems use routinely. All bidders must specify whether or not they can meet the Iowa City requirement

_____ yes _____no

BASE

Maximum Overall Height (Diesel-Electric Hybrid)

Maximum overall height shall be 130 in., including all rigid, roof-mounted items such as A/C, exhaust, fuel system and cover, etc.

BASE

Maximum Overall Height (CNG)

Maximum overall height (with CNG tank access doors closed) shall be 133 in., including all rigid, roof-mounted items such as A/C, exhaust, fuel system and cover, etc.

TS 6.4 Step Height

TS 6.4.1 Transit Coach

The step height shall not exceed 14 in. at either doorway without kneeling. A maximum of two steps are allowed to accommodate a raised aisle floor in the rear of the bus.

TS 6.5 Underbody Clearance

The bus shall maintain the minimum clearance dimensions as defined and shown in Figure 2 of SAE Standard J689, regardless of load up to the gross vehicle weight rating.

TS 6.6 Ramp Clearances

The approach angle is the angle measured between a line tangent to the front tire static loaded radius arc and the initial point of structural interference forward of the front tire to the ground.

The departure angle is the angle measured between a line tangent to the rear tire static loaded radius arc and the initial point of structural interference rearward of the rear tire to the ground.

The breakover angle is the angle measured between two lines tangent to the front and rear tire static loaded radius and intersecting at a point on the underside of the vehicle that defines the largest ramp over which the vehicle can roll.

BASE

Refer to **Table 2a**.

TABLE 2a

Default Breakover Angle

Angle	30 to 45 ft Bus	60 ft Bus
Approach	9 deg (min.)	9 deg (min.)
Front breakover	9 deg (min.)	12 deg (min.)
Rear breakover (articulated only)	n/a	9 deg (min.)
Departure	9 deg (min.)	9 deg (min.)

TS 6.7 Ground Clearance

Ground clearance shall be no less than 10 in., (8 in. at jacking pad) except within the axle zone and wheel area.

Axle zone clearance, which is the projected area between tires and wheels on the same axial centerline, shall be no less than 5.6 in.

Wheel area clearance shall be no less than 8 in. for parts fixed to the bus body and 6 in. for parts that move vertically with the axles.

– **FIGURE 2**

Transit Bus Minimum Road Clearance

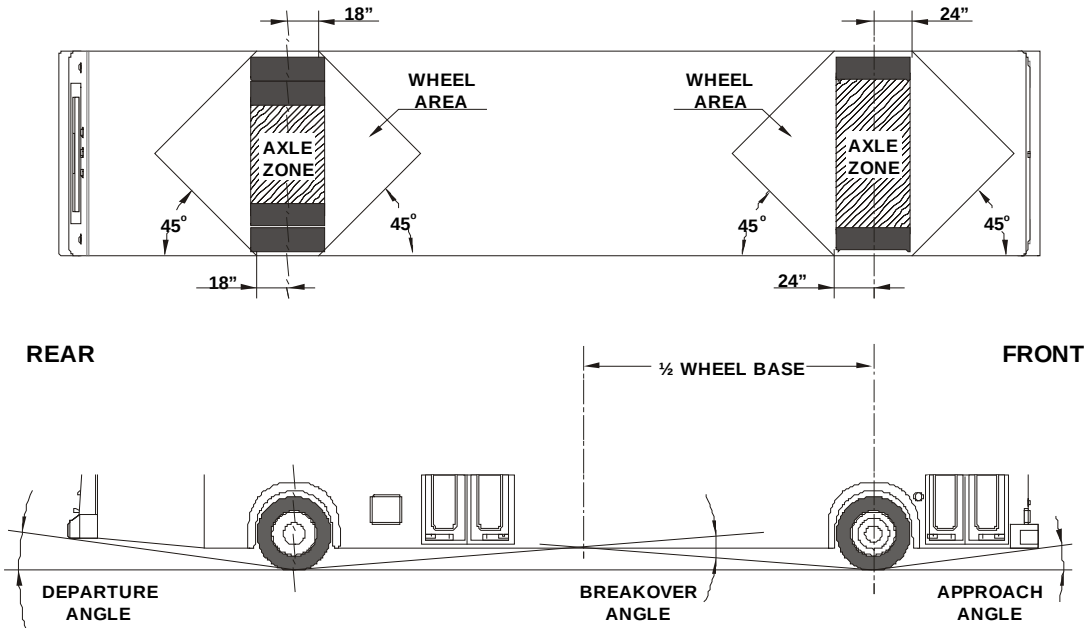

TS 6.8 Floor Height

TS 6.8.1 Transit Coach

Height of the step above the street shall be no more than 15.5 in. measured at the centerline of the front and rear doorway. All floor measurements shall be with the bus at the design running height and on a level surface and with the standard installed tires. A maximum of two steps are allowed to accommodate a raised aisle floor in the rear of the bus.

TS 6.9 Interior Headroom

Headroom above the aisle and at the centerline of the aisle seats shall be no less than 78 in. in the forward half of the bus tapering to no less than 74 in. forward of the rear settee. At the centerline of the window seats, headroom shall be no lower than 65 in., except for parcel racks and reading lights, if specified. Headroom at the back of the rear bench seat may be reduced to a minimum of 56 in., but it shall increase to the ceiling height at the front of the seat cushion. In any area of the bus directly over the head of a seated passenger and positioned where a passenger entering or leaving the seat is prone to strike his or her head, padding shall be provided on the overhead paneling.

VEHICLE PERFORMANCE

TS 7. Power Requirements

The propulsion system shall be sized to provide sufficient power to enable the bus to meet the defined acceleration, top speed and gradability requirements, and operate all propulsion-driven accessories using actual road test results and computerized vehicle performance data.

TS 7.1 Top Speed

BASE

The bus shall be capable of achieving a top speed of 65 mph on a straight, level road at GVWR with all accessories operating. The bus shall be capable of safely maintaining the vehicle speed according to the recommendations by the tire manufacturer.

NOTE: Values are assumed to be sustained. Manufacturer shall supply Agency with data if there is a variance between peak performance and sustained vehicle performance.

TS 7.2 Gradability

Gradability requirements shall be met on grades with a dry commercial asphalt or concrete pavement at GVWR with all accessories operating.

BASE

The propulsion system shall enable the bus to achieve and maintain a speed of 40 mph on a 2½ percent ascending grade and 15 mph on a 10 percent ascending grade continuous.

NOTE: Values are assumed to be sustained. Manufacturer shall supply Agency with data if there is a variance between peak performance and sustained vehicle performance.

TS 7.3 Acceleration

TS 7.3.1 Non-Hybrid

The acceleration shall meet the requirements in **Table 3** below and shall be sufficiently gradual and smooth to prevent throwing standing passengers off-balance. Acceleration measurement shall commence when the accelerator is depressed.

TABLE 3

Maximum Start Acceleration Times on a Level Surface[1]

Speed (mph)	Maximum time (seconds)
10	5
20	10
30	18
40	30
50	60
Top speed	

1. Vehicle weight = GVWR

TS 7.3.2 Acceleration Hybrid

The propulsion and braking systems shall meet the performance requirements of the Duty Cycle.

Braking application and performance shall remain consistent regardless of hybrid system state of charge (SOC) or other variances related to regenerative braking.

The system shall be programmable to allow optimization of acceleration and deceleration rate. Performance may be affected when reprogramming. The manufacturer shall supply the new performance data.

TS 7.4 Operating Range

The operating range of the coach shall be designed to meet the operating profile as stated in the "Design Operating Profile" section.

TS 7.4.1 Diesel (Transit Coach)

BASE

The operating range of the coach when run on the FTA ABD Cycle shall be at least 350 miles (560 km) or 20 hours with full fuel capacity.

TS 7.4.2 Hybrid (Transit Coach)

BASE

The operating range of the coach when run on the FTA ABD Cycle shall be at least 350 miles (560 km) or 20 hours with full fuel capacity.

TS 7.4.3 CNG

BASE

The operating range of the coach when run on the FTA ABD cycle shall be at least 350 miles or 20 hours with an initial gas-settled pressure of 3600 psi at 70 °F.

TS 8. Fuel Economy (Design Operating Profile)

Test results from the FTA ABD Cycle economy tests or other applicable test procedures shall be provided to the Agency. Results shall include vehicle configuration and test environment information. Fuel economy data shall be provided for each design operating profile. The design operating profile is assumed to be defined by the FTA ABD Cycle.

Fuel economy tests shall be run on these four duty cycles:

- Manhattan: 6.8 mph
- Orange County: 12.7 mph
- UDDS: 19 mph
- Idle time

The Agency will provide a percentage of each duty cycle that is representative of its service.

POWERPLANT

TS 9. Engine

The engine shall comply with applicable local, state and/or federal emissions and useful life requirements. The engine shall have a design life of not less than 300,000 miles without replacement or major service. The lifetime estimate is based on the design operating profile.

The engine shall be equipped with an electronically controlled management system, compatible with either 12 or 24 V power distribution. The engine control system shall be capable of transmitting and receiving electronic inputs and data from other drivetrain components and broadcasting that data to other vehicle systems. Communication between electronic drivetrain components and other vehicle systems shall be made using the communications networks. The engine's electronic management system shall monitor operating conditions and provide instantaneous adjustments to optimize both engine and bus performance. The system shall be programmable to allow optimization of programmable features.

The engine starting system shall be protected by an interlock that prevents its engagement when the engine is running. Special equipment or procedures may be employed to start the bus when exposed to temperatures less than 30 °F for a minimum of four hours without the engine in operation. All cold weather starting aids, engine heating devices and procedures shall be of the type recommended by the engine manufacturer and approved by the Agency. The integration of all systems on the vehicle relative to engine idle speed shall be the responsibility of the vehicle manufacturer to meet the requirements of the transit property.

The engine control system shall protect the engine against progressive damage. The system shall monitor conditions critical for safe operation and automatically derate power and/or speed and initiate engine shutdown as needed.

BASE

Automatic Engine Protection/Shutdown Override Feature

A control shall be available to the operator/driver that when constantly depressed and released will delay the engine shutdown or allow the bus to be moved. Override action shall be recorded. This data shall be retrievable by the Agency.

TS 9.1 Engine (CNG)

The engine shall meet all regulatory requirements when operating on fuel equal to CARB Specifications for Compressed Natural Gas #2292.5. The four predominant characteristics that must be met are methane, ethane, butane and propane.

TS 9.2 Propulsion System (Hybrid)

TS 9.2.1 Propulsion System Description

The bus shall be powered by a hybrid propulsion system. Function and operation of the bus shall be transparent to the bus operator and passengers. The OEM shall ensure that the bus structure can successfully accept the installation of the propulsion system and be operated on the stated duty-cycle for a period of 12 years without a structural failure. At a minimum, the propulsion system shall comply with applicable local, state and/or federal emissions and useful life requirements. The propulsion system shall comply with local, state and federal (maintenance) and other applicable sections.

The hybrid drive system shall be rated for the GVWR or greater of the bus.

TS 9.2.2 Propulsion System Service

The propulsion system shall be arranged so that accessibility for all routine maintenance is ensured. No special tools, other than dollies and hoists, shall be required to remove the propulsion system or any subsystems. However, the Agency shall recognize that properly rated test equipment and safe electrical work practices are essential when servicing high-voltage hybrid components. The exhaust system, air cleaner, air compressor, starter (if used), alternator, radiator, all engine accessories, and any other component requiring service or replacement shall be easily removable. The Contractor shall provide all specialty tools and diagnostic equipment required for maintaining the propulsion system in accordance with the Special Tools List.

TS 9.2.3 Primary Propulsion Unit and Traction Motor

The propulsion system may be configured in a variety of methods dependent upon type of drive, series and/or parallel. The definition of motor in the context of this specification assumes that the device can provide or consume energy as well as provide or retard mechanical motion.

TS 9.2.4 Energy Storage and Controller

Design and performance shall be provided to the Agency. Energy storage shall be of a commercial design capable of operating in the Agency transit environment. The primary charging of the energy storage system shall be accomplished by the on-board hybrid system controller and regenerative braking.

Thermal management will be provided to ensure optimal life and performance of the ESS over the environmental operating range.

TS 9.2.5 Hybrid System Controller (HSC)

The HSC regulates energy flow throughout hybrid system components in order to provide motive performance and accessory loads, as applicable, while maintaining critical system parameters (e.g., voltages, currents, temperatures, etc.) within specified operating ranges.

The controller shall monitor and process inputs and execute outputs as appropriate to control the operation of all propulsion system components.

Energy storage system SOC correction methods stated in SAE J2711 shall be utilized.

TS 9.2.6 Engine

The engine and related emission systems shall meet all applicable emissions and design/durability guidelines and standards.

The Contractor shall provide the Agency with expected durability of the engine and related emission systems.

NOTE: The Agency will provide desired fuel type.

BASE (DIESEL & HYBRID 26', 30', 35' & 40' BUSES)

Cummins ISL 2013 diesel, 280 horsepower with 900 LB FT torque. Uses SCR (Selective Catalytic Reduction) system to attain 2013 emissions standard or approved equal

OPTIONS (HYBRID OR CNG 26', 30', 35' & 40' BUSES)

BASE (DIESEL ARTICULATED BUSES)

OPTIONS (HYBRID OR CNG ARTICULATED BUSES)

Cummins ISL 2013 diesel (hybrid), 330 horsepower with 1050 LB FT torque (for E40EP, Allison system de-rates engine to 280HP) or approved equal. Uses SCR (Selective Catalytic Reduction) system to attain 2013 emissions standard.

The engine shall be equipped with an electronically controlled management system, compatible with multiplex wiring systems and either 12 or 24 V electrical systems.

The engine shall have on-board diagnostic capabilities, be able to monitor vital functions, store out-of-parameter conditions in memory and communicate faults and vital conditions to service personnel. Diagnostic reader device connector ports, suitably protected against dirt and moisture, shall be provided in the operator's area and near or inside the engine compartment. The on-board diagnostic system shall

inform the operator via visual and/or audible alarms when out-of-parameter conditions exist for vital engine functions.

The engine starting system shall be protected by an interlock that prevents its engagement when the engine is running. Special equipment or procedures may be employed to start the engine when exposed to temperatures less than 30 °F for a minimum of four hours without the engine in operation. All cold weather starting aids, engine heating devices and procedures shall be of the type recommended by the engine manufacturer and approved by the Agency.

BASE

Standard Requirements for a Fast Idle Device

The engine shall be equipped with an operator-controlled fast idle device. The fast idle control shall be a two-way switch mounted on the dash or side console and shall activate only with the transmission in neutral and the parking brake applied.

TS 10. Cooling Systems

The cooling systems shall be of sufficient size to maintain all engine and transmission fluids and engine intake air at safe, continuous operating temperatures during the most severe operations possible and in accordance with engine and transmission manufacturers' cooling system requirements. The cooling system fan controls should sense the temperatures of the operating fluids and the intake air, and if either is above safe operating conditions, the cooling fan should be engaged. The fan control system shall be designed with a fail-safe mode of "fan on." The cooling system shall meet the requirements stated in the operating environment.

TS 10.1 Engine Cooling

A means of determining satisfactory engine coolant level shall be provided. A spring-loaded, push-button type valve or lever shall be provided to safely release pressure or vacuum in the cooling system with both it and the water filler no more than ±60 in. above the ground. Both shall be accessible through the same access door.

The cooling fan shall be temperature controlled, allowing the engine to reach operating temperature quickly.

BASE

The radiator and charge air cooler shall be of durable, corrosion-resistant construction with non-removable tanks.

TS 10.1.1 Radiator Screen

BASE

No screen in front of radiator

TS 10.1.2 Coolant

BASE

Standard Requirement for Coolant Filtration

The engine cooling system shall be equipped with a properly sized water filter with a spin-on element and an automatic system for releasing supplemental coolant additives as needed to replenish and maintain protection properties. When replacing the water filter, only the water in the filter will be lost.

TS 10.1.3 Drive Design

BASE

Electric Fans

The bus shall be equipped with an electric fan drive bus cooling system. A screen guard must be installed on electric motor fans per SAE J1308.

TS 10.1.4 Mounting

BASE

The radiator shall be mounted on the rear street side of the bus.

TS 10.2 Charge Air Cooling

BASE

The charge air cooling system, also referred to as after-coolers or inter-coolers, shall provide maximum air intake temperature reduction with minimal pressure loss. The charge air radiator shall be sized and positioned to meet engine manufacturer's requirements. The charge air radiator shall not be stacked ahead of or behind the engine radiator and shall be positioned as close to the engine as possible unless integrated with the radiator. Air ducting and fittings shall be protected against heat sources and shall be configured to minimize restrictions and maintain sealing integrity.

TS 10.3 Transmission Cooling

The transmission shall be cooled by a dedicated heat exchanger sized to maintain operating fluid within the transmission manufacturer's recommended parameters of flow, pressure and temperature. The transmission cooling system shall be matched to the retarder and engine cooling systems to ensure that all operating fluids remain within recommended temperature limits established by each component manufacturer. The engine cooling system should provide coolant bypass flow to the transmission cooling system with the engine thermostats closed. Unless otherwise noted, the transmission cooler is to be the first component to see cold water from the radiator outlet. In addition, all return water piping, aside from the thermostat bypass line, is to be plumbed in after the transmission cooler.

TS 10.4 Hybrid Drive System Cooling

The thermal management system shall maintain hybrid system components within design operating temperature limits.

TS 11. Transmission (Conventional Powertrain)

The transmission shall be multiple speed, automatic shift with torque converter, retarder and electronic controls. Gross input power, gross input torque and rated input speed shall be compatible with the engine. The transmission shall be designed to operate for not less than 300,000 miles on the design operating profile without replacement or major service. The transmission should be easily removable without disturbing the engine and accessible for service.

The electronic controls shall be capable of transmitting and receiving electronic inputs and data from other drivetrain components and of broadcasting that data to other vehicle systems. Communication between electronic drivetrain components and other vehicle systems shall be made using the

communications networks. Electronic controls shall be compatible with either 12 or 24 V power distribution, provide consistent shift quality, and compensate for changing conditions, such as variations in vehicle weight and engine power. At a minimum, drivetrain components consisting of the engine, transmission, retarder, ASR, and anti-lock braking systems shall be powered by a dedicated and isolated ignition supply voltage to ensure data communication among components exists when the vehicle ignition is switched to the “on” position.

BASE

A nominal brake pedal application of 6 to 10 psi shall be required by the driver to engage forward or reverse range from the neutral position to prevent sudden acceleration of the bus from a parked position.

The electronically controlled transmission shall have on-board diagnostic capabilities, be able to monitor functions, store and time-stamp out-of-parameter conditions in memory, and communicate faults and vital conditions to service personnel. The transmission shall contain built-in protection software to guard against severe damage. The on-board diagnostic system shall trigger a visual alarm to the driver when the electronic control unit detects a malfunction.

An electronic transmission fluid level monitoring and protection system shall be provided.

BASE

No Automatic Neutral Function

The transmission shall not incorporate an automatic neutral shift function.

OPTIONS

TS 12. Retarder (Transit Coach)

The powertrain shall be equipped with a retarder designed to extend brake lining service life. The application of the retarder shall cause a smooth blending of both retarder and service brake function and shall not activate the brake lights

Actuation of ABS and/or automatic traction control (ATC) shall override the operation of the brake retarder.

BASE

Brake lights shall not illuminate when the retarder is activated.

OPTIONS

BASE

Standard Requirement for Retarder Activation

The retarder shall be adjustable within the limits of the powertrain and activated when the brake pedal is depressed. The Agency will work with the OEM/drive system manufacturer to determine retarder performance settings.

OPTIONS

BASE

Accessible Retarder Disable Switch

The retarder disable switch shall be accessible to the seated driver.

OPTIONS

TS 13. Mounting

All powerplant mounting shall be mechanically isolated to minimize transfer of vibration to the body structure and provide a minimum clearance of 0.75 in. Mounts shall control the movement of the powerplant so as not to affect performance of belt-driven accessories or cause strain in piping and wiring connections to the powerplant.

TS 13.1 Service

The propulsion system shall be arranged for ease of access and maintenance. The Contractor shall list all special tools, fixtures or facility requirements recommended for servicing. The muffler, exhaust system, air cleaner, air compressor, starter, alternator, radiator, all accessories and any other component requiring service or replacement shall be easily removable and independent of the engine and transmission removal. An engine oil pressure gauge and coolant temperature gauge shall be provided in the engine compartment. These gauges shall be easily read during service and mounted in an area where they shall not be damaged during minor or major repairs.

An air cleaner with a dry filter element and a graduated air filter restriction indicator shall be provided. The location of the air intake system shall be designed to minimize the entry of dust and debris and to maximize the life of the air filter. The engine air duct shall be designed to minimize the entry of water into the air intake system. Drainage provisions shall be included to allow any water/moisture to drain prior to entry into the air filter.

BASE

Engine oil and the radiator filler caps shall be hinged to the filler neck and closed with spring pressure or positive locks to prevent leakage. All fluid fill locations shall be properly labeled to help ensure that correct fluid is added. All fillers shall be easily accessible with standard funnels, pour spouts and automatic dispensing equipment. All lubricant sumps shall be fitted with magnetic-type drain plugs or magnets in pan.

OPTIONS

BASE

No engine bypass oil filter.

OPTIONS

BASE

Engine Oil Pressure and Coolant Temperature Display

Engine oil pressure and coolant temperature gauges required in engine compartment.

OPTIONS

TS 14. Hydraulic Systems

Hydraulic system service tasks shall be minimized and scheduled no more frequently than those of other major coach systems. All elements of the hydraulic system shall be easily accessible for service or unit replacement. Critical points in the hydraulic system shall be fitted with service ports so that portable diagnostic equipment may be connected or sensors for an off-board diagnostic system permanently attached to monitor system operation when applicable. A tamper-proof priority system shall prevent the loss of power steering during operation of the bus if other devices are also powered by the hydraulic system.

The hydraulic system shall operate within the allowable temperature range as specified by the lubricant manufacturer.

BASE

Hydraulic System Sensors

Sensors in the main hydraulic system, excluding those in the power steering system, shall indicate on the driver's on-board diagnostic panel conditions of low hydraulic fluid level.

TS 14.1 Fluid Lines

All lines shall be rigidly supported to prevent chafing damage, Fatigue Failures, degradation and tension strain. Lines should be sufficiently flexible to minimize mechanical loads on the components. Lines passing through a panel, frame or bulkhead shall be protected by grommets (or similar devices) that fit snugly to both the line and the perimeter of the hole that the line passes through to prevent chafing and wear. Pipes and fluid hoses shall not be bundled with or used to support electrical wire harnesses.

Lines shall be as short as practicable and shall be routed or shielded so that failure of a line shall not allow the contents to spray or drain onto any component operable above the auto-ignition temperature of the fluid.

All hoses, pipes, lines and fittings shall be specified and installed per the manufacturer's recommendations.

TS 14.2 Fittings and Clamps

All clamps shall maintain a constant tension at all times, expanding and contracting with the line in response to temperature changes and aging of the line material. The lines shall be designed for use in the environment where they are installed (for example, high-temperature resistant in the engine compartment, resistant to road salts near the road surface, and so on).

Compression fittings shall be standardized to prevent the intermixing of components. Compression fitting components from more than one manufacturer shall not be mixed, even if the components are known to be interchangeable.

TS 14.3 Charge Air Piping

Charge air piping and fittings shall be designed to minimize air restrictions and leaks. Piping shall be as short as possible, and the number of bends shall be minimized. Bend radii shall be maximized to meet the pressure drop and temperature rise requirements of the engine manufacturer. The cross section of all charge air piping shall not be less than the cross section of the intake manifold inlet. Any changes in pipe diameter shall be gradual to ensure a smooth passage of air and to minimize restrictions. Piping shall be routed away from heat sources as practicable and shielded as required to meet the temperature rise requirements of the engine manufacturer.

Charge air piping shall be constructed of stainless steel, aluminized steel, anodized aluminum or painted steel rated at minimum 1000 hours of salt spray according to ASTM B117, except between the air filter and turbocharger inlet, where piping may be constructed of flexible heat-resistant material. Connections between all charge air piping sections shall be sealed with a short section of reinforced hose and secured with stainless steel constant tension clamps that provide a complete 360 deg seal.

TS 15. Radiator

Radiator piping shall be stainless steel, Aluminum, brass tubing or painted steel rated at 1000 hours of salt spray according to ASTM B117 and where practicable, hoses shall be eliminated, including biodiesel. Necessary hoses shall be impervious to all bus fluids. All hoses shall be secured with stainless steel clamps that provide a complete 360 deg seal. The clamps shall maintain a constant tension at all times, expanding and contracting with the hose in response to temperature changes and aging of the hose material.

TS 16. Oil and Hydraulic Lines

Oil and hydraulic lines shall be compatible with the substances they carry. The lines shall be designed and intended for use in the environment where they are installed (for example, high-temperature resistant in the engine compartment, resistant to road salts near the road surface and so on). Lines within the engine compartment shall be composed of steel tubing where practicable, except in locations where flexible lines are required.

Hydraulic lines of the same size and with the same fittings as those on other piping systems of the bus, but not interchangeable, shall be tagged or marked for use on the hydraulic system only.

TS 17. Fuel

TS 17.1 Fuel Lines

Fuel lines shall be securely mounted, braced and supported as designed by the bus manufacturer to minimize vibration and chafing and shall be protected against damage, corrosion or breakage due to strain or wear.

Manifolds connecting fuel containers shall be designed and fabricated to minimize vibration and shall be installed in protected locations to prevent line or manifold damage from unsecured objects or road debris.

Fuel hose and hose connections, where permitted, shall be made from materials resistant to corrosion and fuel and protected from fretting and high heat. Fuel hoses shall be accessible for ease of serviceability.

BASE

Agency to specify fuel type.

TS 17.1.1 Fuel Lines, Diesel

Fuel lines shall be capable of carrying the type of fuel specified by the Agency (i.e., up to B20 type fuel).

TS 17.1.2 Fuel Lines, CNG

Fuel lines shall comply with NFPA-52. All tubing shall be a minimum of seamless Type 304 stainless steel (ASTM A269 or equivalent). Fuel lines and fittings shall not be fabricated from cast iron, galvanized pipe, aluminum, plastic or copper alloy with content exceeding 70 percent copper. Pipe fittings and hoses shall be clear and free from cuttings, burrs or scale. Pipe thread joining material that is impervious to CNG shall be utilized as required. Fuel lines shall be identifiable as fuel lines only.

High-pressure CNG lines shall be pressure tested to a minimum of 125 percent of system working pressure prior to fueling. CNG, nitrogen or clean, dry air shall be used to pressure-test the lines/assembly. The bus manufacturer shall have a documented procedure for testing the high-pressure line assembly.

Fuel lines shall be securely mounted, braced and supported using “split-block” type or stainless steel P clamps; all mounting clamps shall be mounted to a rigid structure to minimize vibration and shall be protected against damage, corrosion or breakage due to strain, rubbing or wear. “Floating clamps” (not mounted to a rigid structure) shall not be permitted. Fuel lines shall not be used to secure other components (wires, air lines, etc.).

Manifolds connecting fuel containers shall be designed and fabricated to minimize vibration and shall be installed in protected location(s) to prevent line or manifold damage from unsecured objects or road debris.

Fuel hose connections, where permitted, shall be less than 48 in. in length, made from materials resistant to corrosion and action of natural gas, and protected from fretting and high heat and shall be supported approximately every 12 in.

TS 17.2 Design and Construction

TS 17.2.1 Design and Construction, Diesel

Fuel Tank(s)

BASE

The fuel tank(s) shall be made of high-density cross-linked polyethylene plastic material with or without baffles.

OPTIONS

Installation

The fuel tank(s) shall be securely mounted to the bus to prevent movement during bus maneuvers.

The fuel tank(s) shall be equipped with an external, hex head, drain plug. It shall be at least a ⅜ in. size and shall be located at the lowest point of the tank(s). The fuel tank(s) shall have an inspection plate or

easily removable filler neck to permit cleaning and inspection of the tank(s) without removal from the bus. The tank(s) shall be baffled internally to prevent fuel-sloshing regardless of fill level. The baffles or fuel pickup location shall assure continuous full power operation on a 6 percent upgrade for 15 minutes starting with no more than 25 gal of fuel over the unusable amount in the tank(s).The bus shall operate at idle on a 6 percent downgrade for 30 minutes starting with no more than 10 gal of fuel over the unusable amount in the tank(s).

The materials used in mounting shall withstand the adverse effects of road salts, fuel oils and accumulation of ice and snow for the life of the bus.

Labeling

The capacity, date of manufacture, manufacturer name, location of manufacture, and certification of compliance to federal motor carrier safety regulations shall be permanently marked on the fuel tank(s).The markings shall be readily visible and shall not be covered with an undercoating material.

Fuel Filler

The fuel filler shall be located 7 to 32 ft behind the centerline of the front door on the curbside of the bus. The filler cap shall be retained to prevent loss and shall be recessed into the body so that spilled fuel will not run onto the outside surface of the bus.

The fuel lines forward of the engine bulkhead shall be in conformance to SAE Standards.

BASE

OEM to designate height of fuel filler.

BASE

Dry-Break Fuel Filler

The fuel filler shall accommodate a nozzle that forms a locked and sealed connection during the refueling process to eliminate spills. Fuel shall not be allowed to flow into the tank unless the nozzle has been properly coupled, locked and sealed to the filler. With the nozzle open, fuel shall enter the tank at a fill rate of not less than 40 gal per minute of foam-free fuel without causing the nozzle to shut off before the tank is full. The nozzle shall automatically shut off when the tank is essentially full. Once disconnected, fuel shall not be allowed to flow through the nozzle at any time. Any pressure over 3 psi shall be relieved from the fuel tank automatically. An audible signal shall indicate when the tank is essentially full. The dry break system shall be compatible with the Agency’s system. The fuel filler cap shall be hinged.

OPTIONS

TS 17.2.2 Design and Construction, CNG

Fuel Containers/Cylinders

CNG fuel containers/cylinders must be designed, constructed, manufactured and tested in accordance with at least one of the following:

- NFPA 52-Standard for Compressed Natural Gas (CNG) Vehicular Fuel Systems
- FMVSS 304
- Any local standard(s) specifically intended for CNG fuel containers

The design and construction of the fuel system supplied by the OEM shall comply with federal and local regulations.

Installation

Fuel cylinders shall be installed in accordance with ANSI/IAS NGV2 - 1998, “Basic Requirements for Compressed Natural Gas Vehicles (NGV) Fuel Containers” and NFPA 52, “Compressed Natural Gas (CNG) Vehicular Fuel Systems Code,” 1998 edition, Section 303. In the case of a low-floor transit bus, the placement of tanks shall be limited to the roof of the vehicle or in the compartment above the engine of the vehicle.

Fuel cylinders, attached valves, pressure relief devices, and mounting brackets should be installed and protected so that their operation is not affected by bus washers and environmental agents such as rain, snow, ice or mud. These components should be protected from significant damage caused by road debris or collision.

The roof and area above the engine mounted tanks shall be contained within a skeletal structure resembling a roll cage and contained within an enclosure. The enclosure shall incorporate a hinged clamshell type access. The access panels shall be designed to offer protection from weather and to be sacrificial as a means of providing an escape path to atmosphere upon rapid enclosure pressure rise. The latching method shall utilize quick-release captive hardware that can be demonstrated to last the life of the bus. Additional shielding shall be provided surrounding end fittings and valves as needed. Shields shall be attached to the bus structure hinged in a manner that permits one mechanic to unlatch and swing the shield open for routine inspections. As practical, electrical components shall not be located within the roof enclosure, and if unavoidable, they shall be intrinsically safe.

CNG fueled buses shall be equipped with an active automatic gas detection system, which shall annunciate unsafe levels of methane. The automatic gas detection system shall be integrated with an onboard fire suppression system.

BASE

The access panels shall not be interlocked.

OPTIONS

Labeling

CNG fuel systems shall be labeled in accordance with NFPA 52, “Compressed Natural Gas (CNG) Vehicular Fuel Systems Code,” 1998 edition.

Pressure Relief Devices (PRDs)

PRDs must be designed, constructed, manufactured and tested in accordance with ANIS/IAS PRD1 - 1998, “Pressure Relief Devices for Natural Gas Vehicle (NGV) Fuel Containers” and ANSI/IAS NGV2- 1998, “Basic Requirements for Compressed Natural Gas Vehicle (NGV) Fuel Containers.” All natural gas fuel system piping, including the PRD vent line, shall be stainless steel. All PRDs must be vented to outside.

Valves

Valves must be installed in accordance with ANIS/IAS NGV2 - 1998, “Basic Requirements for Compressed Natural Gas Vehicle (NGV) Fuel Containers” and NFPA 52, “Standard for Compressed Natural Gas (CNG) Vehicular Fuel Systems.”

Fuel Filler

The fuel filler shall be located 7 to 38 ft (on a 30, 35 and 40 ft coach) behind the centerline of the front door on a side determined by the Agency. The filler cap shall be retained to prevent loss and shall be recessed into the body.

The fill and vent receptacles shall be located within an enclosure on the right side of the bus. The access door shall be sized to allow full viewing of gauges, ease of hookups and maneuver of fuel nozzle.

The fuel fill receptacle and vent receptacle attachment shall be robust and capable of routine fueling connects/disconnects without deflection or metal fatigue, and capable of withstanding mechanical loads induced by a fueling drive-away incident without attachment failure.

BASE

No static ground plug shall be installed.

OPTIONS

Fueling System

The CNG fueling port receptacle shall be an ANSI/AGA NGV1 or NGV2 certified receptacle as designated by the Agency. The coach shall be capable of being fueled by a nozzle determined by the Agency. The fueling port receptacle location shall be such that connection by fueling personnel can be performed without physical strain or interference. A dust cap shall be permanently “tethered” to the fueling port receptacle. The fueling port receptacle access door shall be equipped with an interlock sensor that disables the engine starting system when the access door is open, to prevent drive-aways. The interlock shall be of the type such that if the sensor fails, the coach will not start.

Fueling site characteristics such as pressure, flow rate and temperature shall be provided by the Agency.

Defueling System

The CNG defueling port shall be an NGV-3.1/CGA-12.3 certified receptacle. The CNG defueling port shall be located on the curbside of the coach, in a location that is compatible with the Agency’s defueling station operation. The defueling system shall incorporate the following characteristics:

- Dust cap permanently “tethered” to the defueling port.
- Device(s) to prevent inadvertent defueling. Specifications to be provided by Agency.
- Components compatible with Agency’s defueling operation.
- The piping and fittings onboard the bus shall be sized to allow the fueling station to meet the following operating parameters:

BASE

Fuel system shall be sized to allow a bus with 20,000 scf on board to defuel within 2.5 hours.

OPTIONS

TS 18. Emissions and Exhaust

TS 18.1 Exhaust Emissions

The engine and related systems shall meet all applicable emission and engine design guidelines and standards.

TS 18.2 Exhaust System

The exhaust pipe shall be of sufficient height to prevent exhaust gases and waste heat from discoloring or causing heat deformation to the bus. The entire exhaust system shall be adequately shielded to prevent heat damage to any bus component, including the exhaust aftertreatment compartment area. The exhaust outlet shall be designed to minimize rain, snow or water generated from high-pressure washing systems from entering into the exhaust pipe and causing damage to the aftertreatment.

BASE

Exhaust gases and waste heat shall be discharged from the roadside rear corner of the roof.

TS 18.3 Exhaust Aftertreatment

An exhaust aftertreatment system will be provided to ensure compliance to all applicable EPA regulations in effect.

Diesel Exhaust Fluid Injection

If required by the engine manufacturer to meet NOx level requirements specified by EPA, a DEF injection system will be provided. The DEF system will minimally include a tank, an injector, a pump, an ECM and a selective catalytic converter. The tanks shall be designed to store DEF in the operating environment described in the “Operating Environment” section.

BASE

The DEF filler shall accommodate a standard nozzle. The nozzle shall automatically shut off when the tank is essentially full. The DEF filler cap shall be a screw-on cap and located curbside.

OPTIONS

BASE

The DEF fluid lines shall be designed to prevent the DEF from freezing. The DEF injection system shall not be damaged from a cold soak at 10 °F.

TS 18.4 Particulate Aftertreatment

If required by the engine manufacturer to meet particulate level requirements specified by EPA, a particulate trap will be provided. The particulate trap shall regenerate itself automatically if it senses clogging. Regeneration cycles and conditions will be defined by the engine manufacturer.

STRUCTURE

TS 19. General

TS 19.1 Design

The structure of the bus shall be designed to withstand the transit service conditions typical of an urban or intercity duty cycle throughout its service life. The vehicle structural frame shall be designed to operate

with minimal maintenance throughout the 12-year design operating profile. The design operating profile specified by the Agency shall be considered for this purpose.

TS 20. Altoona Testing

Prior to acceptance of first bus, the vehicle must have completed any FTA-required Altoona testing. Any items that required repeated repairs or replacement must undergo the corrective action with supporting test and analysis. A report clearly describing and explaining the failures and corrective actions taken to ensure that any and all such failures will not occur shall be submitted to the Agency.

BASE

If available, the Altoona Test Report shall be provided to the Agency with the Proposal submittal. If not available, then the report shall be provided prior to first acceptance of bus.

OPTION

Altoona Test Report Provided to Agency Prior to Start of Bus Production

Prior to the start of any bus manufacturing or assembly processes, the structure of the proposed bus model shall have undergone appropriate structural testing and/or analysis, including the complete regimen of FTA-required Altoona tests. Prior to assembly of the first bus, the OEM shall provide the Agency with a completed report of Altoona testing for the proposed bus model, along with a plan of corrective action to address deficiencies, breakdowns and other issues identified during Altoona testing. The bus model tested shall match the bus model proposed for procurement, including structure, axles and drivetrain. Base model and partial Altoona test reports are acceptable when the combination of these tests adequately represents the proposed bus model.

TS 20.1 Structural Validation

BASE

Baseline Structural Analysis

The structure of the bus shall have undergone appropriate structural testing and/or analysis. At minimum, appropriate structural testing and analysis shall include Altoona testing or finite element analysis (FEA).

TS 21. Distortion

The bus, loaded to GVWR and under static conditions, shall not exhibit deflection or deformation that impairs the operation of the steering mechanism, doors, windows, passenger escape mechanisms or service doors. Static conditions shall include the vehicle at rest with any one wheel or dual set of wheels on a 6 in. curb or in a 6 in. deep hole.

TS 22. Resonance and Vibration

All structure, body and panel-bending mode frequencies, including vertical, lateral and torsional modes, shall be sufficiently removed from all primary excitation frequencies to minimize audible, visible or sensible resonant vibrations during normal service.

TS 22.1 Engine Compartment Bulkheads

The passenger and engine compartment shall be separated by fire-resistant bulkheads. The engine compartment shall include areas where the engine and exhaust system are housed. This bulkhead shall preclude or retard propagation of an engine compartment fire into the passenger compartment and shall be

in accordance with the Recommended Fire Safety Practices defined in FTA Docket 90A, dated October 20, 1993. Only necessary openings shall be allowed in the bulkhead, and these shall be fire-resistant. Any passageways for the climate control system air shall be separated from the engine compartment by fire-resistant material. Piping through the bulkhead shall have fire-resistant fittings sealed at the bulkhead. Wiring may pass through the bulkhead only if connectors or other means are provided to prevent or retard fire propagation through the bulkhead. Engine access panels in the bulkhead shall be fabricated of fire-resistant material and secured with fire-resistant fasteners. These panels, their fasteners and the bulkhead shall be constructed and reinforced to minimize warping of the panels during a fire that will compromise the integrity of the bulkhead.

TS 22.2 Crashworthiness (Transit Coach)

The bus body and roof structure shall withstand a static load equal to 150 percent of the curb weight evenly distributed on the roof with no more than a 6 in. reduction in any interior dimension. Windows shall remain in place and shall not open under such a load. These requirements must be met without the roof-mounted equipment installed.

The bus shall withstand a 25 mph impact by a 4000 lb automobile at any side, excluding doorways, along either side of the bus and the articulated joint, if applicable, with no more than 3 in. of permanent structural deformation at seated passenger hip height. This impact shall not result in sharp edges or protrusions in the bus interior.

Exterior panels below 35 in. from ground level shall withstand a static load of 2000 lbs applied perpendicular to the bus by a pad no larger than 5 sq in. This load shall not result in deformation that prevents installation of new exterior panels to restore the original appearance of the bus.

TS 23. Corrosion

The bus flooring, sides, roof, understructure and axle suspension components shall be designed to resist corrosion or deterioration from atmospheric conditions and de-icing materials for a period of 12 years or 500,000 miles, whichever comes first. It shall maintain structural integrity and nearly maintain original appearance throughout its service life, with the Agency’s use of proper cleaning and neutralizing agents.

All materials that are not inherently corrosion resistant shall be protected with corrosion-resistant coatings. All joints and connections of dissimilar metals shall be corrosion resistant and shall be protected from galvanic corrosion. Representative samples of all materials and connections shall withstand a two-week (336-hour) salt spray test in accordance with ASTM Procedure B-117 with no structural detrimental effects to normally visible surfaces and no weight loss of over 1 percent.

BASE

Corrosion-Resistance Requirements

All exposed surfaces and the interior surfaces of tubing and other enclosed members below the lower window line shall be corrosion resistant through application of a corrosion protection system.

OPTIONS

TS 24. Towing

Each towing device shall withstand, without permanent deformation, tension loads up to 1.2 times the curb weight of the bus within 20 deg of the longitudinal axis of the bus. If applicable, the rear towing device(s) shall not provide a toehold for unauthorized riders. The method of attaching the towing device

shall not require the removal, or disconnection, of front suspension or steering components. Removal of the bike rack is permitted for attachment of towing devices.

BASE

Shop air connectors shall be provided at the front and rear of the bus and shall be capable of supplying all pneumatic systems of the bus with externally sourced compressed air. The location of these shop air connectors shall facilitate towing operations.

BASE

No Provision of Glad-Hand Type Connectors for Towing

No glad-hand type connector shall be provided.

BASE

Lifted (Supported) Front Axle and Flat Towing Capability

The front towing devices shall allow attachment of adapters for a rigid tow bar and shall permit the lifting of the bus until the front wheels are clear off the ground in order to position the bus on the towing equipment by the front wheels. These devices shall also permit common flat towing.

OPTIONS

Two rear recovery devices/tie downs shall permit lifting and towing of the bus for a short distance, such as in cases of an emergency, to allow access to provisions for front towing of bus. The method of attaching the tow bar or adapter shall require the specific approval of the Agency. Any tow bar or adapter exceeding 50 lbs should have means to maneuver or allow for ease of use and application. Each towing device shall accommodate a crane hook with a 1 in. throat.

TS 25. Jacking

It shall be possible to safely jack up the bus, at curb weight, with a common 10-ton floor jack with or without special adapter, when a tire or dual set is completely flat and the bus is on a level, hard surface, without crawling under any portion of the bus. Jacking from a single point shall permit raising the bus sufficiently high to remove and reinstall a wheel and tire assembly. Jacking pads located on the axle or suspension near the wheels shall permit easy and safe jacking with the flat tire or dual set on a 6 in. high run-up block not wider than a single tire. The bus shall withstand such jacking at any one or any combination of wheel locations without permanent deformation or damage.

BASE

Yellow Pads

Jacking pads shall be painted safety yellow.

TS 26. Hoisting

The bus axles or jacking plates shall accommodate the lifting pads of a two-post (or three-post if 60 ft articulated bus) hoist system. Jacking plates, if used as hoisting pads, shall be designed to prevent the bus from falling off the hoist. Other pads or the bus structure shall support the bus on jack stands independent of the hoist.

The vehicle shall be capable of lifting by the wheels, and, as necessary to meet tire load requirements, the proper number for wheel lifts and/or adapters must be used.

TS 27. Floor

TS 27.1 Design (Transit Coach)

The floor shall be essentially a continuous plane, except at the wheel housings and platforms. Where the floor meets the walls of the bus, as well as other vertical surfaces such as platform risers, the surface edges shall be blended with a circular section of radius not less than ¼ in. or installed in a fully sealed butt joint. Similarly, a molding or cover shall prevent debris accumulation between the floor and wheel housings. The vehicle floor in the area of the entrance and exit doors shall have a lateral slope not exceeding 2 deg to allow for drainage.

BASE

Bi-Level Floor Design

The floor design shall consist of two levels (bi-level construction). Aft of the rear door extending to the rear settee riser, the floor height may be raised to a height no more than 21 in. above the lower level, with equally spaced steps. An increase slope shall be allowed on the upper level, not to exceed 3.5 deg off the horizontal.

OPTIONS

TS 27.2 Design (Articulated Transit Coach)

The floor shall be essentially a continuous plane, except at the wheel housings and platforms. Where the floor meets the walls of the bus, as well as other vertical surfaces such as platform risers, the surface edges shall be blended with a circular section of radius not less than ¼ in. or installed in a fully sealed butt joint. Similarly, a molding or cover shall prevent debris accumulation between the floor and wheel housings. The vehicle floor in the area of the entrance and exit doors shall have a lateral slope not exceeding 2 deg. to allow for drainage.

BASE

Bi-Level Floor Design

The floor design shall consist of two levels (bi-level construction). Aft of the rear door extending to the rear settee riser, the floor height may be raised to a height no more than 21 in. above the lower level, with equally spaced steps. An increase slope shall be allowed on the upper level, not to exceed 3.5 deg off the horizontal.

OPTIONS

TS 27.3 Strength

The floor deck may be integral with the basic structure or mounted on the structure securely to prevent chafing or horizontal movement and designed to last the life of the bus. Sheet metal screws shall not be used to retain the floor, and all floor fasteners shall be serviceable from one side only. Any adhesives, bolts or screws used to secure the floor to the structure shall last and remain effective throughout the life of the coach. Tapping plates, if used for the floor fasteners, shall be no less than the same thickness as a

standard nut, and all floor fasteners shall be secured and protected from corrosion for the service life of the bus.

The floor deck shall be reinforced as needed to support passenger loads. At GVWR, the floor shall have an elastic deflection of no more than 0.60 in. from the normal plane. The floor shall withstand the application of 2.5 times gross load weight without permanent detrimental deformation. The floor, with coverings applied, shall withstand a static load of at least 150 lbs applied through the flat end of a ½ in. diameter rod, with 1/32 in. radius, without permanent visible deformation.

TS 27.4 Construction

The floor shall consist of the subfloor and the floor covering that will last the life of the bus. The floor as assembled, including the sealer, attachments and covering, shall be waterproof, non-hygroscopic and resistant to mold growth. The subfloor shall be resistant to the effects of moisture, including decay (dry rot).It shall be impervious to wood-destroying insects such as termites.

BASE

Pressure-Preserved Plywood Panel

Plywood shall be certified at the time of manufacturing by an industry-approved third-party inspection agency such as APA – The Engineered Wood Association (formerly the American Plywood Association).Plywood shall be of a thickness adequate to support design loads, manufactured with exterior glue, satisfy the requirements of a Group I Western panel as defined in PS 1-95 (Voluntary Product Standard PS 1-95, “Construction and Industrial Plywood”) and be of a grade that is manufactured with a solid face and back. Plywood shall be installed with the highest-grade, veneer side up. Plywood shall be pressure-treated with a preservative chemical and process such as alkaline copper quaternary (ACQ) that prevents decay and damage by insects. Preservative treatments shall utilize no EPA-listed hazardous chemicals. The concentration of preservative chemicals shall be equal to or greater than required for an above ground level application. Treated plywood will be certified for preservative penetration and retention by a third-party inspection agency. Pressure-preservative treated plywood shall have a moisture content at or below 15 percent.

TS 28. Platforms

TS 28.1 Driver’s Area

The covering of platform surfaces and risers, except where otherwise indicated, shall be the same material as specified for floor covering. Trim shall be provided along top edges of platforms unless integral nosing is provided.

BASE

Stainless steel trim material.

TS 28.2 Driver’s Platform

The driver’s platform shall be of a height such that, in a seated position, the driver can see an object located at an elevation of 42 in. above the road surface, 24 in. from the leading edge of the bumper. Notwithstanding this requirement, the platform height shall not position the driver such that the driver’s vertical upward view is less than 15 deg. A warning decal or sign shall be provided to alert the driver to the change in floor level. **Figure 2** illustrates a means by which the platform height can be determined, using the critical line of sight.

FIGURE 2
Determining Platform Height

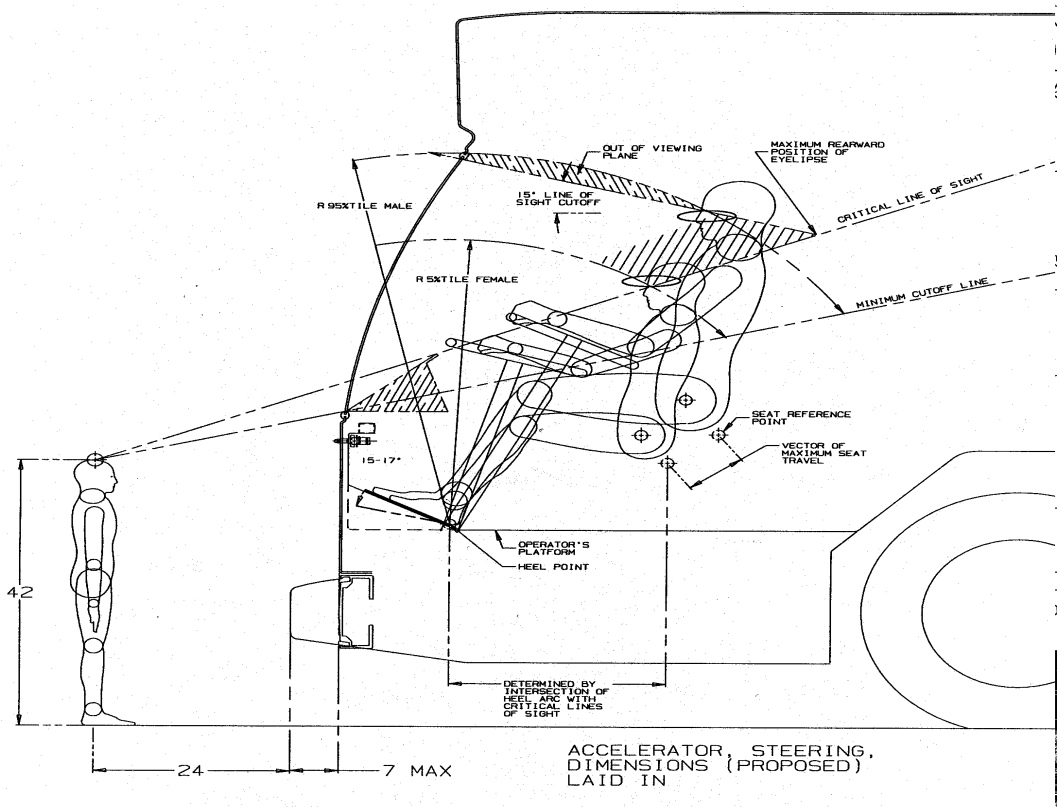

TS 28.3 Farebox

Farebox placement should minimize impact to passenger access and minimize interference with the driver's line of sight.

BASE

Driver Interface Required; Platform Needed to Bring Height to Driver Access

If the driver's platform is higher than 12 in., then the farebox is to be mounted on a platform of suitable height to provide accessibility for the driver without compromising passengers' access.

OPTIONS

No interface, no platform.

BASE

Stanchions

Stanchions shall be located around the farebox.

TS 28.4 Rear Step Area to Rear Area (Transit Coach)

If the vehicle is of a bi-level floor design, then a rear step area shall be provided along the center aisle of the bus to facilitate passenger traffic between the upper and lower floor levels. This step area shall be cut into the rear platform and shall be approximately the aisle width, a minimum 12 in. deep and

approximately half the height of the upper level relative to the lower level. The horizontal surface of this platform shall be covered with skid-resistant material with a visually contrasting nosing and shall be sloped slightly for drainage. A warning decal or sign shall be provided at the immediate platform area to alert passengers to the change in floor level.

TS 29. Wheel Housing

TS 29.1 Design and Construction

Sufficient clearance and air circulation shall be provided around the tires, wheels and brakes to preclude overheating when the bus is operating on the design operating profile. Wheel housings shall be constructed of corrosion-resistant and fire-resistant material.

Wheel housings, as installed and trimmed, shall withstand impacts of a 2 in. steel ball with at least 200 ft-lbs of energy without penetration.

TS 29.2 Design and Construction (Transit Coach)

Interference between the tires and any portion of the bus shall not be possible in maneuvers up to the limit of tire adhesion with weights from curb weight to GVWR. Wheel housings shall be adequately reinforced where seat pedestals are installed. Wheel housings shall have sufficient sound insulation to minimize tire and road noise and meet all noise requirements of this specification.

Design and construction of front wheel housings shall allow for the installation of a radio or electronic equipment storage compartment on the interior top surface, or its use as a luggage rack.

The finish of the front wheel housings shall be scratch-resistant and complement interior finishes of the bus to minimize the visual impact of the wheel housing. If fiberglass wheel housings are provided, then they shall be color-impregnated to match interior finishes. The lower portion extending to approximately 10 to 12 in. above the floor shall be equipped with scuff-resistant coating or stainless steel trim.

Wheel housings not equipped with seats or equipment enclosure shall have a horizontal assist mounted on the top portion of the housing no more than 4 in. higher than the wheel well housing.

BASE

No provision shall be made to chain buses.

TS 29.3 Articulated Joint (Articulated Transit Coach)

60 ft articulated buses shall be equipped with a turntable that permanently joins the lead unit and trailing unit sections, allows relative motion between the sections about the pitch and yaw axes, and allows a small amount of relative roll between the sections without damage. A rotating turntable connection shall be provided between the lead unit and trailing unit to serve as a floor and to allow passenger access between the sections of the bus under all operating conditions. The turntable design shall provide for all horizontal and vertical turns that the bus is capable of making without introducing discontinuities between the turntable and adjacent vehicle floors.

The structures and finishes in the interconnecting section shall be designed to prevent passenger injury under all conditions. The turntable floor cover plate shall be supported so that there will be no honing of the floor plate, making it sharp at the outer edge. The gap between the floor and the turntable shall be minimized in order to prevent a tripping hazard. It shall be designed for ease of access for inspection and repairs of all devices that are part of it or devices that pass through the turntable area. Under-floor

turntable components shall be easily accessible. Floor plates must be easily lifted and secured in the open position by one person for inspection and repairs. Turntable seats shall be quickly and easily removable by one person. The under-floor turntable area shall be completely enclosed by the bellows and bulkheads on the lead and trailing units to prevent drafts into the passenger compartment. The area between the turntable floor and the bellows shall be closed to prevent collection of trash in the bottom of the bellows. Closeouts shall be attached with removable fasteners. An access hatch shall be provided for routine maintenance (i.e., greasing, adjusting potentiometer, maintenance items).

An anti-jackknife joint shall be provided. This joint—by sensing vehicle speed, relative angle between the lead and trailing sections, throttle and braking actions, and any other necessary inputs—will control the degree of stiffness in the joint to ensure that the bus does not jackknife or operate in a dangerous or unsafe condition. The Agency shall approve the anti-jackknife joint. The interconnecting structure shall be designed to prevent separation of the lead and trailing units as a result of a road accident with a commercial or private vehicle. A means shall be provided so that the driver can override the control or recover from the situation. The bus shall be equipped with a reverse speed governor that shall apply the brake and accelerator interlocks when the bus speed in reverse gear exceeds 1.5 mph, but the bus shall have sufficient power in reverse to back out of wheel locator depressions at a floor hoist. The proposed configuration of these devices and the reverse-speed requirements shall be submitted for approval of the Agency.

Easy access shall be provided to overhead lines (electric, air, hydraulic, refrigerant) passing through the turntable. Hydraulic fittings shall be suitable for the given application and must be compatible with other fittings throughout the vehicle.

In order to prevent damage to the structure and electrical, air, hydraulic and refrigerant lines when the vertical or horizontal bending capabilities of the hinge are exceeded, the bus shall be provided with appropriate warning devices, brake interlocks and positive mechanical stops. These devices shall operate when the maximum bend angle is being approached in either plane.

TS 29.4 Raceway (Articulated Transit Coach)

A raceway shall be provided through the turntable area to accommodate to maximum deflection of the turntable. The raceway shall prevent chafing, binding, rubbing, crimping or leakage of all hydraulic, air, fuel and system support lines, as well as all electrical and electronic cabling through or to the turntable area. Lines shall be secured, separated and labeled at the lead and trailing unit bulkheads. Separation shall be maintained on the flexible portion of all lines through the use of a raceway. All electrical terminations and hose fittings shall be easily visible and easily tightened or removed without removing any other component. Lines, routing, securement and labeling shall be approved by the Agency.

Bulkhead fitting shall be provided for all lines: air coolant, electrical and AC at both ends of the raceway. The bulkhead area shall be easily accessible for servicing.

TS 29.5 Bellows

Replacement fabric type bellows with draft-free, no-sag bottom closure and water drains shall be provided between the lead and trailing sections to seal the bus interior and keep it free of water, dirt and drafts. Bellows hardware shall be corrosion resistant, and the under-floor area of the bellows shall be easy to clean when necessary. The passageway between the lead unit and trailing unit shall have an inside cross section that is as nearly equal as possible to the inside cross section of the bus bodies, with no tripping or pinching hazards created by the turntable cross section or closeouts. The bellows shall be durable, and its supporting structure and stiffeners shall support the bellows material in a neat, sag-free manner. The Contractor shall supply information on the actual service life achieved by the type of

bellows being proposed. A sample of the bellows and attaching hardware may be requested for evaluation at the Agency's option. Bellows shall be approved by the Agency.

BASE

No bellows liner required.

OPTIONS

CHASSIS

TS 30. Suspension

TS 30.1 General Requirements

The front, rear and mid (if articulated) suspensions shall be pneumatic type. The basic suspension system shall last the service life of the bus without major overhaul or replacement. Adjustment points shall be minimized and shall not be subject to a loss of adjustment in service. Routine adjustments shall be easily accomplished by limiting the removal or disconnecting the components.

TS 30.2 Alignment

All axles should be properly aligned so the vehicle tracks accurately within the size and geometry of the vehicle.

TS 30.3 Springs and Shock Absorbers

TS 30.3.1 Suspension Travel

The suspension system shall permit a minimum wheel travel of 2.75 in. jounce-upward travel of a wheel when the bus hits a bump (higher than street surface), and 2.75 in. rebound-downward travel when the bus comes off a bump and the wheels fall relative to the body. Elastomeric bumpers shall be provided at the limit of jounce travel. Rebound travel may be limited by elastomeric bumpers or hydraulically within the shock absorbers. Suspensions shall incorporate appropriate devices for automatic height control so that regardless of load the bus height relative to the centerline of the wheels does not change more than ½ in. at any point from the height required. The safe operation of a bus cannot be impacted by ride height up to 1 in. from design normal ride height.

TS 30.3.2 Damping

Vertical damping of the suspension system shall be accomplished by hydraulic shock absorbers mounted to the suspension arms or axles and attached to an appropriate location on the chassis. Damping shall be sufficient to control coach motion to three cycles or less after hitting road perturbations. The shock absorber bushing shall be made of elastomeric material that will last the life of the shock absorber. The damper shall incorporate a secondary hydraulic rebound stop.

TS 30.3.3 Lubrication

BASE

Standard Grease Fittings

All elements of steering, suspension and drive systems requiring scheduled lubrication shall be provided with grease fittings conforming to SAE Standard J534. These fittings shall be located for ease of inspection and shall be accessible with a standard grease gun from a pit or with the bus on a hoist. Each element requiring lubrication shall have its own grease fitting with a relief path. The lubricant specified

shall be standard for all elements on the bus serviced by standard fittings and shall be required no less than every 6000 miles.

OPTIONS

TS 30.3.4 Kneeling

BASE

A kneeling system shall lower the entrance(s) of the bus a minimum of 2 in. during loading or unloading operations regardless of load up to GVWR, measured at the longitudinal centerline of the entrance door(s) by the driver. The kneeling control shall provide the following functions:

- Downward control must be held to allow downward kneeling movement.
- Release of the control during downward movement must completely stop the lowering motion and hold the height of the bus at that position.
- Upward control actuation must allow the bus to return to normal floor height without the driver having to hold the control.

The brake and throttle interlock shall prevent movement when the bus is kneeled. The kneeling control shall be disabled when the bus is in motion. The bus shall kneel at a maximum rate of 1.25 in. per second at essentially a constant rate. After kneeling, the bus shall rise within 4 seconds to a height permitting the bus to resume service and shall rise to the correct operating height within 7 seconds regardless of load up to GVWR. During the lowering and raising operation, the maximum vertical acceleration shall not exceed 0.2 g, and the jerk shall not exceed 0.3 g/second.

An indicator visible to the driver shall be illuminated until the bus is raised to a height adequate for safe street travel. An audible warning alarm will sound simultaneously with the operation of the kneeler to alert passengers and bystanders. A warning light mounted near the curbside of the front door, a minimum 2.5 in. diameter amber lens, shall be provided that will blink when the kneel feature is activated. Kneeling shall not be operational while the wheelchair ramp is deployed or in operation.

BASE

Full front right-side kneeling.

TS 31. Wheels and Tires

TS 31.1 Wheels

All wheels shall be interchangeable except for the middle axle of an artic where a super single tire size is used and shall be removable without a puller. Wheels shall be compatible with tires in size and load-carrying capacity. Front wheels and tires shall be balanced as an assembly per SAE J1986.

BASE

Painted Steel

Wheels and rims shall be hub-piloted with powder-coated steel (maximum 3.5 mil) and shall resist rim flange wear.

OPTIONS

BASE

No tire-pressure monitoring system.

BASE

Standard non-locking lug nut.

TS 31.2 Tires

Tires shall be suitable for the conditions of transit service and sustained operation at the maximum speed capability of the bus. Load on any tire at GVWR shall not exceed the tire supplier's rating.

Sufficient space shall be provided to allow the Agency to carry a spare tire, if required.

BASE

The tires shall be provided by the bus manufacturer.

OPTIONS

TS 32. Steering

BASE

Hydraulically assisted steering shall be provided. The steering gear shall be an integral type with the number and length of flexible lines minimized or eliminated. Engine-driven hydraulic pump shall be provided for power steering.

TS 32.1 Steering Axle (Transit Coach)

BASE

Solid Beam Axle with "Unitized" lubricated for life wheel bearings and seals

The front axle shall be solid beam, non-driving with a load rating sufficient for the bus loaded to GVWR and shall be equipped with "Unitized" lubricated for life type front wheel bearings and seals.

All friction points on the front axle shall be equipped with replaceable bushings or inserts and, if needed, lubrication fittings easily accessible from a pit or hoist.

The steering geometry of the outside (frontlock) wheel shall be within 2 deg of true Ackerman up to 50 percent lock measured at the inside (backlock) wheel. The steering geometry shall be within 3 deg of true Ackerman for the remaining 100 percent lock measured at the inside (backlock) wheel.

TS 32.2 Steering Wheel

TS 32.2.1 Turning Effort

Steering effort shall be measured with the bus at GVWR, stopped with the brakes released and the engine at normal idling speed on clean, dry, level, commercial asphalt pavement and the tires inflated to recommended pressure.

Under these conditions, the torque required to turn the steering wheel 10 deg shall be no less than 5 ft-lbs and no more than 10 ft-lbs. Steering torque may increase to 70 ft-lbs when the wheels are approaching the steering stops, as the relief valve activates.

Power steering failure shall not result in loss of steering control. With the bus in operation, the steering effort shall not exceed 55 lbs at the steering wheel rim, and perceived free play in the steering system shall not materially increase as a result of power assist failure. Gearing shall require no more than seven turns of the steering wheel lock-to-lock.

Caster angle shall be selected to provide a tendency for the return of the front wheels to the straight position with minimal assistance from the driver.

TS 32.2.2 Steering Wheel, General

The steering wheel diameter shall be approximately 18 to 20 in.; the rim diameter shall be ⅞ to 1¼ in. and shaped for firm grip with comfort for long periods of time.

Steering wheel spokes and wheel thickness shall ensure visibility of the dashboard so that vital instrumentation is clearly visible at center neutral position (within the range of a 95th-percentile male, as described in SAE 1050a, Sections 4.2.2 and 4.2.3). Placement of steering column must be as far forward as possible, but either in line with or behind the instrument cluster.

TS 32.2.3 Steering Column Tilt

The steering column shall have full tilt capability with an adjustment range of no less than 40 deg from the vertical and easily adjustable by the driver and shall be accessible by a 5th percentile female and 95th percentile male.

TS 32.2.4 Steering Wheel Telescopic Adjustment

The steering wheel shall have full telescoping capability and have a minimum telescopic range of 2 in. and a minimum low-end adjustment of 29 in., measured from the top of the steering wheel rim in the horizontal position to the cab floor at the heel point.

TABLE 4

Steering Wheel Height[1] Relative to Angle of Slope

At Minimum Telescopic Height Adjustment (29 in.)		At Maximum Telescopic Height Adjustment (5 in.)	
Angle of Slope	**Height**	**Angle of Slope**	**Height**
0 deg	29 in.	0 deg	34 in.
15 deg	26.2 in.	15 deg	31.2 in.
25 deg	24.6 in.	25 deg	29.6 in.
35 deg	22.5 in.	35 deg	27.5 in.

1. Measured from bottom portion closest to driver.

TS 33. Drive Axle

The bus shall be driven by a heavy-duty axle with a load rating sufficient for the bus loaded to GVWR. The drive axle shall have a design life to operate for not less than 300,000 miles on the design operating

profile without replacement or major repairs. The lubricant drain plug shall be magnetic type. If a planetary gear design is employed, the oil level in the planetary gears shall be easily checked through the plug or sight gauge. The axle and driveshaft components shall be rated for both propulsion and retardation modes with respect to duty cycle.

NOTE: The retardation duty cycle can be more aggressive than propulsion.

The drive shaft shall be guarded to prevent hitting any critical systems, including brake lines, coach floor or the ground, in the event of a tube or universal joint failure.

TS 33.1 Non-Drive Axle

The non-drive axle is the drive axle without the drive gear with a load rating sufficient for the load to GVWR.

TS 34. Turning Radius

TABLE 5
Maximum Turning Radius

Bus Length (approximate)	Maximum Turning Radius (see Figure 3)	Agency Requirement
35 ft	39 ft (TR0)	
40 ft	44 ft (TR0)	
60 ft	44.5 ft (outside front axle, TR0) 22.5 ft (inside rearmost axle, TR4)	

FIGURE 3
Turning Radius

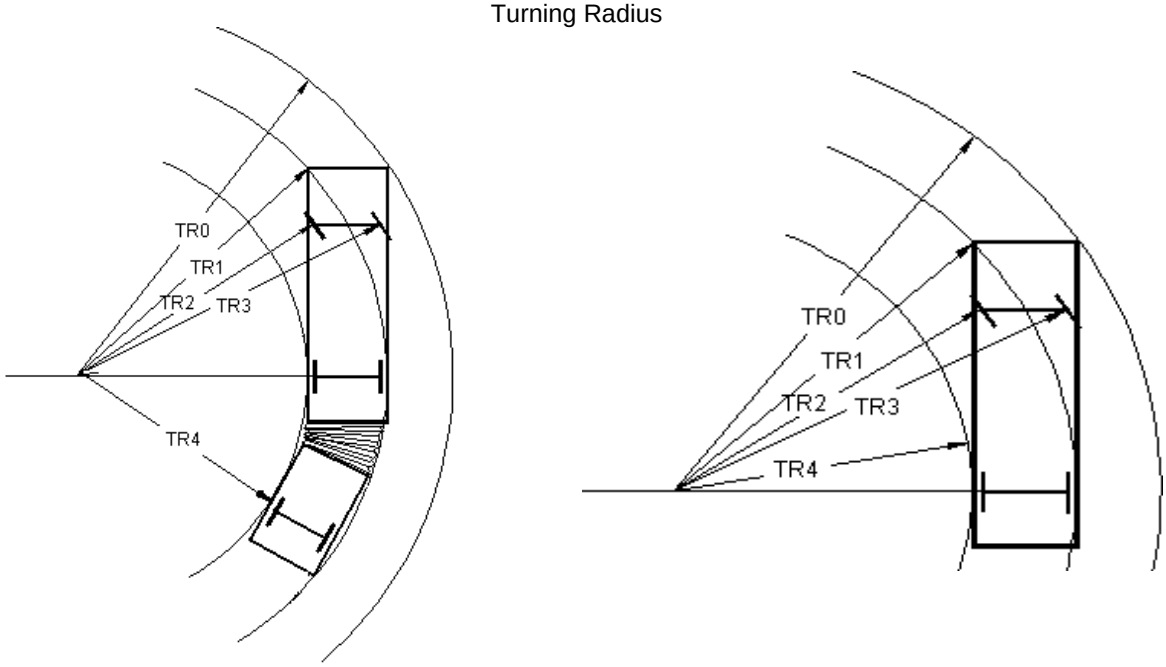

TS 35. Brakes

TS 35.1 Service Brake

BASE

Brakes shall be self-adjusting.

OPTION

TS 35.2 Actuation

BASE

Service brakes shall be controlled and actuated by a compressed air system. Force to activate the brake pedal control shall be an essentially linear function of the bus deceleration rate and shall not exceed 75 lbs at a point 7 in. above the heel point of the pedal to achieve maximum braking. The heel point is the location of the driver's heel when his or her foot is rested flat on the pedal and the heel is touching the floor or heel pad of the pedal. The ECU for the ABS system shall be protected, yet in an accessible location to allow for ease of service.

The total braking effort shall be distributed among all wheels in such a ratio as to ensure equal friction material wear rate at all wheel locations. Manufacturer shall demonstrate compliance by providing a copy of a thermodynamic brake balance test upon request.

BASE

No automatic traction control.

OPTION

TS 35.3 Friction Material

The brake linings shall be made of non-asbestos material. In order to aid maintenance personnel in determining extent of wear, a provision such as a scribe line or a chamfer indicating the thickness at which replacement becomes necessary shall be provided on each brake lining. The complete brake lining wear indicator shall be clearly visible from the hoist or pit without removing backing plates.

BASE

No remote brake wear indicator shall be required.

OPTIONS

TS 35.4 Hubs and Drums/Discs

Replaceable wheel bearing seals shall run on replaceable wear surfaces or be of an integral wear surface sealed design. Wheel bearing and hub seals and unitized hub assemblies shall not leak or weep lubricant when operating on the design operating profile for the duration of the initial manufacturer's warranty.

BASE

Drum Brakes on All Axles

The bus shall be equipped with drum brakes on all axles

OPTIONS

The brake system material and design shall be selected to absorb and dissipate heat quickly so that the heat generated during braking operation does not glaze the brake linings.

TS 35.5 Parking/Emergency Brake

BASE

Air Brakes

The parking brake shall be a spring-operated system, actuated by a valve that exhausts compressed air to apply the brakes. The parking brake may be manually enabled when the air pressure is at the operating level per FMVSS 121.

BASE

No Emergency Brake Release

OPTIONS

TS 36. Interlocks (Transit Coach)

TS 36.1 Passenger Door Interlocks

To prevent opening mid and rear passenger doors while the bus is in motion, a speed sensor shall be integrated with the door controls to prevent the mid/rear doors from being enabled or opened unless the bus speed is less than 2 mph.

To preclude movement of the bus, an accelerator interlock shall lock the accelerator in the closed position, and a brake interlock shall engage the service brake system to stop movement of the bus when the driver’s door control is moved to a mid/rear door enable or open position, or a mid or rear door panel is opened more than 3 in. from the fully closed position (as measured at the leading edge of the door panel).The interlock engagement shall bring the bus to a smooth stop and shall be capable of holding a fully loaded bus on a 6 percent grade, with the engine at idle and the transmission in gear, until the interlocks are released. These interlock functions shall be active whenever the vehicle master run switch is in any run position.

All door systems employing brake and accelerator interlocks shall be supplied with supporting failure mode effects analysis (FEMA) documentation, which demonstrates that failure modes are of a failsafe type, thereby never allowing the possibility of release of interlock while an interlocked door is in an unsecured condition, unless the door master switch has been actuated to intentionally release the interlocks.

BASE

Non-adjustable brake interlock regulator.

OPTIONS

BASE

No requirements for accelerator and brake interlocks whenever front doors are open.

OPTIONS

TS 37. Pneumatic System

TS 37.1 General

The bus air system shall operate the air-powered accessories and the braking system with reserve capacity. New buses shall not leak down more than 5 psi over a 15-minute period of time as indicated on the dash gauge.

Provision shall be made to apply shop air to the bus air systems. A quick disconnect fitting shall be easily accessible and located in the engine compartment and near the front bumper area for towing. Retained caps shall be installed to protect fitting against dirt and moisture when not in use. Air for the compressor shall be filtered. The air system shall be protected per FMVSS 121.

TS 37.2 Air Compressor

BASE

The engine-driven air compressor shall be sized to charge the air system from 40 psi to the governor cut-off pressure in less than 4 minutes while not exceeding the fast idle speed setting of the engine.

TS 37.3 Air Lines and Fittings

Air lines, except necessary flexible lines, shall conform to the installation and material requirements of SAE Standard J1149 for copper tubing with standard, brass, flared or ball sleeve fittings, or SAE Standard J844 for nylon tubing if not subject to temperatures over 200 °F. The air on the delivery side of the compressor where it enters nylon housing shall not be above the maximum limits as stated in SAE J844. Nylon tubing shall be installed in accordance with the following color-coding standards:

BASE

- **Green:** Indicates primary brakes and supply.
- **Red:** Indicates secondary brakes.
- **Brown:** Indicates parking brake.
- **Yellow:** Indicates compressor governor signal.
- **Black:** Indicates accessories.

Line supports shall prevent movement, flexing, tension, strain and vibration. Copper lines shall be supported to prevent the lines from touching one another or any component of the bus. To the extent

practicable and before installation, the lines shall be pre-bent on a fixture that prevents tube flattening or excessive local strain. Copper lines shall be bent only once at any point, including pre-bending and installation. Rigid lines shall be supported at no more than 5 ft intervals. Nylon lines may be grouped and shall be supported at 30 in. intervals or less.

The compressor discharge line between powerplant and body-mounted equipment shall be flexible convoluted copper or stainless steel line, or may be flexible Teflon hose with a braided stainless steel jacket. Other lines necessary to maintain system reliability shall be flexible Teflon hose with a braided stainless steel jacket. End fittings shall be standard SAE or JIC brass or steel, flanged, swivel-type fittings. Flexible hoses shall be as short as practicable and individually supported. They shall not touch one another or any part of the bus except for the supporting grommets. Flexible lines shall be supported at 2 ft intervals or less.

Air lines shall be clean before installation and shall be installed to minimize air leaks. All air lines shall be routed to prevent water traps to the extent possible. Grommets or insulated clamps shall protect the air lines at all points where they pass through understructure components.

TS 37.4 Air Reservoirs

All air reservoirs shall meet the requirements of FMVSS Standard 121 and SAE Standard J10 and shall be equipped with drain plugs and guarded or flush type drain valves. Major structural members shall protect these valves and any automatic moisture ejector valves from road hazards. Reservoirs shall be sloped toward the drain valve. All air reservoirs shall have drain valves that discharge below floor level with lines routed to eliminate the possibility of water traps and/or freezing in the drain line.

TS 37.5 Air System Dryer

An air dryer shall prevent accumulation of moisture and oil in the air system. The air dryer system shall include one or more replaceable desiccant cartridges.

BASE

No requirements for additional oil separator provision.

OPTIONS

BASE

The air system shall be equipped with an air dryer located before the no. 1 air tank and as far from the compressor as possible to allow air to cool prior to entering the air dryer.

ELECTRICAL, ELECTRONIC AND DATA COMMUNICATION SYSTEMS

TS 38. Overview

The electrical system will consist of vehicle battery systems and components that generate, distribute and store power throughout the vehicle. (e.g., generator, voltage regulator, wiring, relays and connectors).

Electronic devices are individual systems and components that process and store data, integrate electronic information or perform other specific functions.

The data communication system consists of the bi-directional communications networks that electronic devices use to share data with other electronic devices and systems. Communication networks are essential to integrating electronic functions, both on board the vehicle and off.

Information level systems that require vehicle information for their operations or provide information shall adhere to J1939 data standard.

Data communications systems are divided into three levels to reflect the use of multiple data networks:

- **Powertrain level:** Components related to the powertrain, including the propulsion system components (engine, transmission and hybrid units) and anti-lock braking system (ABS),which may include traction control. At a minimum, powertrain components consisting of the engine, transmission, retarder, ASR and anti-lock braking systems shall be powered by a dedicated and isolated ignition supply voltage to ensure data communication between components exists when the vehicle ignition is switched to the “on” position.
- **Information level:** Components whose primary function is the collection, control or display of data that is not necessary to the safe drivability of the vehicle (i.e., the vehicle will continue to operate when those functions are inoperable). These components typically consist of those required for automatic vehicle location (AVL) systems, destination signs, fareboxes, passenger counters, radio systems, automated voice and signage systems, video surveillance and similar components.
- **Multiplex level:** Electrical or electronic devices controlled through input/output signals such as discrete, analog and serial data information (i.e., on/off switch inputs, relay or relay control outputs). Multiplexing is used to control components not typically found on the drivetrain or information levels, such as lights; wheelchair lifts; doors; heating, ventilation and air conditioning (HVAC) systems (if applicable); and gateway devices.

FIGURE 4

Data Communications Systems Levels

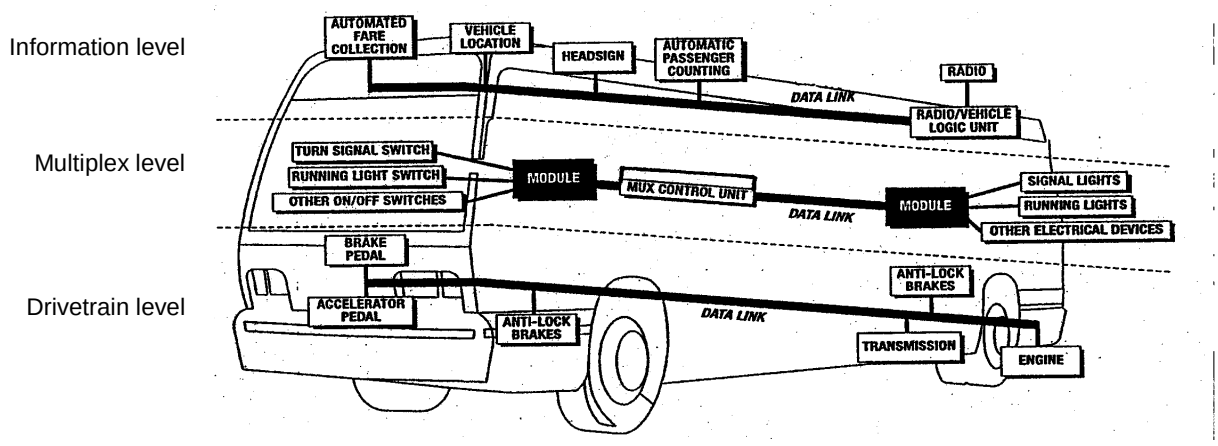

TS 38.1 Modular Design

Design of the electrical, electronic and data communication systems shall be modular so that each electronic device, apparatus panel, or wiring bundle is easily separable from its interconnect by means of connectors.

Powerplant wiring shall be an independent wiring harness. Replacement of the engine compartment wiring harness(es) shall not require pulling wires through any bulkhead or removing any terminals from the wires.

TS 39. Environmental and Mounting Requirements

The electrical system and its electronic components shall be capable of operating in the area of the vehicle in which they will be installed, as recommended in SAE J1455.

Electrical and electronic equipment shall not be located in an environment that will reduce the performance or shorten the life of the component or electrical system when operating within the design operating profile. As a recommendation, no vehicle component shall generate, or be affected by, electromagnetic interference or radio-frequency interference (EMI/RFI) that can disturb the performance of electrical/electronic equipment as defined in SAE J1113 and UNECE Council Directive 95/54 (R10).

The Agency shall follow recommendations from bus manufacturers and subsystem suppliers regarding methods to prevent damage from voltage spikes generated from welding, jump starts, shorts, etc.

TS 39.1 Hardware Mounting

The mounting of the hardware shall not be used to provide the sole source ground, and all hardware shall be isolated from potential EMI/RFI, as referenced in SAE J1113.

All electrical/electronic hardware mounted in the interior of the vehicle shall be inaccessible to passengers and hidden from view unless intended to be viewed. The hardware shall be mounted in such a manner as to protect it from splash or spray.

All electrical/electronic hardware mounted on the exterior of the vehicle that is not designed to be installed in an exposed environment shall be mounted in a sealed enclosure.

All electrical/electronic hardware and its mounting shall comply with the shock and vibration requirements of SAE J1455.

TS 40. General Electrical Requirements

TS 40.1 Batteries

TS 40.1.1 Low-Voltage Batteries (24 V)

BASE

Two 8D Battery Units

Two 8D battery units conforming to SAE Standard J537 shall be provided. Each battery shall have a minimum of 1150 cold cranking amps. Each battery shall have a purchase date no more than 120 days from the date of release, and shall be fully maintained prior to shipment to the Agency. The battery compartment must be well-ventilated to prevent hydrogen buildup while protecting the compartment from road spray, water intrusion and de-icing chemicals.

OPTIONS

BASE

Same Size Terminal Ends

Positive and negative terminal ends shall be the same size.

OPTIONS

TS 40.1.2 Battery Cables

The battery terminal ends and cable ends shall be color-coded with red for the primary positive, black for negative and another color for any intermediate voltage cables. Positive and negative battery cables shall not cross each other if at all possible, shall be flexible and shall be sufficiently long to reach the batteries with the tray in the extended position without stretching or pulling on any connection and shall not lie directly on top of the batteries. Except as interrupted by the master battery switch, battery and starter wiring shall be continuous cables with connections secured by bolted terminals and shall conform to specification requirements of SAE Standard J1127–Type SGR, SGT, SGX or GXL and SAE Recommended Practice J541, with 2100 strand 4/0 cable or greater recommended.

BASE

No color code is for voltage is required.

OPTIONS

TS 40.1.3 Jump Start

BASE

No requirements for jump-start connector.

OPTIONS

TS 40.1.4 Battery Compartment

The battery compartment shall prevent accumulation of snow, ice and debris on top of the batteries and shall be vented and self-draining. It shall be accessible only from the outside of the vehicle. All components within the battery compartment, and the compartment itself, shall be protected from damage or corrosion from the electrolyte. The inside surface of the battery compartment's access door shall be electrically insulated, as required, to prevent the battery terminals from shorting on the door if the door is damaged in an accident or if a battery comes loose. The battery compartment temperature should not exceed manufacturers specification.

The vehicle shall be equipped with a 12 V DC and 24 V DC quick disconnect switch(es). The battery compartment door shall conveniently accommodate operation of the 12 V DC and 24 V DC quick disconnect switch(es).

The battery quick disconnect access door shall be identified with a decal. The decal size shall not be less than 3.5 × 5 in. (8.89 × 12.7 cm).

The battery hold-down bracket shall be constructed of a nonconductive and corrosion-resistant material (plastic or fiberglass).

This access door shall not require any special locking devices to gain access to the switch, and it shall be accessible without removing or lifting the panel. The door shall be flush-fitting and incorporate a spring tensioner or equal to retain the door in a closed position when not in use.

The batteries shall be securely mounted on a stainless steel or equivalent tray that can accommodate the size and weight of the batteries. The battery tray, if applicable, shall pull out easily and properly support the batteries while they are being serviced. The tray shall allow each battery cell to be easily serviced. A locking device shall retain the battery tray to the stowed position.

If not located in the engine compartment, the same fire-resistant properties must apply to the battery compartment. No sparking devices should be located within the battery box.

TS 40.1.5 Auxiliary Electronic Power Supply

If required, gel-pack, or any form of sealed (non-venting) batteries used for auxiliary power are allowed to be mounted on the interior of the vehicle if they are contained in an enclosed, non-airtight compartment and accessible only to maintenance personnel. This compartment shall contain a warning label prohibiting the use of lead-acid batteries.

TS 40.1.6 Master Battery Switch

The location of the master battery switch shall be clearly identified on the exterior access panel, be accessible in less than 10 seconds for deactivation and prevent corrosion from fumes and battery acid when the batteries are washed off or are in normal service.

Turning the master switch off with the powerplant operating, during an emergency, shall shut off the engine and shall not damage any component of the electrical system. The master switch shall be capable of carrying and interrupting the total circuit load.

BASE

Single Switch

The batteries shall be equipped with a single switch for disconnecting both 12 V and 24 V power.

TS 40.1.7 Low-Voltage Generation and Distribution

The low-voltage generating system shall maintain the charge on fully charged batteries, except when the vehicle is at standard idle with a total low-voltage generator load exceeding 70 percent of the low-voltage generator nameplate rating.

Voltage monitoring and over-voltage output protection (recommended at 32 V) shall be provided.

Dedicated power and ground shall be provided as specified by the component or system manufacturer. Cabling to the equipment must be sized to supply the current requirements with no greater than a 5 percent volt drop across the length of the cable.

TS 40.1.8 Circuit Protection

All branch circuits, except battery-to-starting motor and battery-to-generator/alternator circuits, shall be protected by current-limiting devices such as circuit breakers, fuses or solid-state devices sized to the requirements of the circuit. Electronic circuit protection for the cranking motor shall be provided to prevent engaging of the motor for more than 30 seconds at a time to prevent overheating. The circuit breakers or fuses shall be easily accessible for authorized personnel. Fuses shall be used only where it can be demonstrated that circuit breakers are not practicable. This requirement applies to in-line fuses

supplied by either the Contractor or a supplier. Fuse holders shall be constructed to be rugged and waterproof. All manual reset circuit breakers critical to the operation of the bus shall be mounted in a location convenient to the Agency mechanic with visible indication of open circuits. The Agency shall consider the application of automatic reset circuit breakers on a case-by-case basis. The Contractor shall show all in-line fuses in the final harness drawings. Any manually resettable circuit breakers shall provide a visible indication of open circuits. Any manually resettable circuit breakers shall provide a visible indication of open circuits.

Circuit breakers or fuses shall be sized to a minimum of 15 percent larger than the total circuit load. The current rating for the wire used for each circuit must exceed the size of the circuit protection being used.

TS 40.2 Grounds

The battery shall be grounded to the vehicle chassis/frame at one location only, as close to the batteries as possible. When using a chassis ground system, the chassis shall be grounded to the frame in multiple locations, evenly distributed throughout the vehicle to eliminate ground loops. No more than five ground ring/spade terminal connections shall be made per ground stud with spacing between studs ensuring contactivity and serviceability. Electronic equipment requiring an isolated ground to the battery (i.e., electronic ground) shall not be grounded through the chassis.

TS 40.3 Low Voltage/Low Current Wiring and Terminals

All power and ground wiring shall conform to specification requirements of SAE Recommended Practice J1127, J1128 and J1292. Double insulation shall be maintained as close to the junction box, electrical compartment or terminals as possible. The requirement for double insulation shall be met by wrapping the harness with plastic electrical tape or by sheathing all wires and harnesses with non-conductive, rigid or flexible conduit.

Wiring shall be grouped, numbered and/or color-coded. Wiring harnesses shall not contain wires of different voltage classes unless all wires within the harness are insulated for the highest voltage present in the harness. Kinking, grounding at multiple points, stretching, and exceeding minimum bend radius shall be prevented.

Strain-relief fittings shall be provided at all points where wiring enters electrical compartments. Grommets or other protective material shall be installed at points where wiring penetrates metal structures outside of electrical enclosures. Wiring supports shall be protective and non-conductive at areas of wire contact and shall not be damaged by heat, water, solvents or chafing.

To the extent practicable, wiring shall not be located in environmentally exposed locations under the vehicle. Wiring and electrical equipment necessarily located under the vehicle shall be insulated from water, heat, corrosion and mechanical damage. Where feasible, front-to-rear electrical harnesses should be installed above the window line of the vehicle.

All wiring harnesses over 5 ft long and containing at least five wires shall include 10 percent (minimum one wire) excess wires for spares. This requirement for spare wires does not apply to datalinks and communication cables. Wiring harness length shall allow end terminals to be replaced twice without pulling, stretching or replacing the wire. Terminals shall be crimped to the wiring according to the connector manufacturer’s recommendations for techniques and tools. All cable connectors shall be locking type, keyed and sealed, unless enclosed in watertight cabinets or vehicle interior. Pins shall be removable, crimp contact type, of the correct size and rating for the wire being terminated. Unused pin positions shall be sealed with sealing plugs. Adjacent connectors shall use either different inserts or different insert orientations to prevent incorrect connections.

Terminals shall be crimped, corrosion-resistant and full ring type or interlocking lugs with insulating ferrules. When using pressure type screw terminal strips, only stranded wire shall be used. Insulation clearance shall ensure that wires have a minimum of “visible clearance” and a maximum of two times the conduct or diameter or 1/16 in., whichever is less. When using shielded or coaxial cable, upon stripping of the insulation, the metallic braid shall be free from frayed strands that can penetrate the insulation of the inner wires.

Ultra-sonic and T-splices may be used with 8 AWG or smaller wire. When a T-splice is used, it shall meet these additional requirements:

- It shall include a mechanical clamp in addition to solder on the splice.
- The wire shall support no mechanical load in the area of the splice.
- The wire shall be supported to prevent flexing.

All splicing shall be staggered in the harness so that no two splices are positioned in the same location within the harness.

Wiring located in the engine compartment shall be routed away from high-heat sources or shielded and/or insulated from temperatures exceeding the wiring and connector operating requirements.

The instrument panel and wiring shall be easily accessible for service from the driver’s seat or top of the panel. The instrument panel shall be separately removable and replaceable without damaging the instrument panel or gauges. Wiring shall have sufficient length and be routed to permit service without stretching or chafing the wires.

TS 40.4 Electrical Components

All electrical components, including switches, relays, flashers and circuit breakers, shall be heavy-duty designs with either a successful history of application in heavy-duty vehicles or design specifications for an equivalent environment.

All electric motors shall be heavy-duty brushless type where practical, and have a continuous duty rating of no less than 40,000 hours (except cranking motors, washer pumps, auxiliary heater pumps, defroster and wiper motors). All electric motors shall be easily accessible for servicing.

TS 40.5 Electrical Compartments

All relays, controllers, flashers, circuit breakers and other electrical components shall be mounted in easily accessible electrical compartments. All compartments exposed to the outside environment shall be corrosion-resistant and sealed. The components and their functions in each electrical compartment shall be identified and their location permanently recorded on a drawing attached to the inside of the access panel or door. The drawing shall be protected from oil, grease, fuel and abrasion.

The front compartment shall be completely serviceable from the driver’s seat, vestibule or from the outside. “Rear start and run” controls shall be mounted in an accessible location in the engine compartment and shall be protected from the environment.

TS 41. General Electronic Requirements

If an electronic component has an internal real-time clock, it shall provide its own battery backup to monitor time when battery power is disconnected, and/or it may be updated by a network component. If an electronic component has an hour meter, it shall record accumulated service time without relying on battery backup.

All electronic component suppliers shall ensure that their equipment is self-protecting in the event of shorts in the cabling, and also in over-voltage (over 32 V DC on a 24 V DC nominal voltage rating with a maximum of 50 V DC) and reverse polarity conditions. If an electronic component is required to interface with other components, it shall not require external pull-up and/or pull-down resistors. Where this is not possible, the use of a pull-up or pull-down resistor shall be limited as much as possible and easily accessible and labeled.

TS 41.1 Wiring and Terminals

Kinking, grounding at multiple points, stretching and reducing the bend radius below the manufacturer's recommended minimum shall not be permitted.

TS 41.1.1 Discrete I/O (Inputs/Outputs)

All wiring to I/O devices, either at the harness level or individual wires, shall be labeled, stamped or color-coded in a fashion that allows unique identification at a spacing not exceeding 4 in. Wiring for each I/O device shall be bundled together. If the I/O terminals are the same voltages, then jumpers may be used to connect the common nodes of each I/O terminal.

TS 41.1.2 Shielding

All wiring that requires shielding shall meet the following minimum requirements. A shield shall be generated by connecting to a ground, which is sourced from a power distribution bus bar or chassis. A shield shall be connected at one location only, typically at one end of the cable. However, certain standards or special requirements, such as SAE J1939 or RF applications, have separate shielding techniques that also shall be used as applicable.

> **NOTE:** A shield grounded at both end forms a ground loop, which can cause intermittent control or faults.

When using shielded or coaxial cable, upon stripping of the insulation, the metallic braid shall be free from frayed strands, which can penetrate the insulation of the inner wires. To prevent the introduction of noise, the shield shall not be connected to the common side of a logic circuit.

TS 41.1.3 Communications

The data network cabling shall be selected and installed according to the selected protocol requirements. The physical layer of all network communication systems shall not be used for any purpose other than communication between the system components, unless provided for in the network specifications.

Communications networks that use powerline carriers (e.g., data modulated on a 24 V powerline) shall meet the most stringent applicable wiring and terminal specifications.

TS 41.1.4 Radio Frequency (RF)

RF components, such as radios, video devices, cameras, global positioning systems (GPS), etc., shall use coaxial cable to carry the signal. All RF systems require special design consideration for losses along the cable. Connectors shall be minimized, since each connector and crimp has a loss that will attribute to attenuation of the signal. Cabling should allow for the removal of antennas or attached electronics without removing the installed cable between them. If this cannot be done, then a conduit of sufficient size shall be provided for ease of attachment of antenna and cable assembly. The corresponding component vendors shall be consulted for proper application of equipment, including installation of cables.

TS 41.1.5 Audio

Cabling used for microphone level and line level signals shall be 22 AWG minimum with shielded twisted pair. Cabling used for amplifier level signals shall be 18 AWG minimum.

TS 42. Multiplexing

TS 42.1 General

The primary purpose of the multiplexing system is control of components necessary to operate the vehicle. This is accomplished by processing information from input devices and controlling output devices through the use of an internal logic program.

Versatility and future expansion shall be provided for by expandable system architecture. The multiplex system shall be capable of accepting new inputs and outputs through the addition of new modules and/or the utilization of existing spare inputs and outputs. All like components in the multiplex system shall be modular and interchangeable with self-diagnostic capabilities. The modules shall be easily accessible for troubleshooting electrical failures and performing system maintenance. Multiplex input/output modules shall use solid-state devices to provide extended service life and individual circuit protection.

BASE

Ten percent of the total number of inputs and outputs, or at least one each for each voltage type utilized (0 V, 12 V, 24 V) at each module location shall be designated as spares.

OPTIONS

TS 42.2 System Configuration

Multiplexing may either be distributed or centralized. A distributed system shall process information on multiple control modules within the network. A centralized system shall process the information on a single control module. Either system shall consist of several modules connected to form a control network.

TS 42.2.1 I/O Signals

The input/output for the multiplex system may contain four types of electrical signals: discrete, modulating, analog or serial data.

Discrete signals shall reflect the on/off status of switches, levers, limit switches, lights, etc. Analog signals shall reflect numerical data as represented by a voltage signal (0–12 V, 10–24 V, etc.) or current signal (4–20 mA). Both types of analog signals shall represent the status of variable devices such as rheostats, potentiometers, temperature probes, etc. Serial data signals shall reflect ASCII or alphanumeric data used in the communication between other on-board components.

TS 43. Data Communications

TS 43.1 General

All data communication networks shall be either in accordance with a nationally recognized interface standard, such as those published by SAE, IEEE or ISO, or shall be published to the Agency with the following minimum information:

- Protocol requirements for all timing issues (bit, byte, packet, inter-packet timing, idle line timing, etc.) packet sizes, error checking and transport (bulk transfer of data to/from the device).

- Data definition requirements that ensure access to diagnostic information and performance characteristics.
- The capability and procedures for uploading new application or configuration data.
- Access to revision level of data, application software and firmware.
- The capability and procedures for uploading new firmware or application software.
- Evidence that applicable data shall be broadcast to the network in an efficient manner such that the overall network integrity is not compromised.

Any electronic vehicle components used on a network shall be conformance tested to the corresponding network standard.

TS 43.2 Drivetrain Level

Drivetrain components, consisting of the engine, transmission, retarder, anti-lock braking system and all other related components, shall be integrated and communicate fully with respect to vehicle operation with data using SAE Recommended Communications Protocols such as J1939 and/or J1708/J1587 with forward and backward compatibilities or other open protocols. At a minimum, drivetrain components consisting of the engine, transmission, retarder ASR, and anti-lock braking systems shall be powered by a dedicated and isolated ignition supply voltage to ensure data communication among components exists when the vehicle ignition is switched to the “on” position.

TS 43.2.1 Diagnostics, Fault Detection and Data Access

Drivetrain performance, maintenance and diagnostic data, and other electronic messages shall be formatted and transmitted on the communications networks.

The drivetrain level shall have the ability to record abnormal events in memory and provide diagnostic codes and other information to service personnel. At a minimum, this network level shall provide live/fail status, current hardware serial number, software/data revisions and uninterrupted timing functions.

TS 43.2.2 Programmability (Software)

The drivetrain level components shall be programmable by the Agency with limitations as specified by the subsystem Supplier.

TS 43.3 Multiplex Level

TS 43.3.1 Data Access

At a minimum, information shall be made available via a communication port on the multiplex system. The location of the communication port shall be easily accessible. A hardware gateway and/or wireless communications system are options if requested by the Agency. The communication port(s) shall be located as specified by the Agency.

TS 43.3.2 Diagnostics and Fault Detection

The multiplex system shall have a proven method of determining its status (system health and input/output status) and detecting either active (online) or inactive (offline) faults through the use of on-board visual/audible indicators.

In addition to the indicators, the system shall employ an advanced diagnostic and fault detection system, which shall be accessible via either a personal computer or a handheld unit. Either unit shall have the ability to check logic function. The diagnostic data can be incorporated into the information level network or the central data access system.

BASE

No requirement for mock-up board.

TS 43.3.3 Programmability (Software)

The multiplex system shall have security provisions to protect its software from unwanted changes. This shall be achieved through any or all of the following procedures:

- Password protection
- Limited distribution of the configuration software
- Limited access to the programming tools required to change the software
- Hardware protection that prevents undesired changes to the software

Provisions for programming the multiplex system shall be possible through a PC or laptop. The multiplex system shall have proper revision control to ensure that the hardware and software are identical on each vehicle equipped with the system. Revision control shall be provided by all of the following:

- Hardware component identification where labels are included on all multiplex hardware to identify components
- Hardware series identification where all multiplex hardware displays the current hardware serial number and firmware revision employed by the module
- Software revision identification where all copies of the software in service display the most recent revision number
- A method of determining which version of the software is currently in use in the multiplex system

BASE

Revision control labels shall be electronic.

TS 43.4 Electronic Noise Control

Electrical and electronic subsystems and components on all buses shall not emit electromagnetic radiation that will interfere with on-board systems, components or equipment, telephone service, radio or TV reception, or violate regulations of the Federal Communications Commission.

Electrical and electronic subsystems on the coaches shall not be affected by external sources of RFI/EMI. This includes, but is not limited to, radio and TV transmission, portable electronic devices including computers in the vicinity of or onboard the buses, AC or DC power lines and RFI/EMI emissions from other vehicles.

DRIVER PROVISIONS, CONTROLS AND INSTRUMENTATION

TS 44. Driver’s Area Controls

TS 44.1 General

In general when designing the driver’s area, it is recommended that SAE J833, “Human Physical Dimensions,” be used.

Switches and controls shall be divided into basic groups and assigned to specific areas, in conformance with SAE Recommended Practice J680, Revised 1988, “Location and Operation of Instruments and

Controls in Motor Truck Cabs," and be essentially within the hand reach envelope described in SAE Recommended Practice J287, "Driver Hand Control Reach."

TS 44.2 Glare

The driver's work area shall be designed to minimize glare to the extent possible. Objects within and adjacent to this area shall be matte black or dark gray in color wherever possible to reduce the reflection of light onto the windshield. The use of polished metal and light-colored surfaces within and adjacent to the driver's area shall be avoided.

TS 44.3 Visors/Sun Shades

BASE

Front and Side Sun Shade/Visor

Adjustable sun visor(s) shall be provided for the driver's windshield and the driver's side window. Visors shall be shaped to minimize light leakage between the visor and windshield pillars. Visors shall store out of the way and shall not obstruct airflow from the climate control system or interfere with other equipment, such as the radio handset or the destination control. Deployment of the visors shall not restrict vision of the rearview mirrors. Visor adjustments shall be made easily by hand with positive locking and releasing devices and shall not be subject to damage by over-tightening. Sun visor construction and materials shall be strong enough to resist breakage during adjustments. Visors may be transparent but shall not allow a visible light transmittance in excess of 10 percent. Visors, when deployed, shall be effective in the driver's field of view at angles more than 5 deg above the horizontal.

OPTIONS

TS 44.4 Driver's Controls

Frequently used controls must be in easily accessible locations. These include the door control, kneel control, windshield wiper/washer controls, ramp, and lift and run switch. Any switches and controls necessary for the safe operation of the bus shall be conveniently located and shall provide for ease of operation. They shall be identifiable by shape, touch and permanent markings. Controls also shall be located so that passengers may not easily tamper with control settings.

All panel-mounted switches and controls shall be marked with easily read identifiers. Graphic symbols shall conform to SAE Recommended Practice J2402, "Road Vehicles – Symbols For Controls, Indicators, and Tell Tales," where available and applicable. Color of switches and controls shall be dark with contrasting typography or symbols.

Mechanical switches and controls shall be replaceable, and the wiring at these controls shall be serviceable from a convenient location. Switches, controls and instruments shall be dust- and water-resistant.

BASE

All switches/controls in the driver's controls area shall be mounted in an angled panel steep enough to discourage drivers from using it as a personal storage area for items like food, drinks, cell phones, etc.

OPTIONS

TS 44.5 Normal Bus Operation Instrumentation and Controls

The following list identifies bus controls used to operate the bus. These controls are either frequently used or critical to the operation of the bus. They shall be located within easy reach of the operator. The operator shall not be required to stand or turn to view or actuate these controls unless specified otherwise.

Systems or components monitored by onboard diagnostics system shall be displayed in clear view of the operator and provide visual and/or audible indicators. The intensity of indicators shall permit easy determination of on/off status in bright sunlight but shall not cause a distraction or visibility problem at night. All indicators shall be illuminated using backlighting.

The indicator panel shall be located in Area 1 or Area 5, within easy view of the operator instrument panel. All indicators shall have a method of momentarily testing their operation. The audible alarm shall be tamper-resistant and shall have an outlet level between 80 and 83 dBA when measured at the location of the operator's ear.

On-board displays visible to the operator shall be limited to indicating the status of those functions described herein that are necessary for the operation of the bus. All other indicators needed for diagnostics and their related interface hardware shall be concealed and protected from unauthorized access. **Table 6** represents instruments and alarms. The intent of the overall physical layout of the indicators shall be in a logical grouping of systems and severity nature of the fault.

Consideration shall be provided for future additions of spare indicators as the capability of onboard diagnostic systems improves. Blank spaces shall contain LEDs.

TABLE 6 (Transit Coach)

Transit Bus Instruments and Alarms

Device	Description	Location	Function	Visual/ Audible
Master run switch	Rotary, four-position detent	Side console	Master control for bus, off, day run, night run and clearance ID lights	
Engine start, front	Approved momentary switch	Side console	Activates engine starter motor	
Engine start, rear	Approved momentary switch	Engine compartment	Activates engine starter motor	
Engine run, rear	Three-position toggle switch	Engine compartment	Permits running engine from rear start, normal front run position and off	Amber light
Drive selector	Touch panel switch	Side console	Provides selection of propulsion: forward, reverse and neutral	Gear selection
HVAC	Switch or switches to control HVAC	Side console	Permits selection of passenger ventilation: off, cool, heat, low fan, high fan or full auto with on/off only	
Driver's ventilation	Rotary, three-position detent	Side console or dash left wing	Permits supplemental ventilation: fan off, low or high	
Defroster fan	Rotary, three-position detent	Side console or dash left wing	Permits defroster: fan off, low, medium or high	

TABLE 6 (Transit Coach)

Transit Bus Instruments and Alarms

Device	Description	Location	Function	Visual/ Audible
Defroster temperature	Variable position	Side console or dash left wing	Adjusts defroster water flow and temperature	
Windshield wiper	One-variable rotary position operating both wipers	Dash left wing	Variable speed control of left and right windshield wipers	
Windshield washer	Push button	Dash left wing	Activates windshield washers	
Dash panel lights	Rotary rheostat or stepping switch	Side console or dash left wing	Provides adjustment for light intensity in night run position	
Interior lights	Three-position switch	Side console	Selects mode of passenger compartment lighting: off, on, normal	
Fast idle	Two-position switch	Side console	Selects high idle speed of engine	
WC ramp/ kneel enable	Two-position switch[1]	Side console or dash right wing	Permits operation of ramp and kneel operations at each door remote panel	Amber light
Front door ramp/kneel enable	Two-position keyed switch[1]	Front door remote or dash right wing	Permits ramp and kneel activation from front door area, key required[1]	Amber light
Front door ramp	Three-position momentary switch	Right side of steering wheel	Permits deploy and stow of front ramp	Red light
Front kneel	Three-position momentary switch	Front door remote	Permits kneeling activation and raise and normal at front door remote location	Amber or red dash indicator; exterior alarm and amber light
Rear door ramp/kneel enable	Two-position keyed switch[1]	Rear door remote	Permits ramp and kneel activation from rear door area; key required[1]	Red light
Rear door ramp	Three-position momentary switch	Rear door remote	Permits deploy and stow of rear ramp	
Rear kneel	Three-position momentary switch	Rear door remote	Permits kneeling activation and raise and normal at rear door remote location	
Silent alarm	Recessed push button, NO and NC contacts momentary	Side console	Activates emergency radio alarm at dispatch and permits covert microphone and/or enables destination sign emergency message	
Video system event switch	Momentary on/off momentary switch with plastic guard	Side console	Triggers event equipment, triggers event light on dash	Amber light
Left remote mirror	Four-position toggle type	Side console	Permits two-axis adjustment of left exterior mirror	
Right remote mirror	Four-position toggle type	Side console	Permits two-axis adjustment of right exterior mirror	

TABLE 6 (Transit Coach)

Transit Bus Instruments and Alarms

Device	Description	Location	Function	Visual/ Audible
Mirror heater	Switch or temperature activated	Side console	Permits heating of outside mirrors when required	
Passenger door control	Five-position handle type detent or two momentary push buttons	Side console, forward	Permits open/close control of front and rear passenger doors	Red light
Rear door override	Two-position switch in approved location	Side console, forward	Allows driver to override activation of rear door passenger tape switches	
Engine shutdown override	Momentary switch with operation protection	Side console	Permits driver to override auto engine shutdown	
Hazard flashers	Two-position switch	Side console or dash right wing	Activates emergency flashers	Two green lights
Fire suppression	Red push button with protective cover	Dash left wing or dash center	Permits driver to override and manually discharge fire suppression system	Red light
Mobile data terminal	Mobile data terminal coach operator interface panel	Above right dash wing	Facilitates driver interaction with communication system and master log-on	LCD display with visual status and text messages
Farebox interface	Farebox coach operator interface panel	Near farebox	Facilitates driver interaction with farebox system	LCD display
Destination sign interface	Destination sign interface panel	In approved location	Facilitates driver interaction with destination sign system, manual entry	LCD display
Turn signals	Momentary push button (two required) raised from other switches	Left foot panel	Activates left and right turn signals	Two green lights and optional audible indicator
PA manual	Momentary push button	In approved location	Permits driver to manually activate public address microphone	
Low-profile microphone	Low-profile discrete mounting	Steering column	Permits driver to make announcements with both hands on the wheel and focusing on road conditions	
High beam	Detented push button	In approved location	Permits driver to toggle between low and high beam	Blue light
Parking brake	Pneumatic PPV	Side console or dash left wing	Permits driver to apply and release parking brake	Red light
Park brake release	Pneumatic PPV	Vertical side of the side console or dash center	Permits driver to push and hold to release brakes	
Hill holder	Two-position momentary switch	Side console	Applies brakes to prevent bus from rolling	

TABLE 6 (Transit Coach)

Transit Bus Instruments and Alarms

Device	Description	Location	Function	Visual/ Audible
Remote engine speed	Rotary rheostat	Engine compartment	Permits technician to raise and lower engine RPM from engine compartment	
Master door/ interlock	Multi-pole toggle, detented	Out of operator's reach	Permits driver override to disable door and brake/throttle interlock	Red light
Warning interlocks deactivated	Red indicator light	Dash panel center	Illuminates to warn driver that interlocks have been deactivated	Red light
Retarder disable	Multi-pole switch detented	Within reach of operator or approved location	Permits driver override to disable brake retardation/regeneration	Red light
Alarm acknowledge	Push button momentary	Approved location	Permits driver to acknowledge alarm condition	
Rear door passenger sensor disable	Multi-pole toggle, detented	In sign compartment or driver's barrier compartment	Permits driver to override rear door passenger sensing system	
Indicator/ alarm test button	Momentary switch or programming[1]	Dash center panel	Permits driver to activate test of sentry, indicators and audible alarms	All visuals and audibles
Auxiliary power	110 V power receptacle	Approved location	Property to specify what function to supply	
Speedometer	Speedometer, odometer, and diagnostic capability, 5-mile increments	Dash center panel	Visual indication of speed and distance traveled, accumulated vehicle mileage, fault condition display	Visual
Air pressure gauge	Primary and secondary, 5 psi increments	Dash center panel	Visual indication of primary and secondary air systems	Red light and buzzer
Fire detection	Coach operator display	Property specific or dash center	Indication of fire detection activation by zone/location	Buzzer and red light
Door obstruction	Sensing of door obstruction	Dash center	Indication of rear door sensitive edge activation	Red light and buzzer
Door ajar	Door not properly closed	Property specific or dash center	Indication of rear door not properly closed	Buzzer or alarm and red light
Low system air pressure	Sensing low primary and secondary air tank pressure	Dash center	Indication of low air system pressure	Buzzer and red light
Methane detection function	Detection of system integrity	Property specific or dash center	Detects system failure	No start condition, amber light
Methane detection	Indication of 20% LED emergency light (LEL)	Property specific or dash center	Detects levels of methane	Flashing red at 20% LEL

TABLE 6 (Transit Coach)

Transit Bus Instruments and Alarms

Device	Description	Location	Function	Visual/ Audible
Methane detection	Indication of 50% LEL	Property specific or dash center	Detects levels of methane	Solid red at 50% LEL
Engine coolant indicator	Low coolant indicator may be supplied as audible alert and visual and/or text message	Within driver's sight	Detects low coolant condition	Amber light
Hot engine indicator	Coolant temperature indicator may be supplied as audible alert and visual and/or text message	Within driver's sight	Detects hot engine condition and initiates time delay shutdown	Red light
Low engine oil pressure indicator	Engine oil pressure indicator may be supplied as audible alert and visual and/or text message	Within driver's sight	Detects low engine oil pressure condition and initiates time-delayed shutdown	Red light
ABS indicator	Detects system status	Dash center	Displays system failure	Amber light
HVAC indicator	Detects system status	Dash center	Displays system failure	Amber or red light
Charging system indicator (12/24 V)	Detect charging system status	Dash center	Detects no charge condition and optionally detects battery high, low, imbalance, no charge condition, and initiates time-delayed shutdown	Red light flashing or solid based on condition
Bike rack deployed indicator	Detects bike rack position	Dash center	Indication of bike rack not being in fully stowed position	Amber or red light
Fuel tank level	Analog gauge, graduated based on fuel type	Dash center	Indication of fuel tank level/pressure	
DEF gauge	Level Indicator	Center dash	Displays level of DEF tank and indicates with warning light when low	Red light
Active regeneration	Detects status	Dash center	Indication of electric regeneration	Amber or red light
Turntable	Detects status	Dash center	Warning indication for hinge locking	Audible and amber warning and red light if locked
Turntable	Interlock momentary switch	Side console	Momentarily release interlock brakes due to overangled condition	

1. Indicate area by drawing. Break up switch control from indicator lights.

TABLE 6 (Options, Transit Coach)

Transit Bus Instruments and Alarms

Device	Description	Location	Function	Visual/ Audible
[Contractor to provide]				

TS 44.6 Driver Foot Controls

Accelerator and brake pedals shall be designed for ankle motion. Foot surfaces of the pedals shall be faced with wear-resistant, nonskid, replaceable material.

TS 44.6.1 Pedal Angle

The vertical angle of the accelerator and brake pedals shall be determined from a horizontal plane regardless of the slope of the cab floor. The accelerator and brake pedals shall be positioned at an angle of 37 to 50 deg at the point of initiation of contact and extend downward to an angle of 10 to 18 deg at full throttle.

The location of the brake and accelerator pedals shall be determined by the manufacturer, based on space needs, visibility, lower edge of windshield and vertical H-point.

TS 44.6.2 Pedal Dimensions and Position

The floor-mounted accelerator pedal shall be 10 to 12 in. long and 3 to 4 in. wide. Clearance around the pedal must allow for no interference precluding operation.

The accelerator and brake pedals shall be positioned such that the spacing between them, measured at the heel of the pedals, is between 1 and 2 in. Both pedals should be located approximately on the same plane coincident to the surface of the pedals.

TS 44.7 Brake and Accelerator Pedals

BASE

Brake Pedal

Non-adjustable brake pedal.

OPTIONS

TS 44.8 Driver Foot Switches

Floor-Mounted Foot Control Platform

The angle of the turn signal platform shall be determined from a horizontal plane, regardless of the slope of the cab floor. The turn signal platform shall be angled at a minimum of 10 deg and a maximum of 37 deg. It shall be located no closer to the seat front than the heel point of the accelerator pedal.

BASE

Turn Signal Controls

Turn signal controls shall be floor-mounted, foot-controlled, water-resistant, heavy-duty, momentary contact switches.

BASE

Foot Switch Control

The control switches for the turn signals shall be mounted on an inclined, floor-mounted stainless steel enclosure or metal plate mounted to an incline integrated into the driver's platform, located to the left of the steering column. The location and design of this enclosure shall be such that foot room for the operator is not impeded. The inclined mounting surface shall be skid-resistant. All other signals, including high beam and public address system, shall be in approved locations.

The foot switches shall be UL-listed, heavy-duty type, of a rugged, corrosion-resistant metal construction. The foot switches for the directionals shall be momentary type, while those for the PA system and the high beam shall be latching type. The spacing of the switches shall be such that inadvertent simultaneous deflection of switches is prevented.

OPTIONS

TS 45. Driver's Amenities

TS 45.1 Coat Hanger

BASE

Coat Hanger

A suitable hanger shall be installed in a convenient, approved location for the driver's coat.

TS 45.2 Drink Holder

BASE

No drink holder.

OPTIONS

TS 45.3 Storage Box

BASE

Storage Box

An enclosed driver storage area shall be provided with a positive latching door and/or lock. The minimum size is 2750 in.^{3}

OPTIONS

TS 46. Windshield Wipers and Washers

TS 46.1 Windshield Wipers

The bus shall be equipped with a windshield wiper for each half of the windshield. At 60 mph, no more than 10 percent of the wiped area shall be lost due to windshield wiper lift. For two-piece windshields, both wipers shall park along the center edges of the windshield glass. For single-piece windshields, wipers shall park along the bottom edge of the windshield. Windshield wiper motors and mechanisms

shall be easily accessible for repairs or service. The fastener that secures the wiper arm to the drive mechanism shall be corrosion-resistant.

BASE

Single-control, electric two-speed intermittent wiper.

OPTIONS

TS 46.2 Windshield Washers

The windshield washer system, when used with the wipers, shall deposit washing fluid evenly and completely wet the entire wiped area.

The windshield washer system shall have a minimum 5-gallon reservoir, located for easy refilling from outside the bus. Reservoir pumps, lines and fittings shall be corrosion-resistant and must include a means to determine fluid level.

TS 47. Driver's Seat

FIGURE 5
Driver's Seat

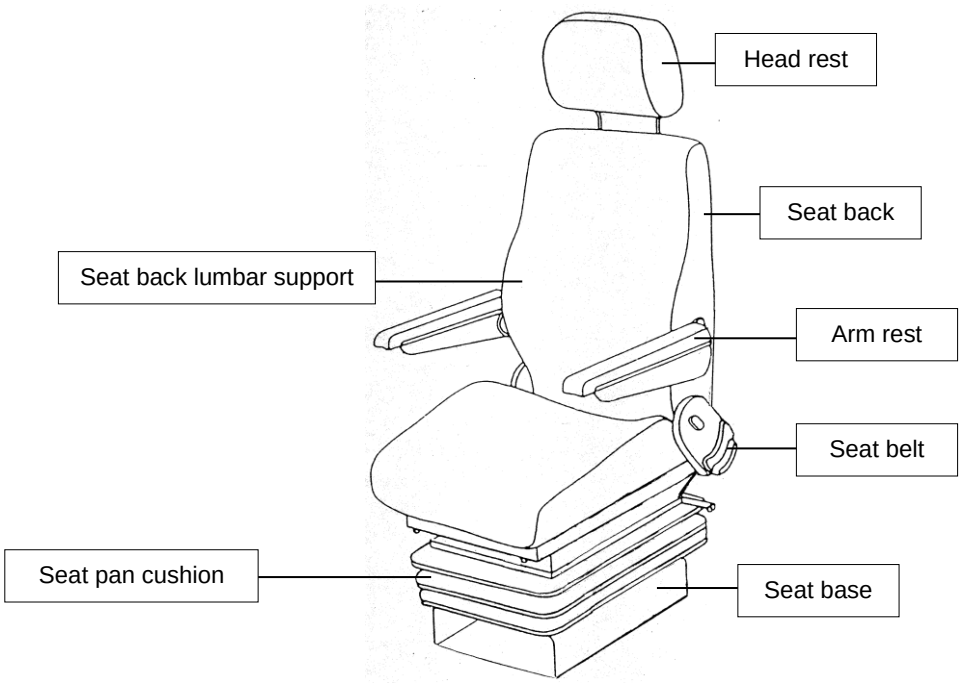

TS 47.1 Dimensions

The driver's seat shall be comfortable and adjustable so that people ranging in size from a 95th-percentile male to a 5th-percentile female may operate the bus.

TS 47.1.1 Seat Pan Cushion Length

Measurement shall be from the front edge of the seat pan to the rear at its intersection with the seat back. The adjustment of the seat pan length shall be no less than 16.5 in.at its minimum length and no more than 20.5 in.at its maximum length.

SP 1.1.1 Seat Pan Cushion Height

BASE

Dimensions

Measurement shall be from the cab floor to the top of the level seat at its center midpoint. The seat shall adjust in height from a minimum of 14 in., with a minimum 6 in. vertical range of adjustment.

TS 47.1.2 Seat Pan Cushion Slope

Measurement is the slope of the plane created by connecting the two high points of the seat, one at the rear of the seat at its intersection with the seat back and the other at the front of the seat just before it waterfalls downward at the edge. The slope can be measured using an inclinometer and shall be stated in degrees of incline relative to the horizontal plane (0 deg). The seat pan shall adjust in its slope from no less than plus 12 deg (rearward “bucket seat” incline) to no less than minus 5 deg (forward slope).

TS 47.1.3 Seat Base Fore/Aft Adjustment

Measurement is the horizontal distance from the heel point to the front edge of the seat. The minimum and maximum distances shall be measured from the front edge of the seat when it is adjusted to its minimum seat pan depth (approximately 15 in.). On all low-floor buses, the seat base shall travel horizontally a minimum of 9 in. It shall adjust no closer to the heel point than 6 in. On all high-floor buses, the seat base shall travel a minimum of 9 in. and adjust no closer to the heel point than 6 in.

TS 47.1.4 Seat Pan Cushion Width

Measurement is the horizontal distance across the seat cushion. The seat pan cushion shall be 17 to 21 in. across at the front edge of the seat cushion and 20 to 23 in. across at the side bolsters.

TS 47.1.5 Seat Suspension

The driver’s seat shall be appropriately dampened to support a minimum weight of 380 lbs. The suspension shall be capable of dampening adjustment in both directions**.**

Rubber bumpers shall be provided to prevent metal-to-metal contact.

TS 47.1.6 Seat Back

Width

Measurement is the distance between the outermost points of the front of the seat back, at or near its midpoint in height. The seat back width shall be no less than 19 in. Seat back will include dual recliner gears on both sides of the seat.

Height

Standard height seat back.

TS 47.1.7 Headrests

BASE

Adjustable headrest.

OPTIONS

TS 47.1.8 Seat Back Lumbar Support

Measurement is from the bottom of the seat back at its intersection with the seat pan to the top of the lumbar cushioning. The seat back shall provide adjustable-depth lumbar back support with three individual operating lumbar cells within a minimum range of 7 to 11 in.

TS 47.1.9 Seat Back Angle Adjustment

The seat back angle shall be measured relative to a level seat pan, where 90 deg is the upright position and 90 deg-plus represents the amount of recline.

The seat back shall adjust in angle from a minimum of no more than 90 deg (upright) to at least 105 deg (reclined), with infinite adjustment in between.

TS 47.2 Seat Belt

The belt assembly should be an auto-locking retractor (ALR).All seat belts should be stored in automatic retractors. The belts shall be mounted to the seat frame so that the driver may adjust the seat without resetting the seat belt.

The seat and seatbelt assemblies as installed in the bus shall withstand static horizontal forces as required in FMVSS 207 and 210.

BASE

Lap seat belt.

OPTIONS

BASE

Seatbelt webbing shall be black in color.

OPTIONS

BASE

All seatbelt assemblies shall come equipped with a warning switch device to remind operators to buckle up.

OPTIONS

Lap Belt Length

BASE

72 in.

The lap belt assembly shall be a minimum of 72 in. in length.

OPTIONS

TS 47.3 Adjustable Armrest

BASE

No armrests.

OPTIONS

TS 47.4 Seat Control Locations

While seated, the driver shall be able to make seat adjustments by hand without complexity, excessive effort or being pinched. Adjustment mechanisms shall hold the adjustments and shall not be subject to inadvertent changes.

TS 47.5 Seat Structure and Materials

Cushions

Cushions shall be fully padded with at least 3 in. of materials in the seating areas at the bottom and back.

Cushion Materials

BASE

Open-cell polyurethane (FMVSS 302).

OPTIONS

TS 47.6 Pedestal

BASE

Powder-coated steel.

OPTIONS

Stainless steel.

TS 47.7 Seat Options

Choose among the following:

- heated seat
- seat alarm
- fabric options

- seat air vent
- side bolsters adjustments
- silicone seat cushion

TS 47.8 Mirrors

TS 47.8.1 Exterior Mirrors

The bus shall be equipped with corrosion-resistant, outside rearview mirrors mounted with stable supports to minimize vibration. Mirrors shall be firmly attached to the bus to minimize vibration and to prevent loss of adjustment with a breakaway mounting system. Mirrors shall permit the driver to view the roadway along the sides of the bus, including the rear wheels. Mirrors should be positioned to prevent blind spots.

Mirrors shall retract or fold sufficiently to allow bus washing operations but avoid contact with windshield.

BASE

Exterior mirrors shall be installed without a breakaway mounting system.

OPTIONS

BASE

Flat Mirrors on Both Sides

The bus shall be equipped with two flat outside mirrors, each with not less than 50 sq in. of reflective surface. The mirrors shall be located so as to provide the driver a view to the rear along both sides of the bus and shall be adjustable both in the horizontal and vertical directions to view the rearward scene. The roadside rearview mirror shall be positioned so that the driver’s line of sight is not obstructed.

OPTIONS

Curbside Mirrors

The curbside rearview mirror shall be mounted so that its lower edge is no less than 76 in. above the street surface. A lower mount may be required due to mirror configuration requests.

BASE

Remote Adjustment of Curbside Mirror

The driver shall be able to adjust the curbside mirror remotely while seated in the driving position. The control for remote positioning of the mirror shall be a single switch or device.

OPTIONS

Street-Side Mirrors

BASE

Standard mirror, not heated, no remote adjustment.

OPTIONS

TS 47.8.2 Interior Mirrors

Mirrors shall be provided for the driver to observe passengers throughout the bus without leaving the seat and without shoulder movement. The driver shall be able to observe passengers in the front/entrance and rear/exit areas (if applicable), anywhere in the aisle, and in the rear seats.

WINDOWS

TS 48. General

Use with 35 ft length: A minimum of 8000 sq in. of window area, including operator and door windows, shall be required on each side of the standard configuration bus.

Use with 40 ft length: A minimum of 10,000 sq in. of window area, including operator and door windows, shall be required on each side of the standard configuration bus.

Use with 60 ft length: A minimum of 16,000 sq in. of window area, including operator and door windows, shall be required on each side of the standard configuration bus.

TS 49. Windshield

The windshield shall permit an operator's field of view as referenced in SAE Recommended Practice J1050. The vertically upward view shall be a minimum of 14 deg, measured above the horizontal and excluding any shaded band. The vertically downward view shall permit detection of an object 3½ ft high no more than 2 ft in front of the bus. The horizontal view shall be a minimum of 90 deg above the line of sight .Any binocular obscuration due to a center divider may be ignored when determining the 90 deg requirement, provided that the divider does not exceed a 3 deg angle in the operator's field of view. Windshield pillars shall not exceed 10 deg of binocular obscuration. The windshield shall be designed and installed to minimize external glare as well as reflections from inside the bus.

The windshield shall be easily replaceable by removing zip-locks from the windshield retaining moldings. Bonded-in-place windshields shall not be used. Winglets may be bonded.

TS 49.1 Glazing

The windshield glazing material shall have a ¼ in. nominal thickness laminated safety glass conforming to the requirements of ANSI Z26.1 Test Grouping AS-1 and the recommended practices defined in SAE J673.

BASE

Shaded Band

The upper portion of the windshield above the driver's field of view shall have a dark, shaded band and marked AS-3, with a minimum luminous transmittance of 5 percent when tested in accordance to ASTM D-1003.

OPTIONS

TS 50. Driver’s Side Window

The driver’s side window shall be the sliding type, requiring only the rear half of the sash to latch upon closing, and shall open sufficiently to permit the seated operator to easily adjust the street-side outside rearview mirror. When in an open position, the window shall not rattle or close during braking. This window section shall slide in tracks or channels designed to last the service life of the bus. The operator’s side window shall not be bonded in place and shall be easily replaceable. The glazing material shall have a single-density tint.

The driver’s view, perpendicular through operator’s side window glazing, should extend a minimum of 33 in. (840 mm) to the rear of the heel point on the accelerator, and in any case must accommodate a 95th percentile male operator. The view through the glazing at the front of the assembly should begin not more than 26 in. (560 mm) above the operator’s floor to ensure visibility of an under-mounted convex mirror. Driver’s window construction shall maximize ability for full opening of the window.

BASE

The driver’s side window glazing material shall have a ¼ in. nominal thickness laminated safety glass conforming to the requirements of ANSI Z26.1-1996 Test Grouping AS-2 and the recommended practices defined in SAE J673.

The design shall prevent sections from freezing closed in the winter. Light transmittance shall be 75 percent on the glass area below 53 in. from the operator platform floor. On the top-fixed-over-bottom-slider configuration, the top fixed area above 53 in. may have a maximum 5 percent light transmittance.

BASE

Hidden Frame (Flush “Euro-Look”) Driver’s Side Window

Driver's side window, flush mounted - with single sliding sash (forward), with exterior and interior handles. Non-egress.

TS 51. Side Windows

TS 51.1 Configuration

Side windows shall not be bonded in place, but shall be easily replaceable without disturbing adjacent windows and shall be mounted so that flexing or vibration from engine operation or normal road excitation is not apparent. All aluminum and steel material will be treated to prevent corrosion.

TS 51.2 Emergency Exit (Egress) Configuration

BASE

Minimum Egress

All side windows shall be fixed in position, except as necessary to meet the emergency escape requirements.

BASE

Standard Passenger Side Window Configurations

Agency to choose from the following options:

- traditional frame
  - full fixed
  - openable windows with inward-opening transom panels
  - openable windows with sliding transom panels
  - openable windows with a fixed transom panel and sliding lower panels
  - openable windows with full-height sliding panels
- hidden frame (flush “Euro-look”)
  - full fixed
  - openable windows with inward-opening transom panels.

BASE

Traditional Frame

Agency to choose from the following options:

- full fixed
- openable windows with inward-opening transom panels
- openable windows with sliding transom panels
- openable windows with a fixed transom panel and sliding lower panels
- openable windows with full-height sliding panels

OPTIONS

TS 51.3 Configuration

BASE

Fixed Side Windows

All side windows shall be fixed in position, except as necessary to meet the emergency escape requirements.

OPTIONS

TS 51.4 Materials

BASE

Safety Glass Glazing Panels

Side windows glazing material shall have a minimum of 6mm nominal thickness laminated safety glass. The material shall conform to the requirements of ANSI Z26.1-1996 Test Grouping 2 and the recommended practices defined in SAE J673.

BASE

Windows on the bus sides and in the rear door shall be tinted a neutral color, complementary to the bus exterior. The maximum solar energy transmittance shall not exceed 37 percent, as measured by ASTM E-424. Luminous transmittance shall be measured by ASTM D-1003. Windows over the destination signs shall not be tinted.

BASE

44 percent luminous transmittance.

OPTIONS

BASE

No Anti-Vandalism Film or Liner

OPTIONS

NOTE: All glass treatments must be permanent, within the glass and/or in the center membrane. Surface films are not permitted.

SHGC and light transmission performance shall be defined by the National Fenestration Rating Council.

TS 51.5 Rear Window

BASE

No requirement for rear window.

OPTIONS

HEATING, VENTILATING AND AIR CONDITIONING

TS 52. Capacity and Performance

The HVAC climate control system shall be capable of controlling the temperature and maintaining the humidity levels of the interior of the bus as defined in the following paragraphs.

BASE (DIESEL & HYBRID NON ARTIC)

Require Roof-Mounted HVAC Unit

The HVAC unit shall be roof-mounted. [Note that this includes units mounted on top of or beneath the roof surface.]

OPTIONS(CNG NON-ARTIC)

OPTIONS (ARTIC)

OPTIONS(HYBRID BUSES)

OPTIONS (DIESEL OR CNG BUSES)

With the bus running at the design operating profile with corresponding door opening cycle, and carrying a number of passengers equal to 150 percent of the seated load, the HVAC system shall control the average passenger compartment temperature within a range between 65 and 80 °F, while maintaining the relative humidity to a value of 50 percent or less. The system shall maintain these conditions while subjected to any outside ambient temperatures within a range of 10 to 95 °F and at any ambient relative humidity levels between 5 and 50 percent.

When the bus is operated in outside ambient temperatures of 95 to 115 °F, the interior temperature of the bus shall be permitted to rise 0.5 °F for each degree of exterior temperature in excess of 95 °F.

When the bus is operated in outside ambient temperatures in the range of -10 to 10 °F, the interior temperature of the bus shall not fall below 55 °F while the bus is running on the design operating profile.

System capacity testing, including pull-down/warm-up, stabilization and profile, shall be conducted in accordance to APTA's *Recommended Practice* "Transit Bus HVAC System Instrumentation and Performance Testing."

> **NOTE: THE RECOMMENDED LOCATIONS OF TEMPERATURE PROBES ARE ONLY GUIDELINES AND MAY REQUIRE SLIGHT MODIFICATIONS TO ADDRESS ACTUAL BUS DESIGN. CARE MUST BE TAKEN TO AVOID PLACEMENT OF SENSING DEVICES IN THE IMMEDIATE PATH OF AN AIR DUCT OUTLET. IN GENERAL, THE LOCATIONS ARE INTENDED TO ACCURATELY REPRESENT THE INTERIOR PASSENGER AREA.**

Additional testing shall be performed as necessary to ensure compliance to performance requirements stated herein.

BASE

Capacity and Performance Requirements

The air-conditioning portion of the HVAC system shall be capable of reducing the passenger compartment temperature from 115 to 95 °F in less than 20 minutes after engine start-up. Engine temperature shall be within the normal operating range at the time of start-up of the cool-down test, and the engine speed shall be limited to fast idle, which may be activated by a driver-controlled device. During the cool-down period, the refrigerant pressure shall not exceed safe high-side pressures, and the condenser discharge air temperature, measured 6 in. from the surface of the coil, shall be less than 45 °F above the condenser inlet air temperature. The appropriate solar load as recommended in the APTA "Recommended Instrumentation and Performance Testing for Transit Bus Air Conditioning System," representing 4 p.m. on August 21, shall be used. There shall be no passengers on board, and the doors and windows shall be closed.

BASE

Colder Ambient Conditions

The pull-up requirements for the heating system shall be in accordance with Section 11.1 of APTA's *Recommended Practice* "Transit Bus HVAC System Instrumentation and Performance Testing." With ambient temperature at -20 °F, and vehicle cold soaked at that temperature, the bus heating system shall warm the interior passenger compartment to an average temperature of 70 °F ±2 °F within 70 minutes.

BASE

R134a

The air conditioning system shall meet these performance requirements using R134a. [Note that selection of this refrigerant may impact pull-down performance.]

OPTIONS

TS 53. Controls and Temperature Uniformity

The HVAC system excluding the driver's heater/defroster shall be centrally controlled with an advanced electronic/diagnostic control system with provisions for extracting/reading data. The system shall be compliant with J1939 Communication Protocol for receiving and broadcasting of data.

Hot engine coolant water shall be delivered to the HVAC system driver's defroster/heater and other heater cores by means of an auxiliary coolant pump, sized for the required flow, which is brushless and sealless having a minimum maintenance-free service life for both the brushless motor and the pump of at least 40,000 hours at full power.

BASE

Manual Mode Selection of Climate Control System

After manual selection and/or activation of climate control system operation mode, all interior climate control system requirements for the selected mode shall be attained automatically to within ±2 °F of specified temperature control setpoint.

OPTIONS

BASE

Single Control Setpoint at 70 °F

The temperature control setpoint for the system shall be 70 °F.

OPTIONS

Interior temperature distribution shall be uniform to the extent practicable to prevent hot and/or cold spots. After stabilization with doors closed, the temperatures between any two points in the passenger compartment in the same vertical plane, and 6 to 72 in. above the floor, shall not vary by more than 5 °F with doors closed. The interior temperatures, measured at the same height above the floor, shall not vary

more than ±5 °F from the front to the rear from the average temperature determined in accordance with APTA's "Recommended Instrumentation and Performance Testing for Transit Bus Air Conditioning System." Variations of greater than ±5 °F will be allowed for limited, localized areas provided that the majority of the measured temperatures fall within the specified requirement.

TS 53.1 Auxiliary Heater

BASE

No auxiliary heater.

OPTIONS

TS 54. Air Flow

TS 54.1 Passenger Area

The cooling mode of the interior climate control system shall introduce air into the bus at or near the ceiling height at a minimum rate of 25 cubic ft per minute (cfm) per passenger based on the standard configuration bus carrying a number of passengers equal to 150 percent of the seated load. Airflow shall be evenly distributed throughout the bus, with air velocity not exceeding 100 ft per minute on any passenger. The ventilating mode shall provide air at a minimum flow rate of 20 cfm per passenger.

Airflow may be reduced to 15 cfm per passenger (150 percent of seated load) when operating in the heating mode. The fans shall not activate until the heating element has warmed sufficiently to ensure at least 70 °F air outlet temperature. The heating air outlet temperature shall not exceed 120 °F under any normal operating conditions.

The climate control blower motors and fan shall be designed such that their operation complies with the interior noise level requirements.

BASE

No "Fresh Air" Requirements

To be used by agencies that have an operating profile where the door opening cycle results in effectively providing an adequate "fresh air" mixture.

OPTIONS

TS 54.2 Driver's Area

The bus interior climate control system shall deliver at least 100 cfm of air to the driver's area when operating in the ventilating and cooling modes. Adjustable nozzles shall permit variable distribution or shutdown of the airflow. Airflow in the heating mode shall be reduced proportionally to the reduction of airflow into the passenger area. The windshield defroster unit shall meet the requirements of SAE Recommended Practice J382, "Windshield Defrosting Systems Performance Requirements," and shall have the capability of diverting heated air to the driver's feet and legs. The defroster or interior climate control system shall maintain visibility through the driver's side window.

TS 54.3 Controls for the Climate Control System (CCS)

The controls for the driver's compartment for heating, ventilation and cooling systems shall be integrated and shall meet the following requirements:

- The heat/defrost system fan shall be controlled by a separate switch that has an "off" position and at least two positions for speed control. All switches and controls shall preclude the possibility of clothing becoming entangled, and shields shall be provided, if required. If the fans are approved by the Agency, an "on/off" switch shall be located to the right of or near the main defroster switch.
- A manually operated control valve shall control the coolant flow through the heater core.
- If a cable-operated manual control valve is used, then the cable length shall be kept to a minimum to reduce cable seizing. Heater water control valves shall be "positive" type, closed or open. The method of operating remote valves shall require the concurrence of the Agency project manager.

TS 54.4 Driver's Compartment Requirements

A separate heating, ventilation and defroster system for the driver's area shall be provided and shall be controlled by the driver. The system shall meet the following requirements:

- The heater and defroster system shall provide heating for the driver and heated air to completely defrost and defog the windshield, driver's side window, and the front door glasses in all operating conditions. Fan(s) shall be able to draw air from the bus body interior and/or exterior through a control device and pass it through the heater core to the defroster system and over the driver's feet. A minimum capacity of 100 cfm shall be provided. The driver shall have complete control of the heat and fresh airflow for the driver's area.
- The defroster supply outlets shall be located at the lower edge of the windshield. These outlets shall be durable and shall be free of sharp edges that can catch clothes during normal daily cleaning. The system shall be such that foreign objects such as coins or tickets cannot fall into the defroster air outlets. Adjustable ball vents or louvers shall be provided at the left of the driver's position to allow direction of air onto the side windows.

A ventilation system shall be provided to ensure driver comfort and shall be capable of providing fresh air in both the foot and head areas. Vents shall be controllable by the driver from the normal driving position. Decals shall be provided, indicating "operating instructions" and "open" and "closed" positions. When closed, vents shall be sealed to prevent the migration of water or air into the bus.

TS 54.5 Driver's Cooling

BASE

No dedicated evaporator.

TS 55. Air Filtration

Air shall be filtered before entering the AC system and being discharged into the passenger compartment. The filter shall meet the ANSI/ASHRAE 52.1 requirement for 5 percent or better atmospheric dust spot efficiency, 50 percent weight arrestance, and a minimum dust holding capacity of 120 g per 1000 cfm cell. Air filters shall be easily removable for service.

BASE

Cleanable Filters

Air filters shall be cleanable.

OPTIONS

TS 56. Roof Ventilators

Each ventilator shall be easily opened and closed manually. When open with the bus in motion, this ventilator shall provide fresh air inside the bus. The ventilator shall cover an opening area no less than 425 sq in. and shall be capable of being positioned as a scoop with either the leading or trailing edge open no less than 4 in., or with all four edges raised simultaneously to a height of no less than 3½ in. An escape hatch shall be incorporated into the roof ventilator. Roof ventilator(s) shall be sealed to prevent entry of water when closed.

BASE

Two Roof Ventilators

Two roof ventilators shall be provided in the roof of the bus, one approximately over or just forward of the front axle and the other approximately over the rear axle.

OPTIONS

TS 57. Maintainability

Manually controlled shut-off valves in the refrigerant lines shall allow isolation of the compressor and dehydrator filter for service. To the extent practicable, self-sealing couplings utilizing O-ring seals shall be used to break and seal the refrigerant lines during removal of major components, such as the refrigerant compressor. Shut-off valves may be provided in lieu of self-sealing couplings. The condenser shall be located to efficiently transfer heat to the atmosphere and shall not ingest air warmed above the ambient temperature by the bus mechanical equipment, or to discharge air into any other system of the bus. The location of the condenser shall preclude its obstruction by wheel splash, road dirt or debris. HVAC components located within 6 in. of floor level shall be constructed to resist damage and corrosion.

BASE

High and low refrigerant pressure readings accessed via diagnostics within HVAC HMI

NOTE: The Agency may include the following sections if an alternative for colder ambient performance is specified above.

TS 58. Entrance/Exit Area Heating

BASE

No requirements for entrance/exit area heating.

OPTIONS

TS 59. Floor-Level Heating

TS 59.1 Transit Coach

BASE

No requirements for floor-level heating.

OPTIONS

EXTERIOR PANELS, FINISHES AND EXTERIOR LIGHTING

TS 60. Design

The bus shall have a clean, smooth, simple design, primarily derived from bus performance requirements and passenger service criteria. The exterior and body features, including grilles and louvers, shall be shaped to facilitate cleaning by automatic bus washers without snagging washer brushes. Water and dirt shall not be retained in or on anybody feature to freeze or bleed out onto the bus after leaving the washer. The body and windows shall be sealed to prevent leaking of air, dust or water under normal operating conditions and during cleaning in automatic bus washers for the service life of the bus.

Exterior panels shall be sufficiently stiff to minimize vibration, drumming or flexing while the bus is in service. When panels are lapped, the upper and forward panels shall act as a watershed. However, if entry of moisture into the interior of the vehicle is prevented by other means, then rear cap panels may be lapped otherwise. The windows, hatches and doors shall be able to be sealed. Accumulation of spray and splash generated by the bus's wheels shall be minimized on windows and mirrors.

TS 60.1 Materials

Body materials shall be selected and the body fabricated to reduce maintenance, extend durability and provide consistency of appearance throughout the service life of the bus. Detailing shall be kept simple, and add-on devices and trim shall be minimized and integrated into the basic design.

BASE

No requirement for protection against graffiti/vandalism for body material surfaces.

OPTIONS

TS 60.2 Roof-Mounted Equipment (Transit Coach)

A non-skid, clearly marked walkway or steps shall be incorporated on the roof to provide access to equipment without damaging any system or bus paneling.

TS 61. Pedestrian Safety

Exterior protrusions along the side and front of the bus greater than ½ in. and within 80 in. of the ground shall have a radius no less than the amount of the protrusion. The exterior rearview mirrors, cameras and required lights and reflectors are exempt from the protrusion requirement. Advertising frames shall

protrude no more than ⅞ in. from the body surface. Grilles, doors, bumpers and other features on the sides and rear of the bus shall be designed to minimize toeholds or handholds.

Exterior protrusions shall not cause a line-of-sight blockage for the driver.

TS 62. Repair and Replacement

TS 62.1 Side Body Panels (Transit Coach)

Structural elements supporting exterior body panels shall allow side body panels below the windows to be repaired in lengths not greater than 12.5 ft.

BASE

Easily Repairable Fiberglass Lower Side Body Panels

The lower section (approximately 17.5 in.) of the side body panels (low-floor buses) or skirt panels (high-floor buses) shall be made of impact-resistant material and shall be easily and easily repairable.

TS 63. Rain Gutters

Rain gutters shall be provided to prevent water flowing from the roof onto the passenger doors and driver's side window. When the bus is decelerated, the gutters shall not drain onto the windshield, driver's side window or door boarding area. Cross sections of the gutters shall be adequate for proper operation.

TS 64. License Plate Provisions

Provisions shall be made to mount standard-size U.S./Canada license plates per SAE J686 on the front and rear of the bus. These provisions shall direct-mount or recess the license plates so that they can be cleaned by automatic bus-washing equipment without being caught by the brushes. The rear license plate provision shall be illuminated per SAE J587.

BASE

No plate or holder provision is required.

OPTIONS

TS 64.1 Rub rails

BASE

No requirement for rub rails.

TS 65. Fender Skirts

BASE

Features to minimize water spray from the bus in wet conditions shall be included in wheel housing design. Any fender skirts shall be easily replaceable. They shall be flexible if they extend beyond the allowable body width. Wheels and tires shall be removable with the fender skirts in place.

OPTIONS

TS 66. Wheel Covers (Transit Coach)

BASE

Wheel covers not required.

OPTIONS

TS 66.1 Splash Aprons

BASE

Standard Splash Aprons

Splash aprons, composed of ¼ in. minimum composition or rubberized fabric, shall be installed behind and/or in front of wheels as needed to reduce road splash and to protect under floor components. The splash aprons shall extend downward to within 6 in. off the road surface at static conditions. Apron widths shall be no less than tire widths. Splash aprons shall be bolted to the bus understructure. Splash aprons and their attachments shall be inherently weaker than the structure to which they are attached. The flexible portions of the splash aprons shall not be included in the road clearance measurements. Splash apron shall be installed as necessary to protect the wheelchair loading device from road splash. Other splash aprons shall be installed where necessary to protect bus equipment.

OPTIONS

TS 67. Service Compartments and Access Doors

TS 67.1 Access Doors (Transit Coach)

Conventional or pantograph hinged doors shall be used for the engine compartment and for all auxiliary equipment compartments, including doors for checking the quantity and adding to the engine coolant, engine lubricant and transmission fluid. Access openings shall be sized for easy performance of tasks within the compartment, including tool operating space. Access doors shall be of rugged construction and shall maintain mechanical integrity and function under normal operations throughout the service life of the bus. They shall close flush with the body surface. All doors shall be hinged at the top or on the forward edge and shall be prevented from coming loose or opening during transit service or in bus washing operations. All access doors shall be retained in the open position by props or counterbalancing with over-center or gas-filled springs with safety props and shall be easily operable by one person. Springs and hinges shall be corrosion resistant. Latch handles shall be flush with, or recessed behind, the body contour and shall be sized to provide an adequate grip for opening. Access doors, when opened, shall not restrict access for servicing other components or systems.

If precluded by design, the manufacturer shall provide door design information specifying how the requirements are met.

TS 67.2 Access Door Latch/Locks

BASE

Requirement for Latches on Access Doors

Access doors larger than 100 sq in. in area shall be equipped with corrosion-resistant flush-mounted latches or locks except for coolant and fuel fill access doors. All such access doors that require a tool to open shall be standardized throughout the vehicle and will require a nominal 5/16 in. square male tool to open or lock.

TS 68. Bumpers

TS 68.1 Location

Bumpers shall provide impact protection for the front and rear of the bus with the top of the bumper being 27 in., ±2 in., above the ground. Bumper height shall be such that when one bus is parked behind another, a portion of the bumper faces will contact each other.

TS 68.2 Front Bumper

No part of the bus, including the bumper, shall be damaged as a result of a 5 mph impact of the bus at curb weight with a fixed, flat barrier perpendicular to the bus's longitudinal centerline. The bumper shall return to its pre-impact shape within 10 minutes of the impact. The bumper shall protect the bus from damage as a result of 6.5 mph impacts at any point by the common carriage with contoured impact surface defined in Figure 2 of FMVSS 301 loaded to 4000 lbs parallel to the longitudinal centerline of the bus. It shall protect the bus from damage as a result of 5.5 mph impacts into the corners at a 30 deg angle to the longitudinal centerline of the bus. The energy absorption system of the bumper shall be independent of every power system of the bus and shall not require service or maintenance in normal operation during the service life of the bus. The bumper may increase the overall bus length specified by no more than 7 in.

BASE

No provisions for installing a bike rack shall be made.

OPTIONS

TS 68.3 Rear Bumper

No part of the bus, including the bumper, shall be damaged as a result of a 2 mph impact with a fixed, flat barrier perpendicular to the longitudinal centerline of the bus. The bumper shall return to its pre-impact shape within 10 minutes of the impact. When using a yard tug with a smooth, flat plate bumper 2 ft wide contacting the horizontal centerline of the rear bumper, the bumper shall provide protection at speeds up to 5 mph, over pavement discontinuities up to 1 in. high, and at accelerations up to 2 mph/sec. The rear bumper shall protect the bus when impacted anywhere along its width by the common carriage with contoured impact surface defined in Figure 2 of FMVSS 301 loaded to 4000 lbs, at 4 mph parallel to or up to a 30 deg angle to the longitudinal centerline of the bus. The rear bumper shall be shaped to preclude unauthorized riders standing on the bumper. The bumper shall not require service or maintenance in normal operation during the service life of the bus. The bumper may increase the overall bus length specified by no more than 7 in.

TS 68.4 Bumper Material

Bumper material shall be corrosion-resistant and withstand repeated impacts of the specified loads without sustaining damage. These bumper qualities shall be sustained throughout the service life of the bus.

TS 69. Finish and Color

TS 69.1 Appearance

All exterior surfaces shall be smooth and free of wrinkles and dents. Exterior surfaces to be painted shall be properly prepared as required by the paint system Supplier prior to application of paint to ensure a proper bond between the basic surface and successive coats of original paint for the service life of the bus. Drilled holes and cutouts in exterior surfaces shall be made prior to cleaning, priming and painting, where possible, to prevent corrosion. The bus shall be painted prior to installation of exterior lights, windows, mirrors and other items that are applied to the exterior of the bus. Body filler materials may be used for surface dressing, but not for repair of damaged or improperly fitted panels.

Paint shall be applied smoothly and evenly with the finished surface free of visible dirt and the following other imperfections:

- blisters or bubbles appearing in the topcoat film
- chips, scratches or gouges of the surface finish
- cracks in the paint film
- craters where paint failed to cover due to surface contamination
- overspray
- peeling
- runs or sags from excessive flow and failure to adhere uniformly to the surface
- chemical stains and water spots
- dry patches due to incorrect mixing of paint activators
- buffing swirls

All exterior finished surfaces shall be impervious to diesel fuel, gasoline and commercial cleaning agents. Finished surfaces shall resist damage by controlled applications of commonly used graffiti-removing chemicals.

Proper adhesion between the basic surface and successive coats of the original paint shall be measured using an elcometer adhesion tester as outlined in ASTM D4541-85. Adhesion shall be a minimum 300 ft-lbs. The bus manufacturer shall supply test samples of the exterior surface for each step of the painting process that may be subject to adhesion testing per ASTM G4541-87 and ASTM D4145-85. ASTM D4541-93 may be used for inspection testing during assembly of the vehicle.

BASE

The Paint shall be DuPont ® Imron Elite (or approved equal)

Appearance Zones

Zone	Description
1	Sides - From below drip rail to top of wheel wells - (Entrance/Exit doors Included) Front mask - From bottom of destination sign enclosure down to bottom of windshields Rear - From below drip rail to top of zone 2
2	Sides - From top of wheel wells to bottom of panels (access doors Included) Front - bottom of windshields to top of front bumper Rear - Bottom 15" of engine door and corner pillars
3	Roof sides - drip rail up to top of roof side Front mask - bottom of destination sign enclosure to top of mask Rear - Top 14.5" of rear crown/door
4	Top of roof panels
5	Wheel Rims and painted chassis - visible

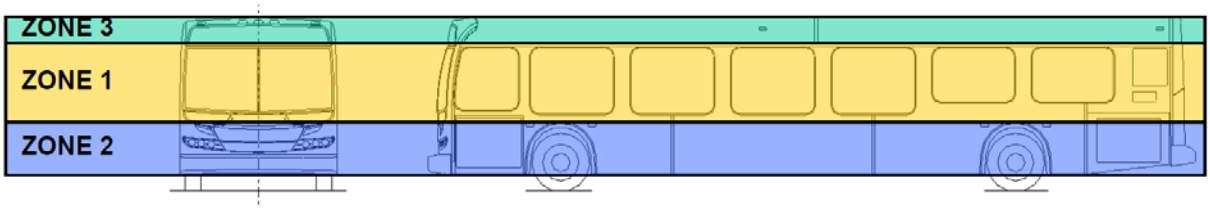

Solids Gloss
using a multi angle observer

Zone	Requirements
1	80 units +
2	80 units +
3	80 units +
4	70 units
5	N/A

Flat Black Gloss - All Int/Ext Parts
using a 60° observer

Zone	Requirements
1	17units +/-4
2	17units +/-4
3	17units +/-4
4	17units +/-4
5	N/A

Orange Peel

Zone	Requirements
1	≥ 3.5
2	≥ 3.5
3	≥ 3.5
4	≥ 3.0
5	N/A

The dry film thickness (DFT) will be the sum of coatings applied as per recommended DFT as supplied by DuPont ® which is .003" - .020" or 3 – 20 Mils or approved equal

BASE

The bus shall be the manufacturer's basic white bus, with no clear coat and no customer specific exterior decals such as agency logos. Fleet number & Safety decals are still required.

OPTIONS

NOTE: The Agency should insert color scheme and graphics.

TS 70. Decals, Numbering and Signing

Monograms, numbers and other special signing shall be applied to the inside and outside of the bus as required. Signs shall be durable and fade-, chip- and peel-resistant. They may be painted signs, decals or pressure-sensitive appliqués. All decals shall be installed per the decal Supplier recommendations. Signs shall be provided in compliance with the ADA requirements defined in 49 CFR Part 38, Subpart B, 38.27.

NOTE: The Agency should supply a list of interior and exterior decals including size and location.

TS 70.1 Passenger Information

ADA priority seating signs as required and defined by 49 CFR shall be provided to identify the seats designated for passengers with disabilities.

Requirements for a public information system in accordance with 49 CFR shall be provided.

TS 71. Exterior Lighting

All exterior lights shall be designed to prevent entry and accumulation of moisture or dust. Lamps, lenses and fixtures shall be interchangeable to the extent practicable. Two hazard lamps at the rear of the bus shall be visible from behind when the engine service doors are opened. Light lenses shall be designed and located to prevent damage when running the vehicle through an automatic bus washer.

BASE

Commercially available LED-type lamps shall be utilized at all exterior lamp locations.

OPTIONS

BASE

Standard Size

Size of LED lamps used for tail, brake and turn signal lamps shall be standard installation of OEM.

OPTIONS

BASE

Front marker (clearance) lights along with lights located on the roof and sides of the bus shall have protective shields or be of the flush mount type to protect the lens against minor impacts.

TS 71.1 Backup Light/Alarm

Visible and audible warnings shall inform following vehicles or pedestrians of reverse operation. Visible reverse operation warning shall conform to SAE Standard J593. Audible reverse operation warning shall conform to SAE Recommended Practice J994 Type C or D.

TS 71.2 Doorway Lighting

Lamps at the front and rear passenger doorways (if applicable) shall comply with ADA requirements and shall activate only when the doors open. These lamps shall illuminate the street surface to a level of no less than 1 foot-candle for a distance of 3 ft outward from the outboard edge of the door threshold. The lights may be positioned above or below the lower daylight opening of the windows and shall be shielded to protect passengers' eyes from glare.

TS 71.3 Turn Signals

BASE

Standard Turn Signals

Turn-signal lights shall be provided on the front, rear, curb and street sides of the bus in accordance with federal regulations.

OPTIONS

TS 71.4 Headlights

Headlamps shall be designed for ease of replacement.

BASE

LED

Headlamps shall be LED/halogen, sealed beam.

TS 71.5 Brake Lights

TS 71.5.1 Transit Coach

Brake lights shall be provided in accordance with federal regulations.

BASE

High and Center Mount Red Brake Lamp

Bus shall include red, high and center mount brake lamp(s) along the backside of the bus in addition to the lower brake lamps required under FMVSS. The high and center mount brake lamp(s) shall illuminate steadily with brake application. Agency to specify the size of the high and center mount brake lamp(s).

TS 71.6 Service Area Lighting (Interior and Exterior)

LED lamps shall be provided in the engine and all other compartments where service may be required to generally illuminate the area for night emergency repairs or adjustments. These service areas shall include, but not be limited to, the engine compartment, the communication box, junction/apparatus panels and passenger door operator compartments. Lighting shall be adequate to light the space of the service areas to levels needed to complete typical emergency repairs and adjustments. The service area lamps shall be suitable for the environment in which they are mounted.

Engine compartment lamps shall be controlled by a switch mounted near the rear start controls. All other service area lamps shall be controlled by switches mounted on or convenient to the lamp assemblies. Power to the service area lighting shall be programmable. Power shall latch on with activation of the switch and shall be automatically discontinued (timed out) after 30 minutes to prevent damage caused by inadvertently leaving the service area lighting switch in the “on” position after repairs are made.

INTERIOR PANELS AND FINISHES

TS 72. General Requirements

Materials shall be selected on the basis of maintenance, durability, appearance, safety, flammability and tactile qualities. Materials shall be strong enough to resist everyday abuse and be vandalism and corrosion resistant. Trim and attachment details shall be kept simple and unobtrusive. Interior trim shall be secured to avoid resonant vibrations under normal operational conditions.

Interior surfaces more than 10 in. below the lower edge of the side windows or windshield shall be shaped so that objects placed on them fall to the floor when the coach is parked on a level surface. Any components and other electrical components within close proximity to these surfaces shall also be resistant to this cleaning method.

BASE

No requirement for anti-graffiti/vandalism surface treatments.

OPTIONS

TS 73. Interior Panels

Panels shall be easily replaceable and tamper resistant. They shall be reinforced, as necessary, to resist vandalism and other rigors of transit bus service. Individual trim panels and parts shall be interchangeable to the extent practicable.

BASE

Interior panel required to meet FMVSS 302.

OPTIONS

TS 73.1 Driver Area Barrier

TS 73.1.1 Transit Coach

A barrier or bulkhead between the driver and the street-side front passenger seat shall be provided. The barrier shall minimize glare and reflections in the windshield directly in front of the barrier from interior lighting during night operation. Location and shape must permit full seat travel and reclining possibilities that can accommodate the shoulders of a 95th-percentile male. The partition shall have a side return and stanchion to prevent passengers from reaching the driver by standing behind the driver's seat. The lower area between the seat and panel must be accessible to the driver. The partition must be strong enough in conjunction with the entire partition assembly for mounting of such equipment as flare kits, fire extinguishers (1.2 kg), microcomputer, public address amplifier, etc. The panel should be properly attached to minimize noise and rattles.

BASE

Wheel-Well-to-Ceiling Configuration of Driver's Barrier

The driver's barrier shall extend from the top of the wheel well to the ceiling the level of the seated driver and shall fit close to the bus side windows and wall to prevent passengers from reaching the driver or the driver's personal effects.

TS 73.2 Modesty Panels

Sturdy divider panels constructed of durable, unpainted, corrosion-resistant material complementing the interior shall be provided to act as both a physical and visual barrier for seated passengers.

Design and installation of modesty panels located in front of forward-facing seats shall include a handhold or grab handle along its top edge. These dividers shall be mounted on the sidewall and shall project toward the aisle no farther than passenger knee projection in longitudinal seats or the aisle side of the transverse seats. Modesty panels shall extend from at least the window opening of the side windows, and those forward of transverse seats shall extend downward to 1 and 1½ in. above the floor. Panels forward of longitudinal seats shall extend to below the level of the seat cushion. Dividers positioned at the doorways, where applicable, shall provide no less than a 2½ in. clearance between the modesty panel and a fully open, inward opening door, or the path of a deploying flip-out ramp to protect passengers from being pinched. Modesty panels installed at doorways shall be equipped with grab rails if passenger assists are not provided by other means.

The modesty panel and its mounting shall withstand a static force of 250 lbs applied to a 4 × 4 in. area in the center of the panel without permanent visible deformation.

BASE

Modesty panels shall be installed as stated.

TS 73.3 Front End

The entire front end of the bus shall be sealed to prevent debris accumulation behind the dash and to prevent the driver's feet from kicking or fouling wiring and other equipment. The front end shall be free

of protrusions that are hazardous to passengers standing at the front of the standee line area of the bus during rapid decelerations. Paneling across the front of the bus and any trim around the driver's compartment shall be formed metal or composite material. Composite dash panels shall be reinforced as necessary, vandal-resistant and replaceable. All colored, painted and plated parts forward of the driver's barrier shall be finished with a surface that reduces glare. Any mounted equipment must have provision to support the weight of equipment.

TS 73.4 Rear Bulkhead

The rear bulkhead and rear interior surfaces shall be material suitable for exterior skin; painted and finished to exterior quality; or paneled with melamine-type material, composite, scratch-resistant plastic or carpeting and trimmed with stainless steel, aluminum or composite.

The rear bulkhead paneling shall be contoured to fit the ceiling, side walls and seat backs so that any litter or trash will tend to fall to the floor or seating surface when the bus is on a level surface. Any air vents in this area shall be louvered to reduce airflow noise and to reduce the probability of trash or liter being thrown or drawn through the grille. If it is necessary to remove the panel to service components located on the rear bulkhead, then the panel shall be hinged or shall be able to be easily removed and replaced. Grilles where access to or adjustment of equipment is required shall be heavy duty and designed to minimize damage and limit unauthorized access.

TS 73.5 Headlining

Ceiling panels shall be made of durable, corrosion resistant, easily cleanable material. Headlining shall be supported to prevent buckling, drumming or flexing and shall be secured without loose edges. Headlining materials shall be treated or insulated to prevent marks due to condensation where panels are in contact with metal members. Moldings and trim strips, as required to make the edges tamperproof, shall be stainless steel, aluminum or plastic, colored to complement the ceiling material. Headlining panels covering operational equipment that is mounted above the ceiling shall be on hinges for ease of service but retained to prevent inadvertent opening.

TS 73.6 Fastening

Interior panels shall be attached so that there are no exposed unfinished or rough edges or rough surfaces. Fasteners should be corrosion resistant. Panels and fasteners shall not be easily removable by passengers. Exposed interior fasteners should be minimized, and where required shall be tamper resistant.

TS 73.7 Insulation

Any insulation material used between the inner and outer panels shall minimize the entry and/or retention of moisture. Insulation properties shall be unimpaired during the service life of the bus. Any insulation material used inside the engine compartment shall not absorb or retain oils or water and shall be designed to prevent casual damage that may occur during maintenance operations.

The combination of inner and outer panels on the sides, roof, wheel wells and ends of the bus, and any material used between these panels, shall provide a thermal insulation sufficient to meet the interior temperature requirements. The bus body shall be thoroughly sealed so that the driver or passengers cannot feel drafts during normal operations with the passenger doors closed.

BASE

FMVSS 302

Insulation shall meet the requirements of FMVSS 302.

OPTIONS

TS 73.8 Floor Covering

The floor covering shall have a non-skid walking surface that remains effective in all weather conditions. The floor covering, as well as transitions of flooring material to the main floor and to the entrance and exit area, shall be smooth and present no tripping hazards. Seams shall be sealed/welded per manufacturer's specifications. The standee line shall be approximately 2 in. wide and shall extend across the bus aisle. The color and pattern shall be consistent throughout the floor covering.

Any areas on the floor that are not intended for standees, such as areas "swept" during passenger door operation, shall be clearly and permanently marked.

The floor shall be easily cleaned and shall be arranged to minimize debris accumulation.

A one-piece center strip shall extend from the vertical wall of the rear settee between the aisle sides of transverse seats to the standee line. If the floor is of a bi-level construction, then the center strip shall be one piece at each level. The covering between the center strip and the wheel housings may be separate pieces. At the rear door, however, a separate strip as wide as the door shall extend from the center strip to the outboard edge of the rear/exit area.

The floor under the seats shall be covered with smooth surface flooring material. The floor covering shall closely fit the sidewall in a fully sealed butt joint or extend to the top of the cove.

TS 73.9 Interior Lighting

The light source shall be located to minimize windshield glare, with distribution of the light focused primarily on the passengers' reading plane while casting sufficient light onto the advertising display. The lighting system may be designed to form part of or the entire air distribution duct.

The lens material shall be translucent polycarbonate. Lenses shall be designed to effectively "mask" the light source. Lenses shall be sealed to inhibit incursion of dust and insects yet be easily removable for service. Access panels shall be provided to allow servicing of components located behind light panels. If necessary, the entire light fixture shall be hinged.

TS 73.10 Passenger

BASE

First Row Lights

The first light on each side (behind the driver and the front door) is normally turned on only when the front door is opened, in "night run" and "night park." As soon as the door closes, these lights shall go out. These lights shall be turned on at any time if the switch is in the "on" position.

OPTIONS

All interior lighting shall be turned off whenever the transmission selector is in reverse and the engine run switch is in the "on" position.

The interior lighting design shall require the approval of the Agency.

DEFAULT

LED lights.

DEFAULT

First Light Modules Dim/Extinguish When Front Door is Closed

When the master switch is in the “run” or “night/run” mode, the first light module on each side of the coach shall automatically extinguish or dim when the front door is in the closed position and illuminate when the door is opened.

OPTIONS

TS 73.11 Driver’s Area

The driver’s area shall have a light to provide general illumination, and it shall illuminate the half of the steering wheel nearest the driver to a level of 5 to 10 foot-candles.

TS 73.12 Seating Areas (Transit Coach)

The interior lighting system shall provide a minimum 15 foot-candle illumination on a 1 sq ft plane at an angle of 45 degrees from horizontal, centered 33 in. above the floor and 24 in. in front of the seat back at each seat position. Allowable average light level for the rear bench seats shall be 7 foot-candles.

TS 73.13 Vestibules/Doors (Transit Coach)

Floor surface in the aisles shall be a minimum of 10 foot-candles, and the vestibule area a minimum of 4 foot-candles with the front doors open and a minimum of 2 foot-candles with the front doors closed. The front entrance area and curb lights shall illuminate when the front door is open and master run switch is in the “lights” positions. Rear exit area and curb lights shall illuminate when the rear door is unlocked.

TS 73.14 Step Lighting

Step lighting for the intermediate steps between lower and upper floor levels shall be a minimum of 4 foot-candles and shall illuminate in all engine run positions. The step lighting shall be low profile to minimize tripping and snagging hazards for passengers and shall be shielded as necessary to protect passengers’ eyes from glare.

TS 73.15 Ramp Lighting (Transit Coach)

Exterior and interior ramp lighting shall comply with federal regulations.

TS 73.16 Turntable Lighting (Articulated Coach)

Lighting in the turntable can be reduced to 7 foot-candles.

TS 73.17 Farebox Lighting

TS 73.17.1 Transit Coach

BASE

Farebox Light

A light fixture shall be mounted in the ceiling above the farebox location. The fixture shall be capable of projecting a concentrated beam of light on the farebox. This light will automatically come on whenever the front doors are opened and the run switch is in the “night run” or “night park” position.

OPTIONS

TS 74. Fare Collection

Space and structural provisions shall be made for installation of currently available fare collection devices, which shall be as far forward as practicable. Location of the fare collection device shall not restrict traffic in the vestibule, including wheelchairs if a front door loading device is used, and shall allow the driver to easily reach the farebox controls and to view the fare register. The farebox shall not restrict access to the driver area, shall not restrict operation of driver controls and shall not—either by itself or in combination with stanchions, transfer mounting, cutting and punching equipment, or route destination signs—restrict the driver’s field of view per SAE Recommended Practice J1050. The location and mounting of the fare collection device shall allow use, without restriction, by passengers. The farebox location shall permit accessibility to the vault for easy manual removal or attachment of suction devices. Meters and counters on the farebox shall be readable on a daily basis. The floor under the farebox shall be reinforced as necessary to provide a sturdy mounting platform and to prevent shaking of the farebox.

Contractor shall provide fare collection installation layout to the Agency for approval.

Transfer mounting, cutting and punching equipment shall be located in a position convenient to the driver.

BASE

Agency will install its own farebox.

OPTIONS

TS 75. Interior Access Panels and Doors (Transit Coach)

Access for maintenance and replacement of equipment shall be provided by panels and doors that appear to be an integral part of the interior. Access doors shall be hinged with gas props or over-center springs, where practical, to hold the doors out of the mechanic’s way. Panels shall prevent entry of mechanism lubricant into the bus interior. All fasteners that retain access panels shall be captive in the cover.

BASE

Access Doors that Do Not Require Tools or Keys to Open

Access doors shall be secured with hand screws or latches. All fasteners that retain access panels shall be captive in the cover.

OPTIONS

TS 75.1 Floor Panels

Access openings in the floor shall be sealed to prevent entry of fumes and water into the bus interior. Flooring material at or around access openings shall be flush with the floor and shall be edge-bound with stainless steel or another material that is acceptable to the Agency to prevent the edges from coming loose. Access openings shall be asymmetrical so that reinstalled flooring shall be properly aligned. Fasteners shall tighten flush with the floor.

The number of special fastener tools required for panel and access door fasteners shall be minimized.

PASSENGER ACCOMMODATIONS

TS 76. Passenger Seating

TS 76.1 Arrangements and Seat Style (Transit Coach)

The passenger seating arrangement in the bus shall be such that seating capacity is maximized and in compliance to the following requirements.

> **NOTE:** The Agency recognizes that ramp location, foot room, hip-to-knee room, doorway type, width, seat construction, floor level type, seat spacing requirements, ramp or lift, number of wheelchair positions, etc. ultimately affect seating capacity and layout.

BASE

Forward-Facing Seat Configuration

Passenger seats shall be arranged in a transverse, forward-facing configuration, except at the wheel housings and turntable, if applicable, where aisle-facing seats may be arranged as appropriate with due regard for passenger access and comfort. Other areas where aisle-facing seats may be provided are at wheelchair securement areas and platforms (such as for fuel tank storage space).

OPTIONS

TS 76.2 Rearward Facing Seats (Transit Coach)

BASE

Rearward facing seats not allowed.

OPTIONS

TS 76.3 Turntable Seating (Articulated Coach)

BASE

Handholds or leaning rail.

OPTIONS

TS 76.4 Padded Inserts/Cushioned Seats (Transit Coach)

BASE

Non-Padded Inserts

The passenger seats shall be equipped with non-padded inserts throughout the bus.

OPTIONS

BASE

Non-Padded Seat Configuration

The seat back thickness shall not exceed 1 in. in the knee room area.

OPTIONS

TS 76.5 Drain Hole in Seats

BASE

No requirements for drain hole provision in seat inserts.

OPTIONS

TS 76.6 Hip-to-Knee Room

Hip-to-knee room measured from the center of the seating position, from the front of one seat back horizontally across the highest part of the seat to a vertical surface immediately in front, shall be a minimum of 26 in. At all seating positions in paired transverse seats immediately behind other seating positions, hip-to-knee room shall be no less than 27 in.

TS 76.7 Foot Room

Foot room, measured at the floor forward from a point vertically below the front of the seat cushion, shall be no less than 14 in. Seats immediately behind the wheel housings and modesty panels may have foot room reduced.

TS 76.8 Aisles (Transit Coach)

The aisle between the seats shall be no less than 20 in. wide at seated passenger hip height. Seat backs shall be shaped to increase this dimension to no less than 24 in. at 32 in. above the floor (standing passenger hip height).

TS 76.9 Aisles (Commuter Coach)

The aisle between the seats shall be no less than 14 in. wide at seated passenger hip height.

TS 76.10 Dimensions (Transit Coach)

FIGURE 6
Seating Dimensions and Standard Configuration

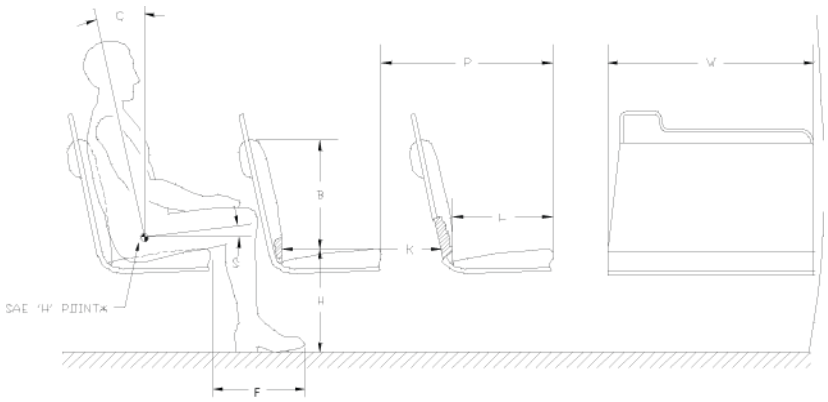

BASE

Seat dimensions for the various seating arrangements shall have the dimensions as follows (refer to **Figure 6**):

- The width, W, of the two-passenger transverse seat shall be a minimum 35 in.
- The length, L, shall be 17 in., ±1 in.
- The seat back height, B, shall be a minimum of 15 in.
- The seat height, H, shall be 17 in., ± 1 in. For the rear lounge (or settee) and longitudinal seats, and seats located above raised areas for storage of under-floor components, a cushion height of up to 18 in., ±2 in., will be allowed. This shall also be allowed for limited transverse seats, but only with the expressed approval of the Agency.
- Foot room = F.
- The seat cushion slope, S, shall be between 5 and 11 deg.
- The seat back slope, C, shall be between 8 and 17 deg.
- Hip to knee room = K.
- The pitch, P, is shown as reference only.

TS 76.11 Structure and Design (Transit Coach)

The passenger seat frame and its supporting structure shall be constructed and mounted so that space under the seat is maximized and is completely free of obstructions to facilitate cleaning.

Seats, structures and restraints around the securement area should not infringe into the mobility device envelope or maneuverability.

The transverse seat structure shall be fully cantilevered from the sidewall with sufficient strength for the intended service. The lowest part of the seat assembly that is within 12 in. of the aisle shall be at least 10 in. above the floor.

In locations at which cantilevered installation is precluded by design and/or structure, other seat mounting may be allowed.

All transverse objects—including seat backs, modesty panels, and longitudinal seats—in front of forward-facing seats shall not impart a compressive load in excess of 1000 lbs onto the femur of passengers

ranging in size from a 5th-percentile female to a 95th-percentile male during a 10g deceleration of the bus. This deceleration shall peak at 0.05 to 0.015 seconds from initiation. Permanent deformation of the seat resulting from two 95th-percentile males striking the seat back during this 10g deceleration shall not exceed 2 in., measured at the aisle side of the seat frame at height H. The seat back should not deflect more than 14 in., measured at the top of the seat back, in a controlled manner to minimize passenger injury. Structural failure of any part of the seat or sidewall shall not introduce a laceration hazard.

The seat assembly shall withstand static vertical forces of 500 lbs applied to the top of the seat cushion in each seating position with less than ¼ in. permanent deformation in the seat or its mountings. The seat assembly shall withstand static horizontal forces of 500 lbs evenly distributed along the top of the seat back with less than ¼ in. permanent deformation in the seat or its mountings. The seat backs at the aisle position and at the window position shall withstand repeated impacts of two 40-lb sandbags without visible deterioration. One sandbag shall strike the front 40,000 times and the other sandbag shall strike the rear 40,000 times. Each sandbag shall be suspended on a 36 in. pendulum and shall strike the seat back 10,000 times each from distances of 6, 8, 10 and 12 in. Seats at both seating positions shall withstand 4000 vertical drops of a 40-lb sandbag without visible deterioration. The sandbag shall be dropped 1000 times each from heights of 6, 8, 10 and 12 in. Seat cushions shall withstand 100,000 randomly positioned 3½ in. drops of a squirming, 150-lb, smooth-surfaced, buttocks-shaped striker with only minimal wear on the seat covering and no failures to seat structure or cushion suspension components.

The back of each transverse seat shall incorporate a handhold no less than ⅞ in. in diameter for standees and seat access/egress. The handhold shall not be a safety hazard during severe decelerations. The handhold shall extend above the seat back near the aisle so that standees shall have a convenient vertical assist, no less than 4 in. long that may be grasped with the full hand. This handhold shall not cause a standee using this assist to interfere with a seated 50th-percentile male passenger. The handhold shall also be usable by a 5th-percentile female, as well as by larger passengers, to assist with seat access/egress for either transverse seating position. The upper rear portion of the seat back and the seat back handhold immediately forward of transverse seats shall be padded and/or constructed of energy-absorbing materials. During a 10g deceleration of the bus, the HIC number (as defined by SAE Standard J211a) shall not exceed 400 for passengers ranging in size from a 5th percentile female through a 95th percentile male.

The seat back handhold may be deleted from seats that do not have another transverse seat directly behind and where a vertical assist is provided.

Longitudinal seats shall be the same general design as transverse seats but without seat back handholds. Longitudinal seats may be mounted on the wheelhouses. Armrests shall be included on the ends of each set of longitudinal seats except on the forward end of a seat set that is immediately to the rear of a transverse seat, the driver’s barrier, or a modesty panel, when these fixtures perform the function of restraining passengers from sliding forward off the seat. Armrests are not required on longitudinal seats located in the wheelchair parking area that fold up when the armrest on the adjacent fixed longitudinal seat is within 3½ in. of the end of the seat cushion. Armrests shall be located from 7 to 9 in. above the seat cushion surface. The area between the armrest and the seat cushion shall be closed by a barrier or panel. The top and sides of the armrests shall have a minimum width of 1 in. and shall be free from sharp protrusions that form a safety hazard.

Seat back handhold and armrests shall withstand static horizontal and vertical forces of 250 lbs applied anywhere along their length with less than ¼ in. permanent deformation. Seat back handhold and armrests shall withstand 25,000 impacts in each direction of a horizontal force of 125 lbs with less than ¼ in. permanent deformation and without visible deterioration.

TS 76.12 Construction and Materials (Transit Coach)

Selected materials shall minimize damage from vandalism and shall reduce cleaning time. The seats shall be attached to the frame with tamper-resistant fasteners. Coloring shall be consistent throughout the seat material, with no visually exposed portion painted. Any exposed metal touching the sides or the floor of the bus shall be stainless steel. The seat, pads and cushions shall be contoured for individuality, lateral support and maximum comfort and shall fit the framework to reduce exposed edges.

The minimum radius of any part of the seat back, handhold or modesty panel in the head or chest impact zone shall be a nominal ¼ in. The seat back and seat back handhold immediately forward of transverse seats shall be constructed of energy-absorbing materials to provide passenger protection and, in a severe crash, to allow the passenger to deform the seating materials in the impact areas. Complete seat assemblies shall be interchangeable to the extent practicable.

TS 77. Passenger Assists (Transit Coach)

Passenger assists in the form of full grip, vertical stanchions or handholds shall be provided for the safety of standees and for ingress/egress. Passenger assists shall be convenient in location, shape and size for both the 95th-percentile male and the 5th-percentile female standee. Starting from the entrance door and moving anywhere in the bus and out the exit door, a vertical assist shall be provided either as the vertical portion of the seat back assist or as a separate item so that a 5th-percentile female passenger may easily move from one assist to another using one hand and the other without losing support. All handholds and stanchions at the front doorway, around the farebox, and at interior steps for bi-level designs shall be powder-coated in a high-contrast yellow color.

OPTIONS

TS 77.1 Assists (Transit Coach)

Excluding those mounted on the seats and doors, the assists shall have a cross-sectional diameter between 1¼ and 1½ in. or shall provide an equivalent gripping surface with no corner radii less than ¼ in. All passenger assists shall permit a full hand grip with no less than 1½ in. of knuckle clearance around the assist. Passenger assists shall be designed to minimize catching or snagging of clothes or personal items and shall be capable of passing the NHTSA Drawstring Test.

Any joints in the assist structure shall be underneath supporting brackets and securely clamped to prevent passengers from moving or twisting the assists. Seat handholds may be of the same construction and finish as the seat frame. Door-mounted passenger assists shall be of anodized aluminum, stainless steel or powder-coated metal. Connecting tees and angles may be powder-coated metal castings. Assists shall withstand a force of 300 lbs applied over a 12 in. lineal dimension in any direction normal to the assist without permanent visible deformation. All passenger assist components, including brackets, clamps, screw heads and other fasteners used on the passenger assists shall be designed to eliminate pinching, snagging and cutting hazards and shall be free from burrs or rough edges.

TS 77.2 Front Doorway

Front doors, or the entry area, shall be fitted with ADA-compliant assists. Assists shall be as far outward as practicable, but shall be located no farther inboard than 6 in. from the outside edge of the entrance step and shall be easily grasped by a 5th-percentile female boarding from street level. Door assists shall be functionally continuous with the horizontal front passenger assist and the vertical assist and the assists on the wheel housing or on the front modesty panel.

TS 77.3 Vestibule (Transit Coach)

The aisle side of the driver's barrier, the wheel housings and when applicable the modesty panels shall be fitted with vertical passenger assists that are functionally continuous with the overhead assist and that extend to within 36 in. of the floor. These assists shall have sufficient clearance from the barrier to prevent inadvertent wedging of a passenger's arm.

A horizontal passenger assist shall be located across the front of the bus and shall prevent passengers from sustaining injuries on the fare collection device or windshield in the event of a sudden deceleration. Without restricting the vestibule space, the assist shall provide support for a boarding passenger from the front door through the fare collection procedure. The assist shall be no less than 36 in. above the floor. The assists at the front of the bus shall be arranged to permit a 5th-percentile female passenger to easily reach from the door assist, to the front assist, to vertical assists on the driver's barrier, wheel housings or front modesty panel.

TS 77.4 Rear Doorway(s) (Transit Coach)

Vertical assists that are functionally continuous with the overhead assist shall be provided at the aisle side of the transverse seat immediately forward of the rear door and on the aisle side of the rear door modesty panel(s). Passenger assists shall be provided on modesty panels that are functionally continuous with the rear door assists. Rear doors, or the exit area, shall be fitted with assists having a cross-sectional diameter between 1¼ and 1½ in. or providing an equivalent gripping surface with no corner radii less than ¼ in., and shall provide at least 1½ in. of knuckle clearance between the assists and their mounting. The assists shall be designed to permit a 5th-percentile female to easily move from one assist to another during the entire exiting process. The assists shall be located no farther inboard than 6 in. from the outside edge of the rear doorway step.

> **NOTE:** For an articulated bus, passenger assists will be provided to aid in the transition between the front and rear sections of the bus.

TS 77.5 Overhead (Transit Coach)

Except forward of the standee line and at the rear door, a continuous, full-grip, overhead assist shall be provided. This assist shall be located over the center of the aisle seating position of the transverse seats. The assist shall be no less than 70 in. above the floor.

BASE

No requirements for overhead grab straps/extensions.

OPTIONS

If option available for overhead assists, the shall simultaneously support 150 lbs on any 12 in. length. No more than 5 percent of the full grip feature shall be lost due to assist supports.

TS 77.6 Longitudinal Seat Assists (Transit Coach)

Longitudinal seats shall have vertical assists located between every other designated seating position, except for seats that fold/flip up to accommodate wheelchair securement. Assists shall extend from near the leading edge of the seat and shall be functionally continuous with the overhead assist. Assists shall be staggered across the aisle from each other where practicable and shall be no more than 52 in. apart or functionally continuous for a 5th percentile female passenger.

TS 77.7 Wheel Housing Barriers/Assists (Transit Coach)

Unless passenger seating is provided on top of wheel housings, passenger assists shall be mounted around the exposed sides of the wheel housings (and propulsion compartments if applicable), which shall also be designed to prevent passengers from sitting on wheel housings. Such passenger assists shall also effectively retain items, such as bags and luggage, placed on top of wheel housings.

TS 78. Passenger Doors

TS 78.1 Transit Coach

Doorways will be provided in the locations and styles as follows. Passenger doors and doorways shall comply with ADA requirements.

TS 78.1.1 Front door

BASE

Door shall be forward of the front wheels and under direct observation of the driver.

TS 78.1.2 Rear Door(s)

BASE

Curbside doorway centerline located rearward of the point midway between the front door centerline and the rearmost seat back.

Articulated buses

BASE

Curbside located forward of the rear axle of the trailer section.

OPTIONS

In cases where street-side and curbside doors are chosen, provisions shall be made for operating the front door, curbside rear door(s) and street-side rear door(s) independently or in the combinations shown in **Table 7** while providing positive tactile feedback to the operator identifying the door control selection.

Front	Curbside Rear
Closed	Closed
Open	Closed
Open	Open
Closed	Open

BASE

If air-powered, the door system shall operate per specification at air pressures between 90 and 130 psi.

TS 78.2 Materials and Construction

Structure of the doors, their attachments, inside and outside trim panels and any mechanism exposed to the elements shall be corrosion resistant. Door panel construction shall be of corrosion-resistant metal or reinforced non-metallic composite materials. When fully opened, the doors shall provide a firm support and shall not be damaged if used as an assist by passengers during ingress or egress. Door edges shall be sealed to prevent infiltration of exterior moisture, noise, dirt and air elements from entering the passenger compartment, to the maximum extent possible based on door types.

The closing edge of each door panel shall have no less than 2 in. of soft weather stripping. The doors, when closed, shall be effectively sealed, and the hard surfaces of the doors shall be at least 4 in. apart (not applicable to single doors).The combined weather seal and window glazing elements of the front door shall not exceed 10 deg of binocular obstruction of the driver's view through the closed door.

TS 78.3 Dimensions

TS 78.3.1 Transit Coach

FIGURE 7

Transit Bus Minimum Door Opening

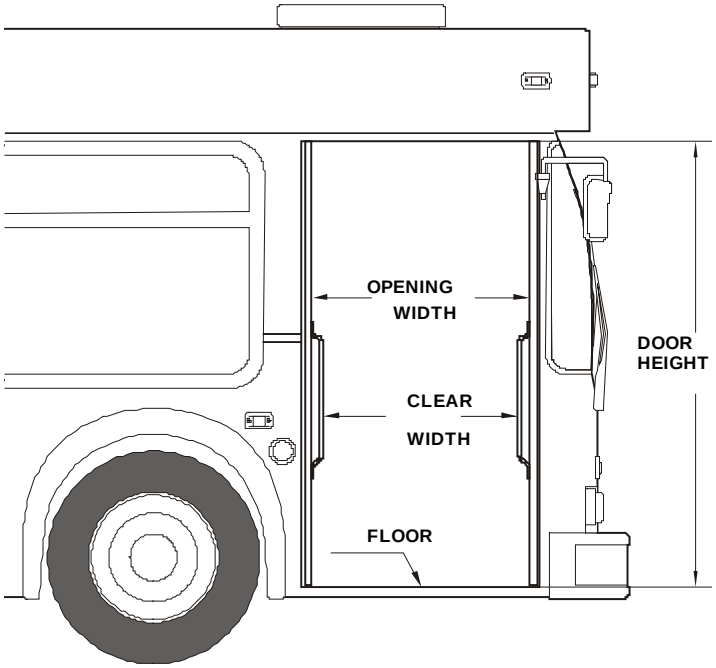

When open, the doors shall leave an opening no less than 75 in. in height.

BASE

31¾ in. Minimum Doorway Clear Width

Front door clear width shall be a minimum of 31¾ in. with the doors fully opened. Rear door opening clear width shall be a minimum of 24 in. with the doors fully opened. If a rear door ramp or lift is provided, then the clear door opening width shall be a minimum of 31¾ in. with door fully opened.

If the Agency requires a minimum rear door clear width of 31¾ in. or greater and an outward opening (swing) door is specified, then the maximum outboard excursion of 13 in. may be exceeded.

TS 78.4 Door Glazing

The upper section of both front and rear doors shall be glazed for no less than 45 percent of the respective door opening area of each section. The lower section of the front door shall be glazed for no less than 25 percent of the door opening area of the section.

Door glazing shall be easily replaceable.

BASE

Zip type glazing rubber.

BASE

The front door panel glazing material shall have a nominal ¼ in. thick laminated safety glass conforming with the requirements of ANSI Z26.1 Test Grouping 2 and the recommended practices defined in SAE J673.

Glazing material in the rear doorway door panels shall be defined by the Agency.

TS 78.5 Door Projection (Transit Coach)

TS 78.5.1 Exterior

The exterior projection of the front doors beyond the side of the bus shall be minimized and shall not block the line of sight of the rear exit door via the curb side mirror when the doors are fully open. The exterior projection of both doors shall be minimized and shall not exceed 14 in. during the opening or closing cycles or when doors are fully opened

TS 78.5.2 Interior

Projection inside the bus shall not cause an obstruction of the rear door mirror or cause a hazard for standees.

TS 78.6 Door Height Above Pavement

It shall be possible to open and close either passenger door when the bus loaded to gross vehicle weight rating is not knelt and parked with the tires touching an 8 in. high curb on a street sloping toward the curb so that the street-side wheels are 5 in. higher than the right-side wheels.

TS 78.7 Closing Force

Closing door edge speed shall not exceed 12 in. per second, and opening door speed shall not exceed 19 in. per second. Power doors shall not slam closed under any circumstance, even if the door is obstructed during the closing cycle. If a door is obstructed during the closing cycle, the pressure exerted on the obstruction shall not increase once initial contact has been made.

Doors closed by a return spring or counterweight-type device shall be equipped with an obstruction-sensing device that, at a minimum, alerts the driver if an obstruction is detected between the closing doors. Doors closed by a return spring or counterweight type device, when unlocked, shall be capable of being pushed to the point where the door starts to open with a force not to exceed 25 lbs applied to the center edge of the forward door panel.

Whether or not the obstruction-sensing system is present or functional, it shall be possible to withdraw a 1½ in. diameter cylinder from between the center edges of a closed and locked door with an outward force not greater than 35 lbs.

TS 78.7.1 Rear Door Closing Force (Transit Coach)

Power-close rear doors shall be equipped with an obstruction-sensing system such that if an obstruction is within the path of the closing doors, the doors will stop and/or reverse direction prior to imparting a 10-lb force on 1 sq in. of that obstruction. If a contactless obstruction sensing system is employed, it shall be capable of discriminating between the normal doorway environment and passengers or other obstructions within the doorway, and of altering the zones of detection based upon the operating state of the door system.

TS 78.8 Actuators

Doors shall open or close completely in not more than 3.5 seconds from the time of control actuation and shall be subject to the closing force requirements.

Door actuators shall be adjustable so that the door opening and closing speeds can be independently adjustable to satisfy the above requirements. Actuators and the complex door mechanism shall be concealed from passengers but shall be easily accessible for servicing. The door actuators shall be rebuildable. If powered by compressed air, exhaust from the door system shall be routed below the floor of the bus to prevent accumulation of any oil that may be present in the air system and to muffle sound.

Door actuators and associated linkages shall maximize door holding forces in the fully open and fully closed positions to provide firm, non-rattling, non-fluttering door panels while minimizing the force exerted by the doors on an obstruction midway between the fully open and closed positions.

BASE

The rear door actuator(s) shall be under the complete control of the vehicle operator and shall open and close in response to the position of the driver’s door control.

OPTIONS

Doors that employ a “swing” or pantograph geometry and/or are closed by a return spring or counterweight-type device shall be equipped with a positive mechanical holding device that automatically engages and prevents the actuation mechanism from being back-driven from the fully closed position. The holding device shall be overcome only when the driver’s door control is moved to an “Exit Door

Enable" position and the vehicle is moving at a speed of less than 2 mph, or in the event of actuation of the emergency door release.

Locked doors shall require a force of more than 300 lbs to open manually. When the locked doors are manually forced to open, damage shall be limited to the bending of minor door linkage with no resulting damage to the doors, actuators or complex mechanism.

TS 78.8.1 Rear Door Interlocks (Transit Coach)

See "Hardware Mounting" for door system interlock requirements.

TS 78.9 Emergency Operation

In the event of an emergency, it shall be possible to manually open doors designated as emergency exits from inside the bus using a force of no more than 25 lbs after actuating an unlocking device. The unlocking device shall be clearly marked as an emergency-only device and shall require two distinct actions to actuate. The respective door emergency unlocking device shall be accessible from the doorway area. The unlocking device shall be easily reset by the operator without special tools or opening the door mechanism enclosure. Doors that are required to be classified as "emergency exits" shall meet the requirements of FMVSS 217.

TS 78.10 Door Control

The door control shall be located in the operator's area within the hand reach envelope described in SAE Recommended Practice J287, "Driver Hand Control Reach." The driver's door control shall provide tactile feedback to indicate commanded door position and resist inadvertent door actuation.

BASE

Door control located on street side.

TS 78.11 Door Controller

TS 78.11.1 Transit Coach

BASE

Five-Position Driver's Door Controller

The control device shall be protected from moisture. Mounting and location of the door control device handle shall be designed so that it is within comfortable, easy arm's reach of the seated driver. The door control device handle shall be free from interference by other equipment and have adequate clearance so as not to create a pinching hazard.

Position of the door control handle shall result in the following operation of the front and rear doors:

- **Center position:** Front door closed, rear door(s) closed or set to lock.
- **First position forward:** Front door open, rear door(s) closed or set to lock.
- **Second position forward:** Front door open, rear door(s) open or set to open.
- **First position back:** Front door closed, rear door(s) open or set to open.
- **Second position back:** Front door open, rear door(s) open or set to open.

TS 78.12 Door Open/Close

BASE

A control or valve in the operator's compartment shall shut off the power to, and/or dump the power from, the front door mechanism to permit manual operation of the front door with the bus shut down. A master door switch, which is not within reach of the seated operator, when set in the "off" position shall close the rear/center doors (if applicable), deactivate the door control system, release the interlocks and permit only manual operation of the rear/center doors.

OPTIONS

TS 79. Accessibility Provisions

Space and body structural provisions shall be provided at the front or rear door of the bus to accommodate a wheelchair loading system.

TS 79.1 Loading System for 30 to 60 ft Low-Floor Bus

An automatically controlled, power-operated ramp system compliant to requirements defined in 49 CFR Part 38, Subpart B, §38.23c shall provide ingress and egress quickly, safely and comfortably, both in forward and rearward directions, for a passenger in a wheelchair from a level street or curb.

BASE

Front Door Location of Loading System, Flip-Out Design Ramp with 7:1 Slope

The wheelchair loading system shall be located at the front door, with the ramp being of a simple hinged, flip-out type design being capable of deploying to the ground at a maximum 7:1 slope.

OPTIONS

TS 79.2 Wheelchair Accommodations

NOTE: Agency will approve acceptable securement system.

BASE

Two Forward-Facing Wheelchair Securement Locations

Two forward-facing locations, as close to the wheelchair loading system as practical, shall provide parking space and securement system compliant with ADA requirements for a passenger in a wheelchair.

OPTIONS

TS 79.3 Interior Circulation

Maneuvering room inside the bus shall accommodate easy travel for a passenger in a wheelchair from the loading device and from the designated securement area. It shall be designed so that no portion of the wheelchair protrudes into the aisle of the bus when parked in the designated parking space(s). When the positions are fully utilized, an aisle space of no less than 20 in. shall be maintained. As a guide, no width dimension should be less than 34 in. Areas requiring 90 deg turns of wheelchairs should have a clearance arc dimension no less than 45 in., and in the parking area where 180 deg turns are expected, space should

be clear in a full 60 in. diameter circle. A vertical clearance of 12 in. above the floor surface should be provided on the outside of turning areas for wheelchair footrests.

SIGNAGE AND COMMUNICATION

TS 80. Destination Signs

BASE

A destination sign system shall be furnished on the front, and on the right side near the front door.

OPTIONS

All signs shall be controlled via a single human-machine interface (HMI). In the absence of a single mobile data terminal (MDT), the HMI shall be conveniently located for the bus driver within reach of the seated driver.

BASE

The HMI for the Destination signs shall be located to the upper left of the driver.

BASE

The destination sign compartments shall meet the following minimum requirements:

- Compartments shall be designed to prevent condensation and entry of moisture and dirt.
- Compartments shall be designed to prevent fogging of both compartment window and glazing on the unit itself.
- Access shall be provided to allow cleaning of inside compartment window and unit glazing.
- The front window shall have an exterior display area of no less than 8.5 in. high by 56 in. wide.

BASE

No active defogging required.

OPTIONS

BASE

No run number sign shall be installed.

OPTIONS

TS 81. Passenger Information and Advertising (Transit Coach)

TS 81.1 Interior Displays

Provisions shall be made on the rear of the driver's barrier or equipment box located on the wheel well for a frame to retain information such as routes and schedules.

Advertising media 11 in. high and 0.09 in. thick shall be retained near the juncture of the bus ceiling and sidewall. The retainers may be concave and shall support the media without adhesives. The media shall be illuminated by the interior light system.

TS 81.2 Exterior Displays

Provisions shall be made to integrate advertising into the exterior design of the bus. Advertising media, frames or supporting structures shall not detract from the readability of destination signs and signal lights, and shall not compromise passenger visibility. Advertising provisions shall not cause pedestrian hazards or foul automatic bus washing equipment, and shall not cover or interfere with doors, air passages, vehicle fittings or in any other manner restrict the operation or serviceability of the bus.

TS 82. Passenger Stop Request/Exit Signal

TS 82.1 Transit Coach

BASE

Pull Cord Passenger Signal

A passenger "stop requested" signal system that complies with applicable ADA requirements defined in 49 CFR, Part 38.37, shall be provided. The system shall consist of a heavy-duty pull cable, chime and interior sign message. The pull cable shall be located the full length of the bus on the sidewalls at the level where the transom is located. If no transom window is required, then the height of the pull cable shall approximate this transom level and shall be no greater than 63 in. as measured from the floor surface. It shall be easily accessible to all passengers, seated or standing. Pull cable(s) shall activate one or more solid state or magnetic proximity switches. At each wheelchair passenger position and at priority seating positions, additional provisions shall be included to allow a passenger in a mobility aid to easily activate the "stop requested" signal.

An auxiliary passenger "stop requested" signal shall be installed at the rear door to provide passengers standing in the rear door/exit area a convenient means of activating the signal system. The signal shall be a heavy-duty push button type located in the rear door vicinity. Button shall be clearly identified as "passenger signal."

OPTIONS

BASE

Additional "Stop Request" Button on Rear Door Stanchion

A heavy-duty "stop request" signal button shall be installed on the modesty panel stanchion immediately forward of the rear door and clearly identified as "STOP."

TS 82.2 Signal Chime

TS 82.2.1 Transit Coach

BASE

A single “stop requested” chime shall sound when the system is first activated. A double chime shall sound anytime the system is activated from wheelchair passenger areas.

Exit signals located in the wheelchair passenger area shall be no higher than 4 ft above the floor. Instructions shall be provided to clearly indicate function and operation of these signals.

TS 83. Communications

TS 83.1 Camera Surveillance System

BASE

No surveillance system provisions required.

OPTIONS

Table 83.1a	Camera Supplier
Camera Supplier	options
DVR Model	options
DVR Hard Drive Size	options
Camera System Cable Type	options
Event Marker Button	options
Impact Sensor/Accelerometer	options
Discrete Mic	options

Table 83.1b	Camera Required? (Y/N)	Color Camera? (Y/N)	Built-in Mic? (Y/N)
Entrance Door Cam	options	options	options
Forward Facing Cam(Windshield)	options	options	options
Front, Rear Facing Camera	options	options	options
Mid, Rear Facing Camera	options	options	options
Exit Door Camera	options	options	options
Exterior Curb-side Camera	options	options	options
Exterior Street-side Camera	options	options	options
Rear Bumper Camera	options	options	options
Options of additional positions	options	options	options

TS 83.2 Public Address System

A public address system shall be provided on each bus for facilitating radio system and driver-originated announcements to passengers.

BASE

1 P.A. Amplifier located above the driver to the left. Controls shall be accessible to the seated driver. The driver's area shall be furnished with a single 30" gooseneck microphone.

OPTIONS

TS 83.2.1 Speakers

BASE

6 interior loudspeakers shall be provided, semi-flush mounted, on alternate sides of the bus passenger compartment, installed with proper phasing. Total impedance seen at the input connecting end shall be 8 Ohms. Mounting shall be accomplished with riv-nuts and machine screws. 1 exterior loud speaker over top of front door.

TS 83.3 Automatic Passenger Counter (APC)

BASE

No APC system shall be installed.

OPTIONS

TS 83.4 Radio Handset and Control System

TS 83.5

BASE

No radio system required.

OPTIONS

Table 83.5a	Requirement
Radio Supplier	options
Equipment Model Number	options
Cable Type	options
Antenna	options

TS 83.5.1 Drivers Speaker

Each bus shall have a recessed speaker in the ceiling panel above the driver. This speaker shall be the same component used for the speakers in the passenger compartment. It shall have 8 Ohms of impedance.

TS 83.5.2 Handset

Contractor will install a handset for driver use.

TS 83.5.3 Driver Display Unit (DDU)

Contractor shall install a driver display unit as close to the driver's instrument panel as possible.

TS 83.5.4 Emergency Alarm

Contractor shall install an emergency alarm that is accessible to the driver but hidden from view.

TS 84. Event Data Recorders (EDR)

BASE

No EDR shall be installed.

OPTIONS

TS 85. Automatic Vehicle Annunciation /Automatic Vehicle Location

BASE

No AVA/AVL shall be installed.

OPTIONS

Table 85a	Requirement
AVA/AVL Supplier	options
Controller Unit/module	options
Driver Display/HMI	options
cable types	options
Antenna #1	options
Antenna #2	options
Antenna #3	options
Mic	options
Interior LED Sign	options
Does AVA/AVL system include two-way radio?	options
options	options

TS 86. Approved Equals

Table 8 lists products that have been approved for the bus procurement. The list contains products that are of interest to the Agency and is not intended to be a comprehensive listing of every product required for the manufacture of the subject buses. Product categories not listed are left to the discretion of the Contractor so long as the product complies with the specifications. Product specification information is for reference only and may not reflect the latest or future improvements by manufacturers. Any change, revision or substitution of specified products requires approval .of the agency. To add to or revise this list, Contractor must submit a written request per the Specification by the due date found in the RFP for approved equals.

NOTE: Transit agencies are encouraged to list as many suppliers as possible.

TABLE 8
Approved Equals Products

Product	Manufacturer	Product Specification