Attachment B
Missouri River Bridge Plans

BENCH MARK NO. 526, STA. 206+58.271, 303.87 RT.; CUT "X" TOP 0.5' x 0.7' CONC. STA. MARKER POST STA. 420+00L (L611.614 ROW) ELEVATION 962.120

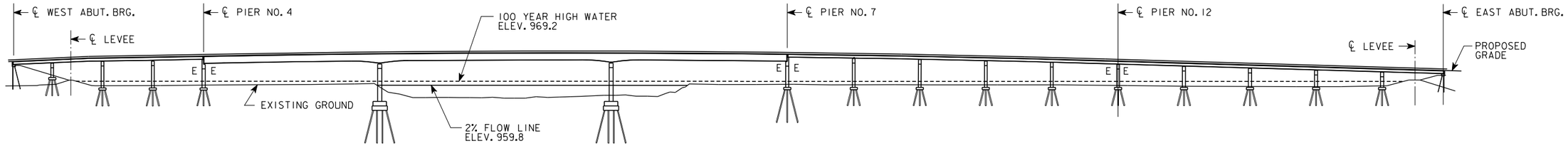

LONGITUDINAL SECTION

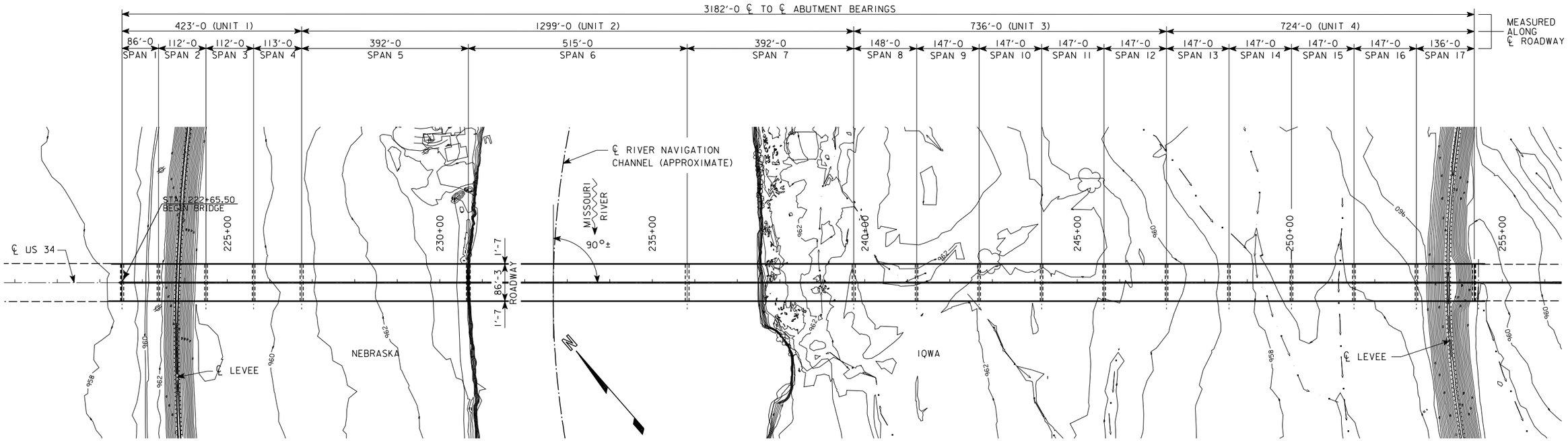

GENERAL PLAN

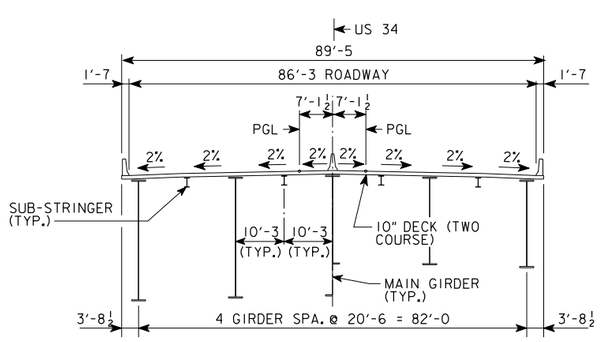

TYP. SECTION NEAR PIERS TYP. SECTION NEAR MIDSPAN

UNIT 2 TYPICAL SECTION

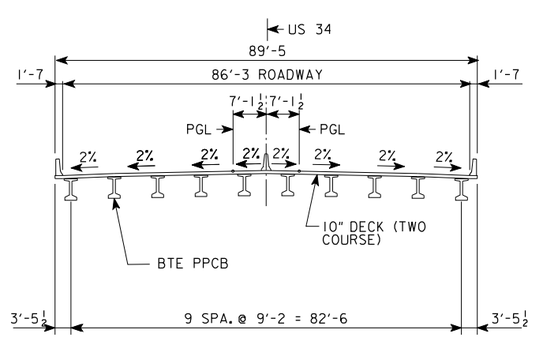

UNIT 1, 3 AND 4 TYPICAL SECTION

NOTE:
ALL UNITS IN FEET UNLESS NOTED OTHERWISE.
SURVEY DATUM REFERENCE:
NAVD88 VERTICAL DATUM AND
NAD83 PROJECT COORDINATES.
THIS STRUCTURE IS TO BE BUILT UNDER CONDITIONS OF ARMY CORP OF ENGINEERS 404 NATIONWIDE PERMIT NO. XXX.

VPI STA 210+00
VPI ELEV 976.73
L = 600'

VPI STA 234+50.00
VPI ELEV 1061.24
L = 2,800'

VPI STA 263+00
VPI ELEV 962.80
L = 700'

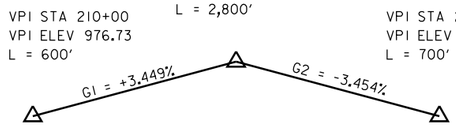

PROPOSED GRADE FOR U.S. 34

LOCATION

US 34 OVER MISSOURI RIVER
T-72N, R-44W, SECTION 2
PLATTVILLE TOWNSHIP
MILLS COUNTY, IOWA
BRIDGE MAINT. NO. XXX
FHWA NO. XXX

T-13N, R-14E, SECTION 30
SARPY COUNTY, NEBRASKA

TRAFFIC ESTIMATE

A.A.D.T. = N/A V.P.D. (2000)
A.A.D.T. = 11,100 V.P.D. (2030)
15% TRUCKS

0 ENGLISH 240
SCALE IN FEET

PRELIMINARY

DESIGN FOR 0° SKEW

3182'-0 x 86'-3 CONTINUOUS WELDED PLATE GIRDER BRIDGE W/ PPCB APPROACHES

US 34 OVER MISSOURI RIVER

SPAN LENGTHS VARY BTE TYPE PPCB

GENERAL PLAN

STA. 238+43.00 (PROPOSED US 34) FEBRUARY 2009

MILLS COUNTY

IOWA DEPARTMENT OF TRANSPORTATION - HIGHWAY DIVISION

DESIGN SHEET NO. 1 OF 5 FILE NO. 30336 DESIGN NO. 311

HDR Engineering, Inc.

DESIGN TEAM IOWA DOT/HDR | MILLS COUNTY | PROJECT NUMBER NHSX-034-01(63)--3H-65 | SHEET NUMBER V.01

02-Apr-09 16:17 bgreen C:\PWworking\OMA\dms07371\65034068.str

BENCH MARK NO. 526, STA. 206+58.271, 303.87 RT.; CUT "X" TOP 0.5' x 0.7' CONC. STA. MARKER POST STA. 420+00L (L611.614 ROW) ELEVATION 962.120

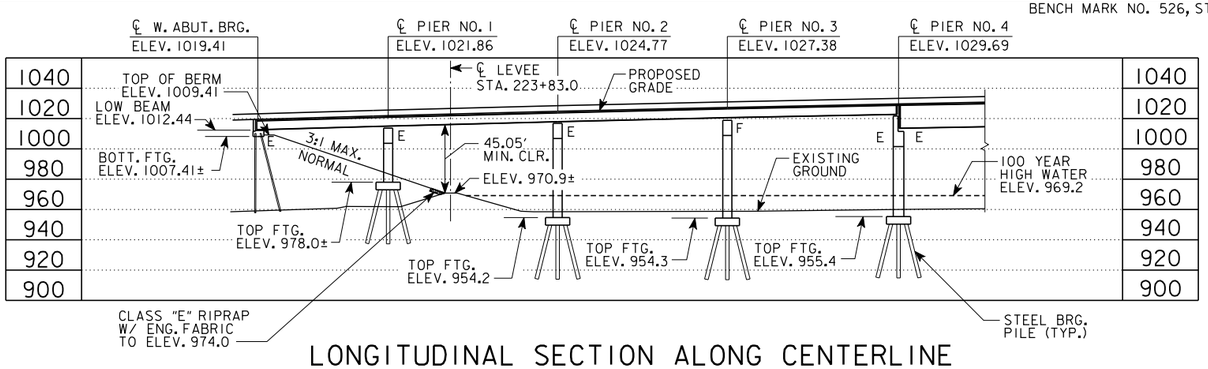

LONGITUDINAL SECTION ALONG CENTERLINE

(NOTE: ELEVATIONS SHOWN ARE AT PROFILE GRADE LINE)

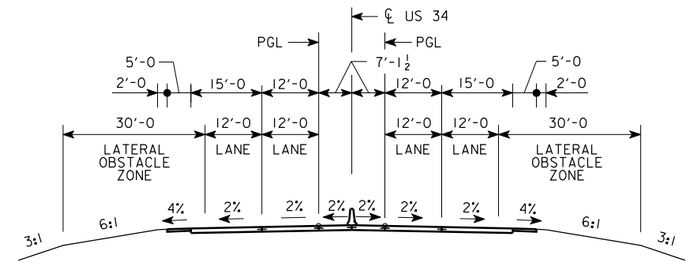

TYPICAL SECTION - NEBRASKA APPROACH

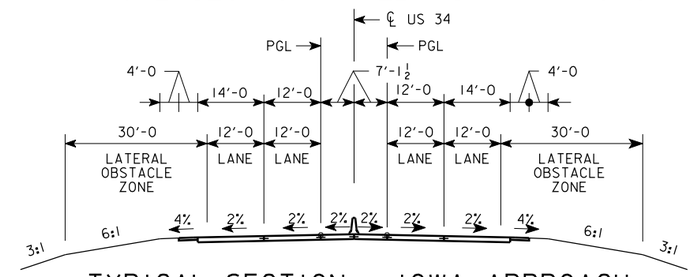

TYPICAL SECTION - IOWA APPROACH

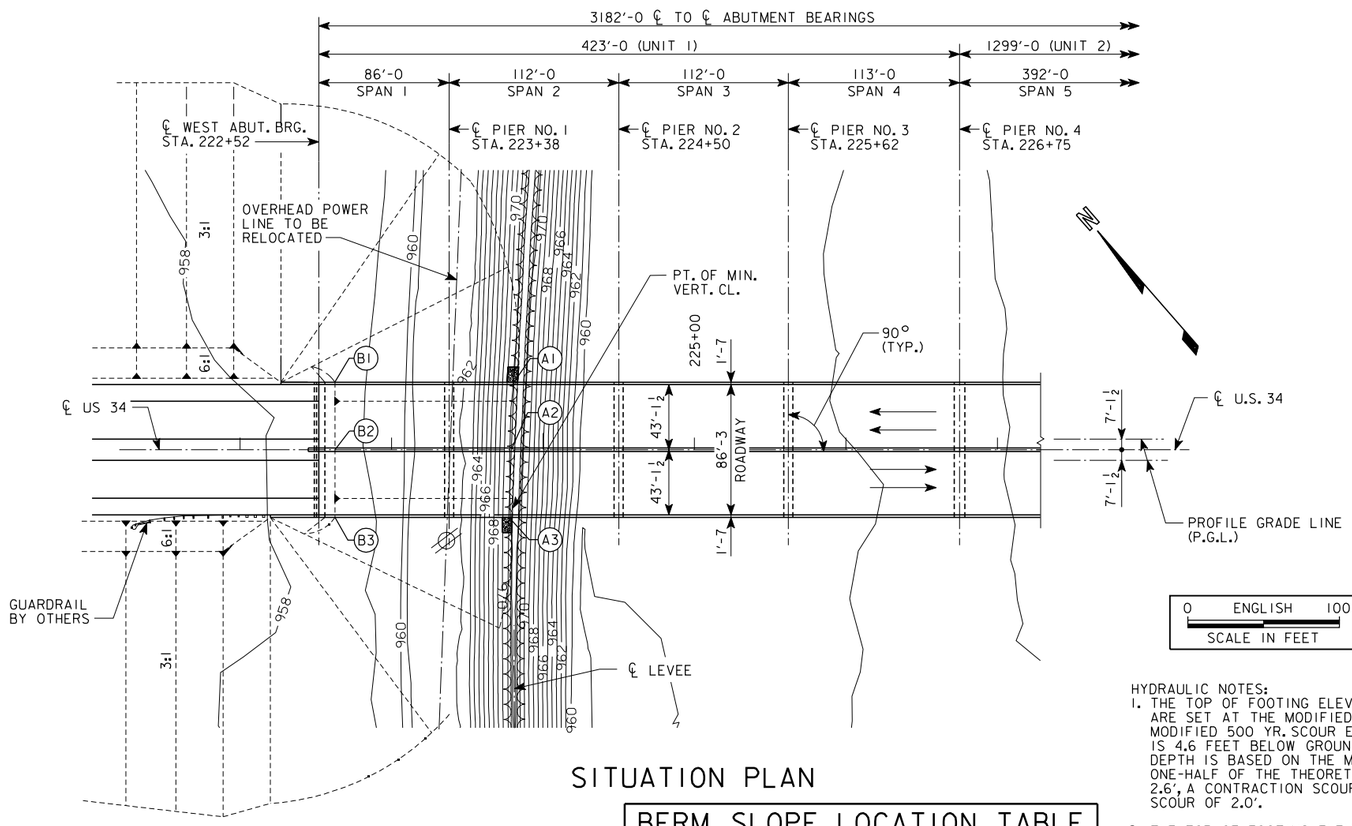

SITUATION PLAN

0 ENGLISH 100
SCALE IN FEET

PRELIMINARY

CLEARANCE DATA

US 34 STATION 223+77.44, 43' RT.
OVERHEAD ELEVATION = 1022.20
DEPTH OF SUPERSTRUCTURE = 6.25'
LEVEE ELEVATION = 970.90
MIN. VERT. CLEARANCE = 45.05'

BERM SLOPE LOCATION TABLE

	STATION	OFFSET	ELEVATION
A1	223+80.80	-44.55	970.90
A2	223+79.06	0.00	970.90
A3	223+77.44	44.55	970.90
B1	222+57.50	-44.55	1009.41
B2	222+57.50	0.00	1009.41
B3	222+57.50	44.55	1009.41

HYDRAULIC NOTES:

1. THE TOP OF FOOTING ELEVATIONS FOR THE OVERBANK PIERS ARE SET AT THE MODIFIED 500 YR. SCOUR ELEVATION. THE MODIFIED 500 YR. SCOUR ELEVATION FOR THE OVER BANK PIERS IS 4.6 FEET BELOW GROUND. THE OVERBANK PIER 500 YR. SCOUR DEPTH IS BASED ON THE MODIFIED HEC-18 METHODOLOGY USING ONE-HALF OF THE THEORETICAL PIER STEM SCOUR OF 5.1'*½ = 2.6', A CONTRACTION SCOUR OF 0.0' AND A LOCAL DEGRADATION SCOUR OF 2.0'.
2. THE TOP OF FOOTING ELEVATIONS FOR RIVER PIERS NO. 5 & 6 ARE SET AT 2 FEET BELOW THE THALWAG ELEVATION OF 931.2 FEET. THE 500 YR. SCOUR DEPTH FOR THE RIVER PIERS IS 42.6 FEET. THE RIVER PIER 500 YR. SCOUR DEPTH IS BASED ON THE HEC-18 METHODOLOGY FOR COMPLEX PIER FOUNDATIONS USING A 10' WIDE PIER STEM AND A 40' WIDE SQUARED END FOOTING.
3. Q_{25} = 132,700 CFS, STAGE ELEV. = 966.1
4. FOR 2% FLOW DURATION,
   $Q_{2\%}$ = 72,300 CFS,
   VELOCITY = 5.0 FPS
   STAGE EL. = 959.8

HYDRAULIC DATA

DRAINAGE AREA = 322,800 SQ. MI.
STREAM SLOPE = 0.3 TO 0.6 FT./MI.

Q_2 = 64,200 CFS
STAGE (NATURAL) = 958.7
CHANNEL VELOCITY = 4.6 FPS

Q_{50} = 148,500 CFS
STAGE (NATURAL) = 967.9
BACKWATER = 0.01 FT.
BRIDGE VELOCITY = 6.8 FPS

Q_{100} = 175,400 CFS
STAGE (NATURAL) = 969.2
BACKWATER = 0.00 FT.
CALCULATED DESIGN SCOUR = ELEV. 892.8 (PIERS 5,6)

Q_{500} = 249,000 CFS
STAGE (NATURAL) = 972.7
BACKWATER = 0.00
CALCULATED MAXIMUM SCOUR = ELEV. 888.5 (PIERS 5, 6)
NE SIDE: LOW ROADWAY ELEV. = 960.4 AT STA. 192+33.33
IA SIDE: LOW ROADWAY ELEV. = 960.6 AT STA. 300+00.00

EXTREME HW STAGE = 978.8 (MEASURED @ I-80 GAGE STATION)
DATE = APRIL 18, 1952
AVG. LOW WATER STAGE = 965.6

Q_{500} DOES NOT OVERTOP BRIDGE OR APPROACHES WITHIN THE LEVEES.
2, 50, 100 AND 500 YEAR DISCHARGES ARE FROM 2003 UPPER MISSISSIPPI RIVER SYSTEM FLOW FREQUENCY STUDY (FFS).
FFS DATUM IS NGVD 1929 WHICH IS 0.31 FT LOWER THAN NAVD 1988 DATUM USED FOR BRIDGE STRUCTURE ELEVATIONS AT THE PROJECT LOCATION.

DESIGN FOR 0° SKEW

3182'-0 x 86'-3 CONTINUOUS WELDED PLATE GIRDER BRIDGE W/ PPCB APPROACHES

US 34 OVER MISSOURI RIVER

SPAN LENGTHS VARY — BTE TYPE PPCB

SITUATION PLAN (UNIT 1)

STA. 238+43.00 (PROPOSED US 34) — FEBRUARY 2009

MILLS COUNTY

IOWA DEPARTMENT OF TRANSPORTATION - HIGHWAY DIVISION

DESIGN SHEET NO. 2 OF 5 FILE NO. 30336 DESIGN NO. 311

HDR

HDR Engineering, Inc.

DESIGN TEAM IOWA DOT/HDR | MILLS COUNTY | PROJECT NUMBER NHSX-034-01(63)--3H-65 | SHEET NUMBER V.02

02-Apr-09 16:17 bgreen C:\PWworking\OMA\dms07371\65034068.str

BENCH MARK NO. 526, STA. 206+58.271, 303.87 RT.; CUT "X" TOP 0.5' x 0.7' CONC. STA. MARKER POST STA. 420+00L (L611.614 ROW) ELEVATION 962.120

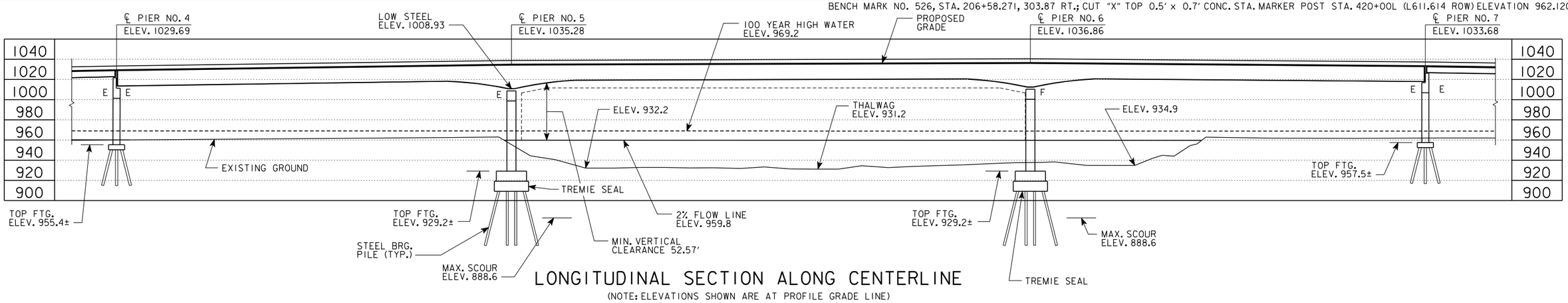

LONGITUDINAL SECTION ALONG CENTERLINE

(NOTE: ELEVATIONS SHOWN ARE AT PROFILE GRADE LINE)

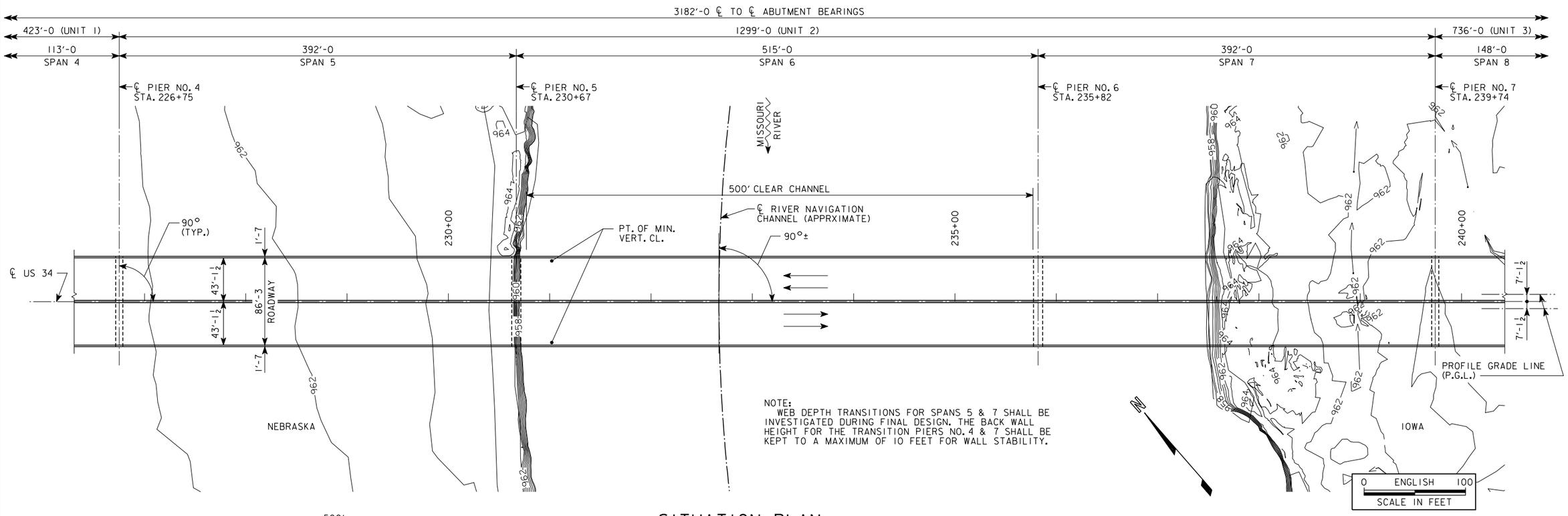

NOTE:
WEB DEPTH TRANSITIONS FOR SPANS 5 & 7 SHALL BE INVESTIGATED DURING FINAL DESIGN. THE BACK WALL HEIGHT FOR THE TRANSITION PIERS NO. 4 & 7 SHALL BE KEPT TO A MAXIMUM OF 10 FEET FOR WALL STABILITY.

SITUATION PLAN

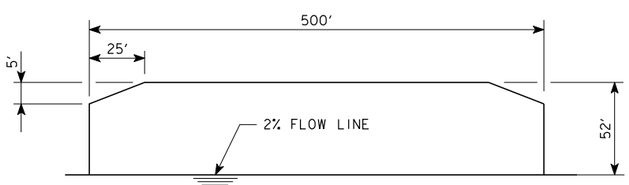

NAVIGATIONAL CLEARANCE ENVELOPE

CLEARANCE DATA

US 34 STATION 231+02.00, 43' LT. & RT.
OVERHEAD ELEVATION = 1034.87
DEPTH OF SUPERSTRUCTURE = 22.50'
2% FLOW LINE ELEVATION = 959.80
MIN. VERT. CLEARANCE = 52.57'

PRELIMINARY

DESIGN FOR 0° SKEW

3182'-0 x 86'-3 CONTINUOUS WELDED PLATE GIRDER BRIDGE W/ PPCB APPROACHES

US 34 OVER MISSOURI RIVER

SPAN LENGTHS VARY — BTE TYPE PPCB

SITUATION PLAN (UNIT 2)

STA. 238+43.00 (PROPOSED US 34) — FEBRUARY 2009

MILLS COUNTY

IOWA DEPARTMENT OF TRANSPORTATION - HIGHWAY DIVISION

DESIGN SHEET NO. 3 OF 5 FILE NO. 30336 DESIGN NO. 311

HDR

HDR Engineering, Inc.

DESIGN TEAM IOWA DOT/HDR	MILLS COUNTY	PROJECT NUMBER NHSX-034-01(63)--3H-65	SHEET NUMBER V.03

02-Apr-09 16:18 bgreen C:\PWworking\OMA\dms07371\65034068.str

BENCH MARK NO. 526, STA. 206+58.271, 303.87 RT.; CUT "X" TOP 0.5' x 0.7' CONC. STA. MARKER POST STA. 420+00L (L611.614 ROW) ELEVATION 962.120

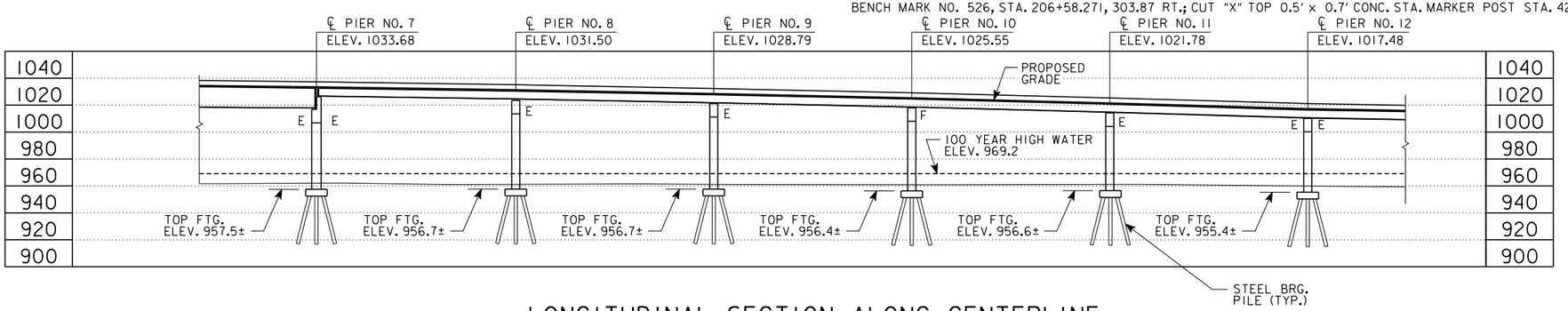

LONGITUDINAL SECTION ALONG CENTERLINE

(NOTE: ELEVATIONS SHOWN ARE AT PROFILE GRADE LINE)

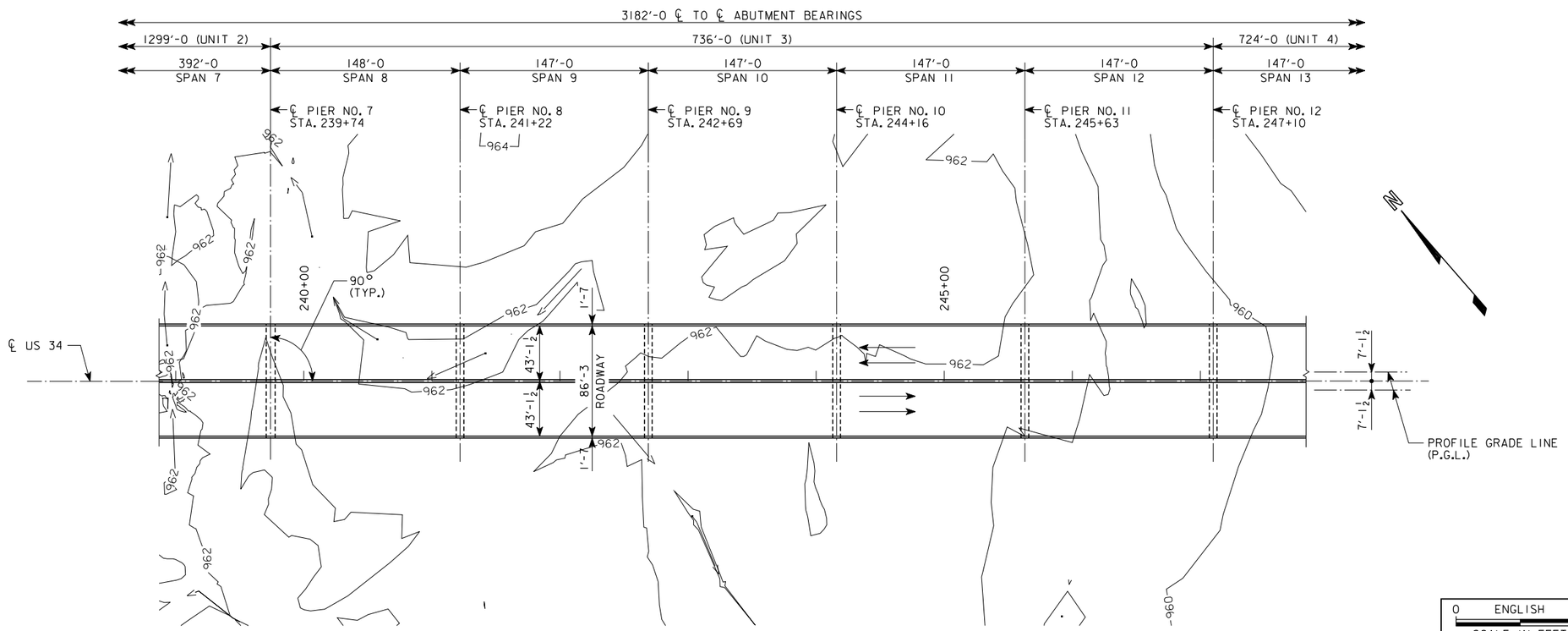

SITUATION PLAN

PRELIMINARY

DESIGN FOR 0° SKEW

3182'-0 x 86'-3 CONTINUOUS WELDED PLATE GIRDER BRIDGE W/ PPCB APPROACHES

US 34 OVER MISSOURI RIVER

SPAN LENGTHS VARY — BTE TYPE PPCB

SITUATION PLAN (UNIT 3)

STA. 238+43.00 (PROPOSED US 34) — FEBRUARY 2009

MILLS COUNTY

IOWA DEPARTMENT OF TRANSPORTATION - HIGHWAY DIVISION

DESIGN SHEET NO. 4 OF 5 FILE NO. 30336 DESIGN NO. 311

HDR

HDR Engineering, Inc.

DESIGN TEAM IOWA DOT/HDR	MILLS COUNTY	PROJECT NUMBER NHSX-034-01(63)--3H-65	SHEET NUMBER V.04

02-Apr-09 16:19 bgreen C:\PWworking\OMA\dms07371\65034068.str

BENCH MARK NO. 526, STA. 206+58.271, 303.87 RT.; CUT "X" TOP 0.5' x 0.7' CONC. STA. MARKER POST STA. 420+00L (L611.614 ROW) ELEVATION 962.120

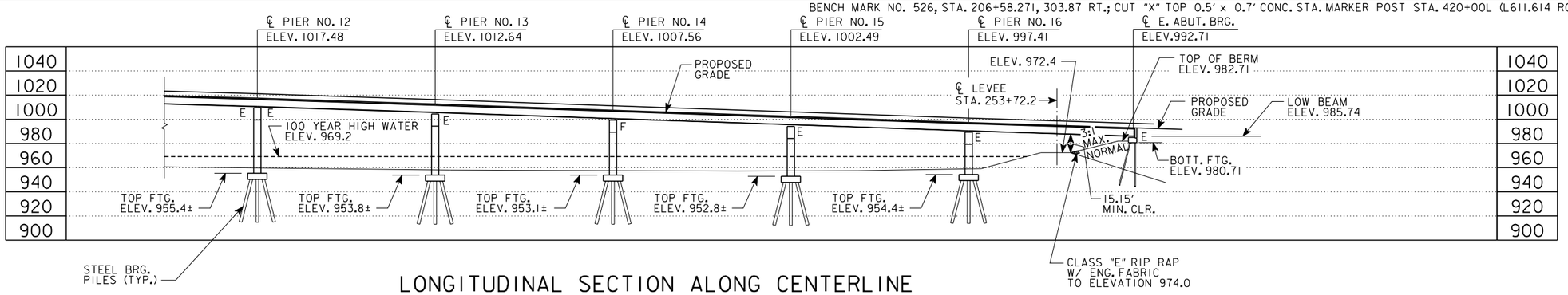

LONGITUDINAL SECTION ALONG CENTERLINE

(NOTE: ELEVATIONS SHOWN ARE AT PROFILE GRADE LINE)

CLEARANCE DATA

US 34 STATION 253+81.80, 43' RT.
OVERHEAD ELEVATION = 993.80
DEPTH OF SUPERSTRUCTURE = 6.25'
LEVEE ELEVATION = 972.4
MIN. VERT. CLEARANCE = 15.15'

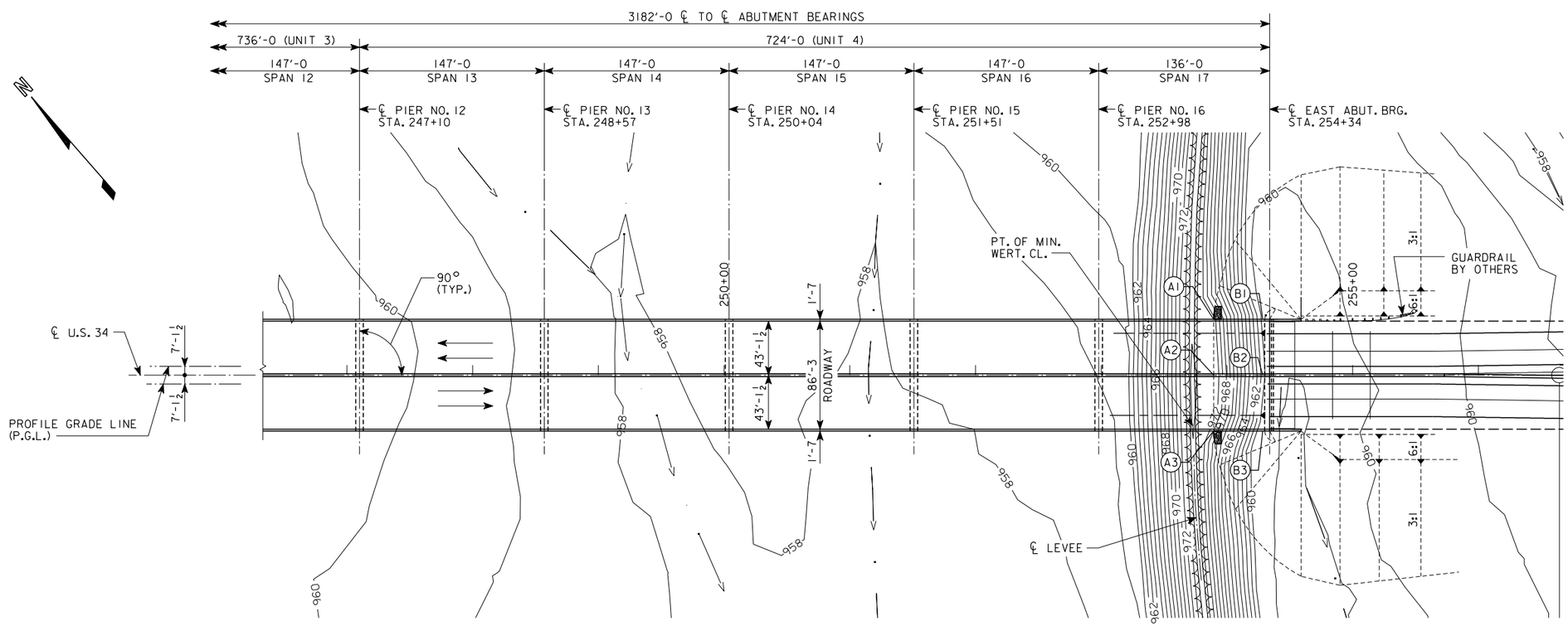

SITUATION PLAN

BERM SLOPE LOCATION TABLE			
	STATION	OFFSET	ELEVATION
A1	253+89.5	-44.55	972.40
A2	253+89.5	0.00	972.40
A3	253+89.5	44.55	971.00
B1	254+28.5	-44.55	982.71
B2	254+28.5	0.00	982.71
B3	254+28.5	44.55	982.71

PRELIMINARY

DESIGN FOR 0° SKEW

3182'-0 x 86'-3 CONTINUOUS WELDED PLATE GIRDER BRIDGE W/ PPCB APPROACHES

US 34 OVER MISSOURI RIVER

SPAN LENGTHS VARY — BTE TYPE PPCB

SITUATION PLAN (UNIT 4)

STA. 238+43.00 (PROPOSED US 34) — FEBRUARY 2009

MILLS COUNTY

IOWA DEPARTMENT OF TRANSPORTATION - HIGHWAY DIVISION

DESIGN SHEET NO. 5 OF 5 FILE NO. 30336 DESIGN NO. 311

HDR Engineering, Inc.

DESIGN TEAM IOWA DOT/HDR | MILLS COUNTY | PROJECT NUMBER NHSX-034-01(63)--3H-65 | SHEET NUMBER V.05

02-Apr-09 16:20 bgreen C:\PWworking\OMA\dms07371\65034068.str