O

Orient

No Restrictions

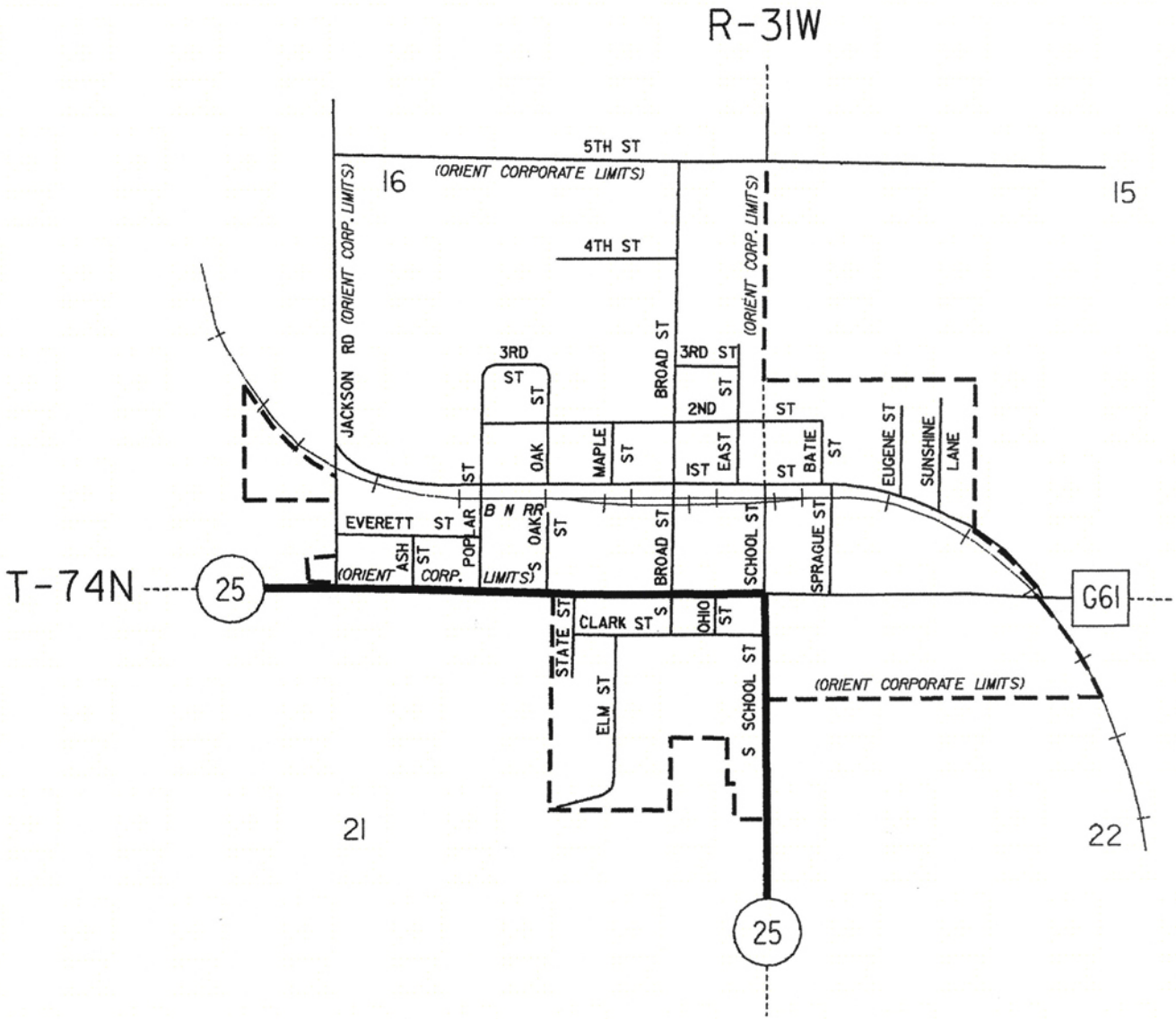

Iowa Department of Transportation

Office of Motor Carrier Services