DATE: 08-20-2010

IOWA DEPARTMENT OF TRANSPORTATION
VEHICULAR TURNING MOVEMENTS
ANNUAL AVERAGE DAILY TRAFFIC - YEAR 2008
LEGAL DESC SEC 30 TWP 76 RGE 25

COUNTY:WARREN
I 35 & IA 92

STATION NO. 91 31 2909 3991

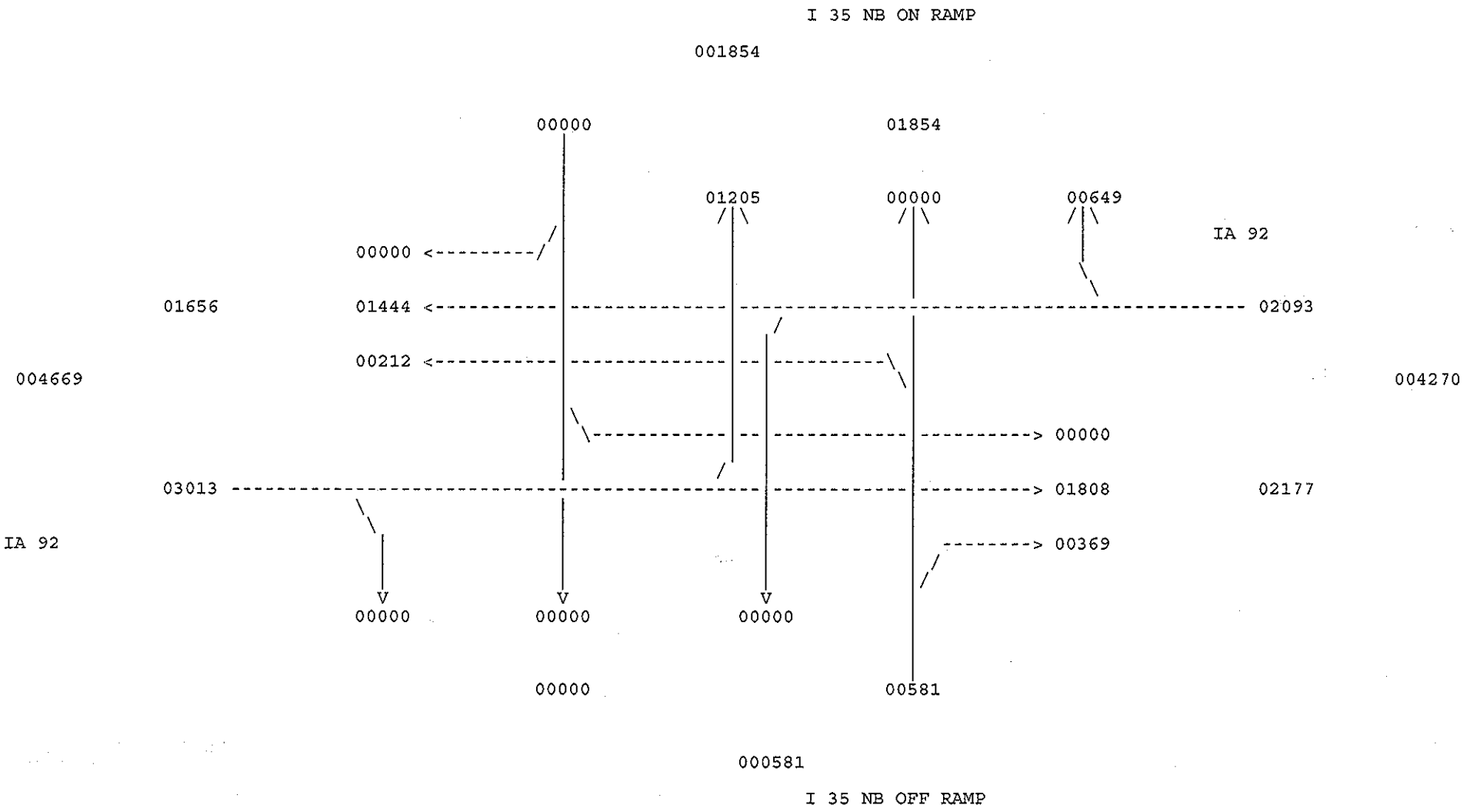

D1530926
COUNTY IOWNSHIP NODE LOCAIION YEAR
91 31 2909 3991 2008

IURNING MOVEMENT SYSTEM
TRAFFIC COUNT SUMMARY
ALL VEHICLES

PRINIER ID: IPRT003W PAGE 0001
CIIY:
COUNTY: WARREN

HOUR	******* NORIH LEG I 35 NB ON RAMP				******* IA 92	EAST LEG ********			******* SOUTH LEG I 35 NB OFF RAMP			*******	******* IA 92	WEST LEG ********		
	RI	ST	LT	TOTAL	RT	ST	LT	TOTAL	LT	SI	RT	IOIAL	LT	SI	RT	IOIAL
07- 8AM	0	0	0	0	138	57	0	195	20	0	37	57	184	99	0	283
08- 9AM	0	0	0	0	50	84	0	134	13	0	16	29	107	93	0	200
11-12PM	0	0	0	0	33	80	0	113	11	0	17	28	77	110	0	187
12-1 PM	0	0	0	0	31	102	0	133	16	0	29	45	86	85	0	171
3- 4PM	0	0	0	0	24	127	0	151	12	0	25	37	73	150	0	223
4- 5PM	0	0	0	0	21	142	0	163	23	0	26	49	59	187	0	246
5- 6PM	0	0	0	0	37	151	0	188	14	0	40	54	34	206	0	240
IOIALS	0	0	0	0	334	743	0	1077	109	0	190	299	620	930	0	1550

SIATION DISPLAYED
PF4 QUARTER HOUR PF5 CLASS PF7 BKWD PF8 FWD PF15 MAIN MENU PF21 SCREEN PRINI CLEAR EXIT

D1530927

COUNTY	TOWNSHIP	NODE	LOCATION	YEAR
91	31	2909	3991	2008

TURNING MOVEMENT SYSTEM
TRAFFIC COUNT SUMMARY
SINGLE UNIT TRUCKS

PRINTER ID: TPRT003W PAGE 0001
CITY:
COUNTY: WARREN

HOUR	******* NORTH LEG I 35 NB ON RAMP			*******	******* EAST LEG IA 92			********	******* SOUTH LEG I 35 NB OFF RAMP			*******	******* WEST LEG IA 92			********
	RT	ST	LT	TOTAL	RT	ST	LT	TOTAL	LT	ST	RT	TOTAL	LT	ST	RT	TOTAL
7- 8AM	0	0	0	0	0	2	0	2	0	0	0	0	5	5	0	10
8- 9AM	0	0	0	0	0	7	0	7	1	0	0	1	3	3	0	6
11-12PM	0	0	0	0	2	3	0	5	1	0	0	1	7	17	0	24
12- 1PM	0	0	0	0	0	10	0	10	0	0	1	1	5	11	0	16
3- 4PM	0	0	0	0	1	5	0	6	2	0	0	2	1	18	0	19
4- 5PM	0	0	0	0	2	6	0	8	2	0	0	2	2	7	0	9
5- 6PM	0	0	0	0	1	2	0	3	0	0	2	2	0	4	0	4
TOTALS	0	0	0	0	6	35	0	41	6	0	3	9	23	65	0	88

STATION DISPLAYED
PF4 QUARTER HOUR PF5 CLASS PF7 BKWD PF8 FWD PF15 MAIN MENU PF21 SCREEN PRINT CLEAR EXIT

D1530928

COUNTY	TOWNSHIP	NODE	LOCATION	YEAR
91	31	2909	3991	2008

TURNING MOVEMENT SYSTEM
TRAFFIC COUNT SUMMARY
COMBINATION TRUCKS

PRINTER ID: TPRT003W PAGE 0001
CITY:
COUNTY: WARREN

HOUR	******* NORTH LEG I 35 NB ON RAMP			*******	******* IA 92	EAST LEG		********	******* SOUTH LEG I 35 NB OFF RAMP			*******	******* IA 92	WEST LEG		********
	RT	ST	LT	TOTAL	RT	ST	LT	TOTAL	LT	ST	RT	TOTAL	LT	ST	RT	TOTAL
7- 8AM	0	0	0	0	0	1	0	1	3	0	2	5	2	4	0	6
8- 9AM	0	0	0	0	1	5	0	6	5	0	2	7	5	6	0	11
11-12PM	0	0	0	0	0	7	0	7	1	0	1	2	6	4	0	10
12- 1PM	0	0	0	0	0	12	0	12	2	0	12	14	10	1	0	11
3- 4PM	0	0	0	0	2	6	0	8	2	0	1	3	3	4	0	7
4- 5PM	0	0	0	0	1	3	0	4	4	0	1	5	5	7	0	12
5- 6PM	0	0	0	0	0	1	0	1	3	0	1	4	1	10	0	11
TOTALS	0	0	0	0	4	35	0	39	20	0	20	40	32	36	0	68

STATION DISPLAYED
PF4 QUARTER HOUR PF5 CLASS PF7 BKWD PF8 FWD PF15 MAIN MENU PF21 SCREEN PRINT CLEAR EXIT