DAIE: 08-17-2010

IOWA DEPARTMENT OF IRANSPORTATION
VEHICULAR TURNING MOVEMENTS
ANNUAL AVERAGE DAILY TRAFFIC - YEAR 2008
IN ANKENY

COUNIY:POLK
I 35 & CORPORAIE WOODS DR

STATION NO. 77 23 8803 7993

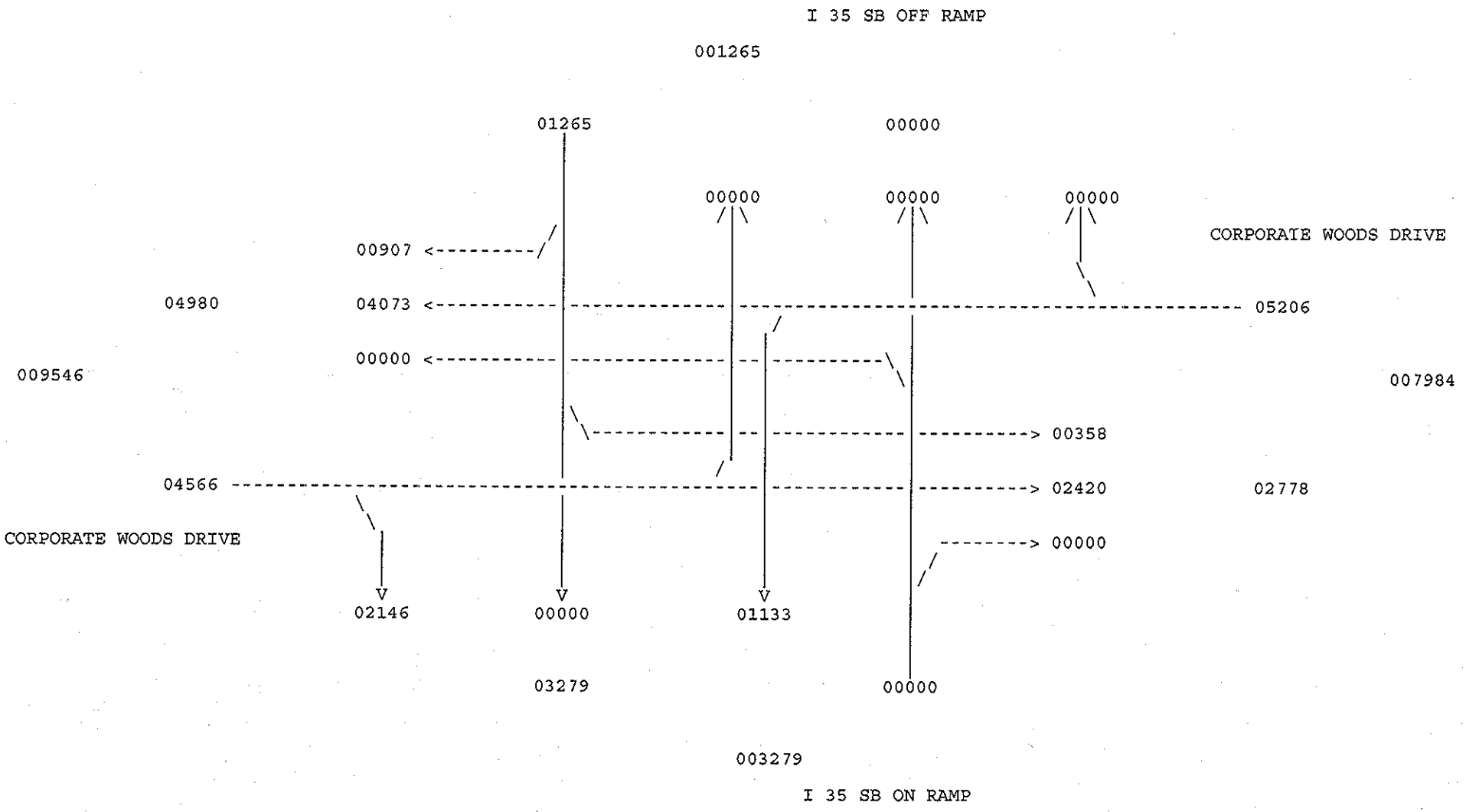

D1530926

COUNIY	TOWNSHIP	NODE	LOCATION	YEAR
77	23	8803	7993	2008

TURNING MOVEMENT SYSIEM
TRAFFIC COUNT SUMMARY
ALL VEHICLES

PRINIER ID: TPRI003W PAGE 0001
CITY: ANKENY
COUNTY: POLK

HOUR	******* NORTH LEG ******* I 35 SB OFF RAMP				******* EAST LEG ******** CORPORAIE WOODS DRIVE				******* SOUTH LEG ******* I 35 SB ON RAMP				******* WEST LEG ******** CORPORATE WOODS DRIVE			
	RT	ST	LT	IOTAL	RT	ST	LT	TOIAL	LT	ST	RI	IOIAL	LT	ST	RT	TOIAL
07- 8AM	96	0	23	119	0	384	52	436	0	0	0	0	0	172	227	399
08- 9AM	96	0	26	122	0	254	60	314	0	0	0	0	0	156	149	305
11-12PM	49	0	33	82	0	202	100	302	0	0	0	0	0	135	102	237
12-1 PM	40	0	25	65	0	256	69	325	0	0	0	0	0	162	100	262
3- 4PM	62	0	27	89	0	294	101	395	0	0	0	0	0	189	163	352
4- 5PM	75	0	31	106	0	395	144	539	0	0	0	0	0	247	228	475
5- 6PM	69	0	27	96	0	401	82	483	0	0	0	0	0	238	183	421
TOIALS	487	0	192	679	0	2186	608	2794	0	0	0	0	0	1299	1152	2451

STATION DISPLAYED
PF4 QUARTER HOUR PF5 CLASS PF7 BKWD PF8 FWD PF15 MAIN MENU PF21 SCREEN PRINI CLEAR EXIT

D1530927

COUNTY	TOWNSHIP	NODE	LOCATION	YEAR
77	23	8803	7993	2008

TURNING MOVEMENT SYSTEM
TRAFFIC COUNT SUMMARY
SINGLE UNIT TRUCKS

PRINIER ID: IPRI003W PAGE 0001
CITY: ANKENY
COUNTY: POLK

HOUR	******* NORIH LEG I 35 SB OFF RAMP			*******	******* EAST LEG CORPORATE WOODS DRIVE			********	******* SOUTH LEG I 35 SB ON RAMP			*******	******* WEST LEG CORPORATE WOODS DRIVE			********
	RT	ST	LI	TOTAL	RT	ST	LT	TOTAL	LI	ST	RT	TOTAL	LT	SI	RT	TOIAL
7- 8AM	12	0	1	13	0	7	1	8	0	0	0	0	0	30	18	48
8- 9AM	18	0	0	18	0	25	3	28	0	0	0	0	0	27	21	48
11-12PM	10	0	0	10	0	16	4	20	0	0	0	0	0	21	15	36
12- 1PM	3	0	1	4	0	28	0	28	0	0	0	0	0	15	10	25
3- 4PM	15	0	1	16	0	27	2	29	0	0	0	0	0	16	9	25
4- 5PM	11	0	2	13	0	21	2	23	0	0	0	0	0	11	8	19
5- 6PM	13	0	0	13	0	29	1	30	0	0	0	0	0	10	5	15
TOTALS	82	0	5	87	0	153	13	166	0	0	0	0	0	130	86	216

STATION DISPLAYED
PF4 QUARTER HOUR PF5 CLASS PF7 BKWD PF8 FWD PF15 MAIN MENU PF21 SCREEN PRINT CLEAR EXII

D1530928

COUNTY	TOWNSHIP	NODE	LOCATION	YEAR
77	23	8803	7993	2008

TURNING MOVEMENT SYSTEM
TRAFFIC COUNT SUMMARY
COMBINATION TRUCKS

PRINTER ID: TPRI003W PAGE 0001
CITY: ANKENY
COUNTY: POLK

HOUR	******* NORTH LEG I 35 SB OFF RAMP			*******	******* EAST LEG CORPORATE WOODS DRIVE			********	******* SOUTH LEG I 35 SB ON RAMP			*******	******* WEST LEG CORPORATE WOODS DRIVE			********
	RT	ST	LT	TOTAL	RT	ST	LT	TOTAL	LT	ST	RT	TOTAL	LT	ST	RT	TOTAL
7- 8AM	8	0	1	9	0	13	0	13	0	0	0	0	0	13	13	26
8- 9AM	13	0	1	14	0	6	0	6	0	0	0	0	0	15	19	34
11-12PM	10	0	0	10	0	10	1	11	0	0	0	0	0	14	14	28
12- 1PM	8	0	0	8	0	9	2	11	0	0	0	0	0	7	6	13
3- 4PM	12	0	0	12	0	12	2	14	0	0	0	0	0	8	6	14
4- 5PM	17	0	0	17	0	16	0	16	0	0	0	0	0	4	13	17
5- 6PM	17	0	0	17	0	12	1	13	0	0	0	0	0	5	8	13
TOTALS	85	0	2	87	0	78	6	84	0	0	0	0	0	66	79	145

STATION DISPLAYED
PF4 QUARTER HOUR PF5 CLASS PF7 BKWD PF8 FWD PF15 MAIN MENU PF21 SCREEN PRINT CLEAR EXIT