DATE: 08-16-2010

IOWA DEPARTMENT OF TRANSPORTATION
VEHICULAR TURNING MOVEMENTS
ANNUAL AVERAGE DAILY TRAFFIC - YEAR 2008
IN RED OAK

COUNTY:MONTGOMERY
US 34 & EASTERN AVE

STATION NO. 69 22 4449 0991

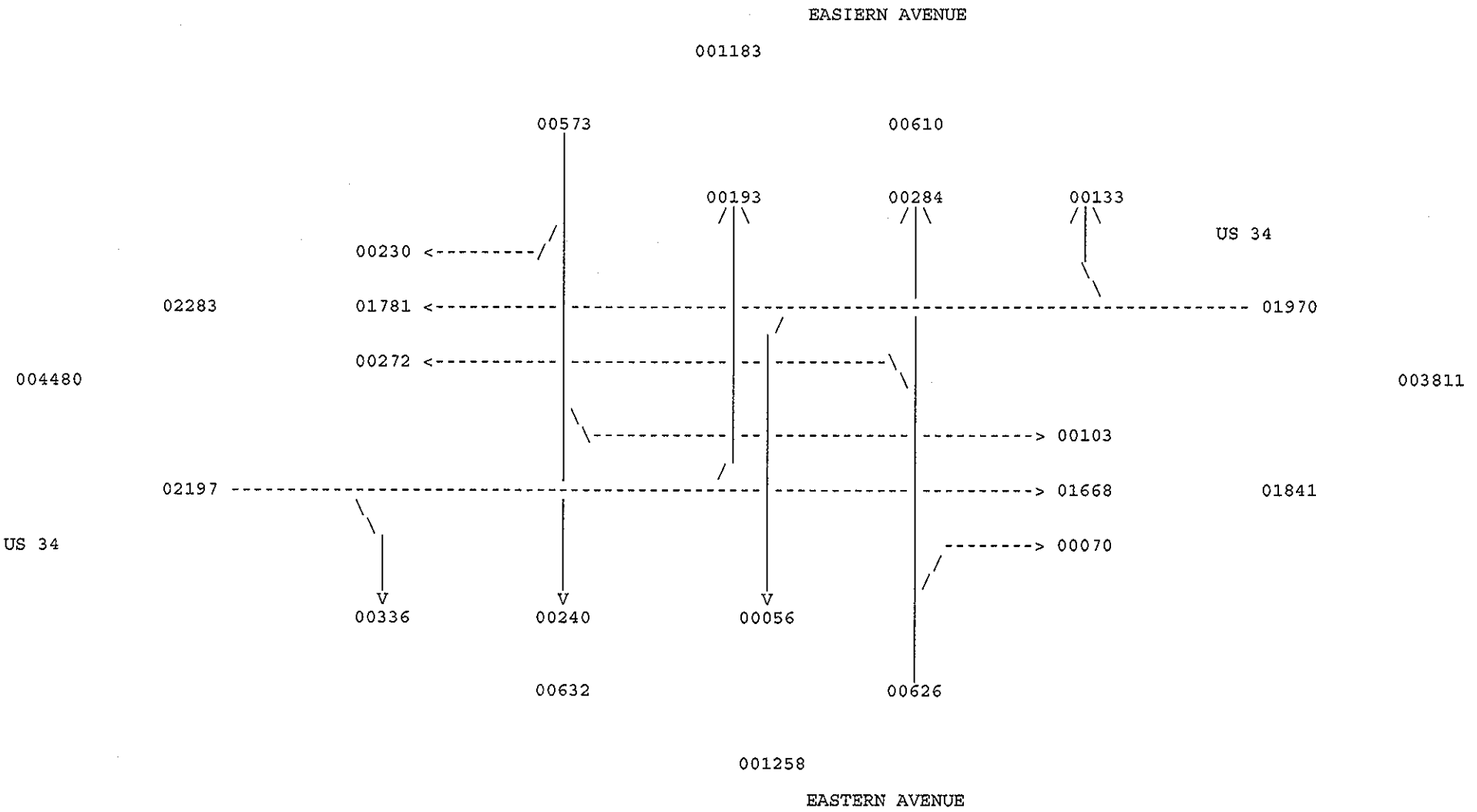

D1530926

COUNIY	TOWNSHIP	NODE	LOCATION	YEAR
69	22	4449	0991	2008

TURNING MOVEMENI SYSIEM
TRAFFIC COUNT SUMMARY
ALL VEHICLES

PRINTER ID: IPRI003W PAGE 0001
CITY: RED OAK
COUNIY: MONTGOMERY

HOUR	******* NORTH LEG ******* EASIERN AVENUE				******* EASI LEG ******** US 34				******* SOUTH LEG ******* EASTERN AVENUE				******* WEST LEG ******** US 34			
	RT	ST	LT	TOTAL	RT	ST	LT	TOTAL	LT	SI	RT	TOTAL	LT	ST	RT	IOIAL
07- 8AM	8	6	5	19	14	171	3	188	26	23	4	53	20	58	9	87
08- 9AM	8	12	4	24	14	143	4	161	18	29	9	56	26	86	13	125
11-12PM	17	17	8	42	7	115	2	124	19	20	3	42	15	107	20	142
12-1 PM	17	16	7	40	14	101	5	120	19	24	5	48	11	121	26	158
3- 4PM	24	23	8	55	6	120	5	131	19	17	5	41	12	138	26	176
4- 5PM	30	27	14	71	7	117	5	129	20	18	7	45	5	154	35	194
5- 6PM	12	20	6	38	5	130	4	139	16	12	2	30	8	176	40	224
TOTALS	116	121	52	289	67	897	28	992	137	143	35	315	97	840	169	1106

SIAIION DISPLAYED
PF4 QUARTER HOUR PF5 CLASS PF7 BKWD PF8 FWD PF15 MAIN MENU PF21 SCREEN PRINT CLEAR EXIT

D1530927
COUNTY IOWNSHIP NODE LOCATION YEAR
69 22 4449 0991 2008

IURNING MOVEMENT SYSIEM
TRAFFIC COUNT SUMMARY
SINGLE UNIT TRUCKS

PRINIER ID: TPRT003W PAGE 0001
CITY: RED OAK
COUNTY: MONIGOMERY

HOUR	******* NORTH LEG EASTERN AVENUE			*******	******* EASI LEG US 34			********	******* SOUTH LEG EASTERN AVENUE			*******	******* WESI LEG US 34			********
	RT	SI	LT	TOTAL	RI	ST	LT	TOTAL	LT	SI	RI	TOTAL	LI	ST	RI	TOTAL
7- 8AM	1	0	0	1	1	7	0	8	0	0	0	0	0	3	1	4
8- 9AM	0	0	1	1	0	13	0	13	0	1	0	1	1	7	0	8
11-12PM	1	2	0	3	0	13	0	13	0	2	0	2	0	5	0	5
12- 1PM	1	0	1	2	0	6	0	6	0	2	0	2	0	4	0	4
3- 4PM	0	0	0	0	0	8	0	8	0	0	0	0	0	3	0	3
4- 5PM	0	0	1	1	1	9	0	10	0	0	0	0	0	6	0	6
5- 6PM	1	0	1	2	0	1	0	1	1	0	0	1	2	2	0	4
IOIALS	4	2	4	10	2	57	0	59	1	5	0	6	3	30	1	34

STATION DISPLAYED
PF4 QUARTER HOUR PF5 CLASS PF7 BKWD PF8 FWD PF15 MAIN MENU PF21 SCREEN PRINT CLEAR EXIT

D1530928
COUNIY TOWNSHIP NODE LOCATION YEAR
69 22 4449 0991 2008

TURNING MOVEMENT SYSTEM
TRAFFIC COUNT SUMMARY
COMBINATION TRUCKS

PRINTER ID: TPRT003W PAGE 0001
CITY: RED OAK
COUNIY: MONIGOMERY

HOUR	******* NORTH LEG EASTERN AVENUE RT	ST	LT	TOTAL	******* EAST LEG US 34 RT	ST	LI	TOTAL	******** SOUTH LEG EASIERN AVENUE LT	SI	RI	IOIAL	******* WESI LEG US 34 LI	ST	RT	TOTAL
7- 8AM	1	0	0	1	0	8	0	8	0	0	0	0	0	11	0	11
8- 9AM	0	0	0	0	0	10	0	10	0	0	0	0	0	9	0	9
11-12PM	0	0	0	0	0	18	0	18	0	0	0	0	0	13	0	13
12- 1PM	1	0	0	1	0	11	0	11	0	0	0	0	0	27	0	27
3- 4PM	0	0	0	0	1	13	0	14	0	0	0	0	0	15	0	15
4- 5PM	0	0	0	0	0	21	0	21	0	0	0	0	0	13	0	13
5- 6PM	0	0	1	1	0	7	0	7	0	0	0	0	0	7	0	7
TOTALS	2	0	1	3	1	88	0	89	0	0	0	0	0	95	0	95

STATION DISPLAYED
PF4 QUARTER HOUR PF5 CLASS PF7 BKWD PF8 FWD PF15 MAIN MENU PF21 SCREEN PRINT CLEAR EXII