DAIE: 08-19-2010

IOWA DEPARTMENT OF TRANSPORIATION
VEHICULAR TURNING MOVEMENTS
ANNUAL AVERAGE DAILY IRAFFIC - YEAR 2008
LEGAL DESC SEC 17 TWP 72 RGE 43

COUNIY:MILLS
I 29, US 34 & INGRHAM AVE

STATION NO 65 21 6521 7991

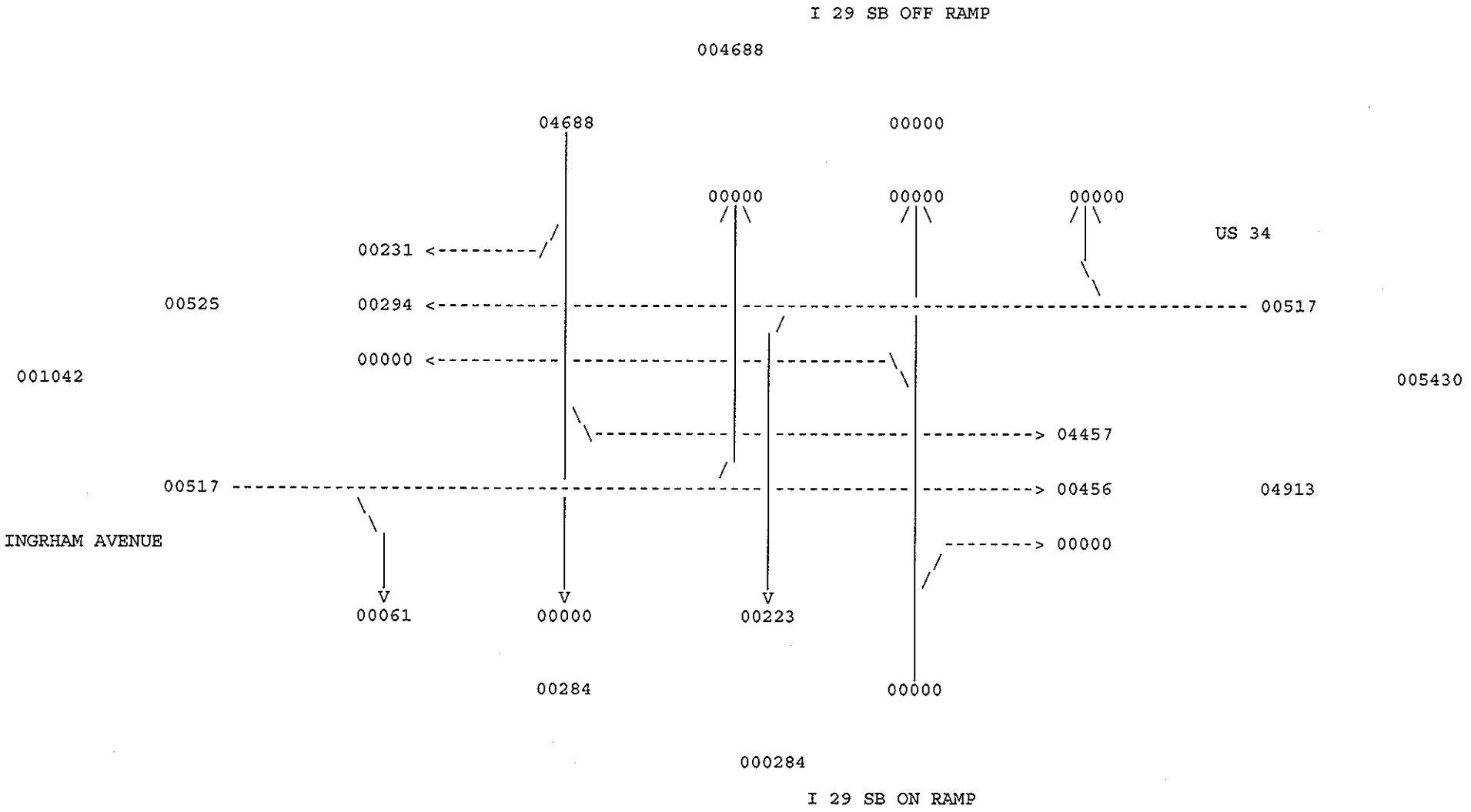

D1530926
COUNIY IOWNSHIP NODE LOCAIION YEAR
65 21 6521 7991 2008

IURNING MOVEMENT SYSTEM
TRAFFIC COUNT SUMMARY
ALL VEHICLES

PRINTER ID: TPRT003W PAGE 0001
CITY:
COUNIY: MILLS

HOUR	******* NORTH LEG I 29 SB OFF RAMP			*******	******* EASI LEG US 34			*******	******* SOUTH LEG I 29 SB ON RAMP			*******	******* WEST LEG INGRHAM AVENUE			*******
	RT	ST	LT	TOTAL	RI	ST	LT	IOIAL	LT	ST	RI	IOIAL	LT	ST	RT	TOTAL
07- 8AM	10	0	224	234	0	22	9	31	0	0	0	0	0	37	0	37
08- 9AM	11	0	177	188	0	27	15	42	0	0	0	0	0	27	4	31
11-12PM	14	0	186	200	0	15	19	34	0	0	0	0	0	32	5	37
12-1 PM	21	0	221	242	0	21	16	37	0	0	0	0	0	39	5	44
3- 4PM	16	0	330	346	0	25	18	43	0	0	0	0	0	31	6	37
4- 5PM	25	0	523	548	0	20	17	37	0	0	0	0	0	33	7	40
5- 6PM	20	0	599	619	0	19	19	38	0	0	0	0	0	32	4	36
TOTALS	117	0	2260	2377	0	149	113	262	0	0	0	0	0	231	31	262

SIAIION DISPLAYED
PF4 QUARTER HOUR PF5 CLASS PF7 BKWD PF8 FWD PF15 MAIN MENU PF21 SCREEN PRINT CLEAR EXIT

D1530927
COUNTY IOWNSHIP NODE LOCATION YEAR
65 21 6521 7991 2008

TURNING MOVEMENT SYSIEM
TRAFFIC COUNT SUMMARY
SINGLE UNIT IRUCKS

PRINIER ID: IPRI003W PAGE 0001
CITY:
COUNTY: MILLS

HOUR	******* NORTH LEG I 29 SB OFF RAMP			*******	******* EAST LEG US 34			********	******* SOUTH LEG I 29 SB ON RAMP			*******	******* WESI LEG INGRHAM AVENUE			********
	RT	ST	LT	IOIAL	RT	SI	LT	TOIAL	LT	ST	RI	IOIAL	LT	ST	RT	TOIAL
7- 8AM	2	0	11	13	0	0	0	0	0	0	0	0	0	4	0	4
8- 9AM	3	0	14	17	0	1	0	1	0	0	0	0	0	5	1	6
11-12PM	0	0	10	10	0	0	0	0	0	0	0	0	0	4	0	4
12- 1PM	2	0	10	12	0	1	1	2	0	0	0	0	0	2	3	5
3- 4PM	0	0	6	6	0	0	1	1	0	0	0	0	0	5	0	5
4- 5PM	2	0	12	14	0	1	0	1	0	0	0	0	0	1	2	3
5- 6PM	2	0	1	3	0	1	0	1	0	0	0	0	0	3	0	3
TOTALS	11	0	64	75	0	4	2	6	0	0	0	0	0	24	6	30

STATION DISPLAYED
PF4 QUARTER HOUR PF5 CLASS PF7 BKWD PF8 FWD PF15 MAIN MENU PF21 SCREEN PRINI CLEAR EXII

D1530928
COUNTY TOWNSHIP NODE LOCAIION YEAR
65 21 6521 7991 2008

IURNING MOVEMENT SYSTEM
IRAFFIC COUNT SUMMARY
COMBINATION IRUCKS

PRINIER ID: TPRT003W PAGE 0001
CITY:
COUNTY: MILLS

HOUR	******* NORTH LEG ******* I 29 SB OFF RAMP				******* EASI LEG ******* US 34				******* SOUTH LEG ******* I 29 SB ON RAMP				******* WEST LEG ******* INGRHAM AVENUE			
	RT	ST	LT	IOTAL	RT	ST	LT	IOIAL	LT	ST	RT	TOIAL	LT	ST	RT	IOIAL
7- 8AM	4	0	12	16	0	0	0	0	0	0	0	0	0	11	0	11
8- 9AM	1	0	22	23	0	2	3	5	0	0	0	0	0	5	1	6
11-12PM	0	0	17	17	0	1	1	2	0	0	0	0	0	10	1	11
12- 1PM	1	0	24	25	0	3	2	5	0	0	0	0	0	5	0	5
3- 4PM	0	0	17	17	0	4	0	4	0	0	0	0	0	2	0	2
4- 5PM	0	0	9	9	0	1	0	1	0	0	0	0	0	2	0	2
5- 6PM	1	0	13	14	0	1	0	1	0	0	0	0	0	3	0	3
TOTALS	7	0	114	121	0	12	6	18	0	0	0	0	0	38	2	40

STATION DISPLAYED
PF4 QUARTER HOUR PF5 CLASS PF7 BKWD PF8 FWD PF15 MAIN MENU PF21 SCREEN PRINT CLEAR EXIT