DATE: 08-10-2010

IOWA DEPARTMENT OF IRANSPORIATION
VEHICULAR TURNING MOVEMENTS
ANNUAL AVERAGE DAILY TRAFFIC - YEAR 2008
LEGAL DESC SEC 32 TWP 74 RGE 28

COUNIY:MADISON
330TH ST & HERITAGE AVE

STATION NO. 61 12 1717 0991

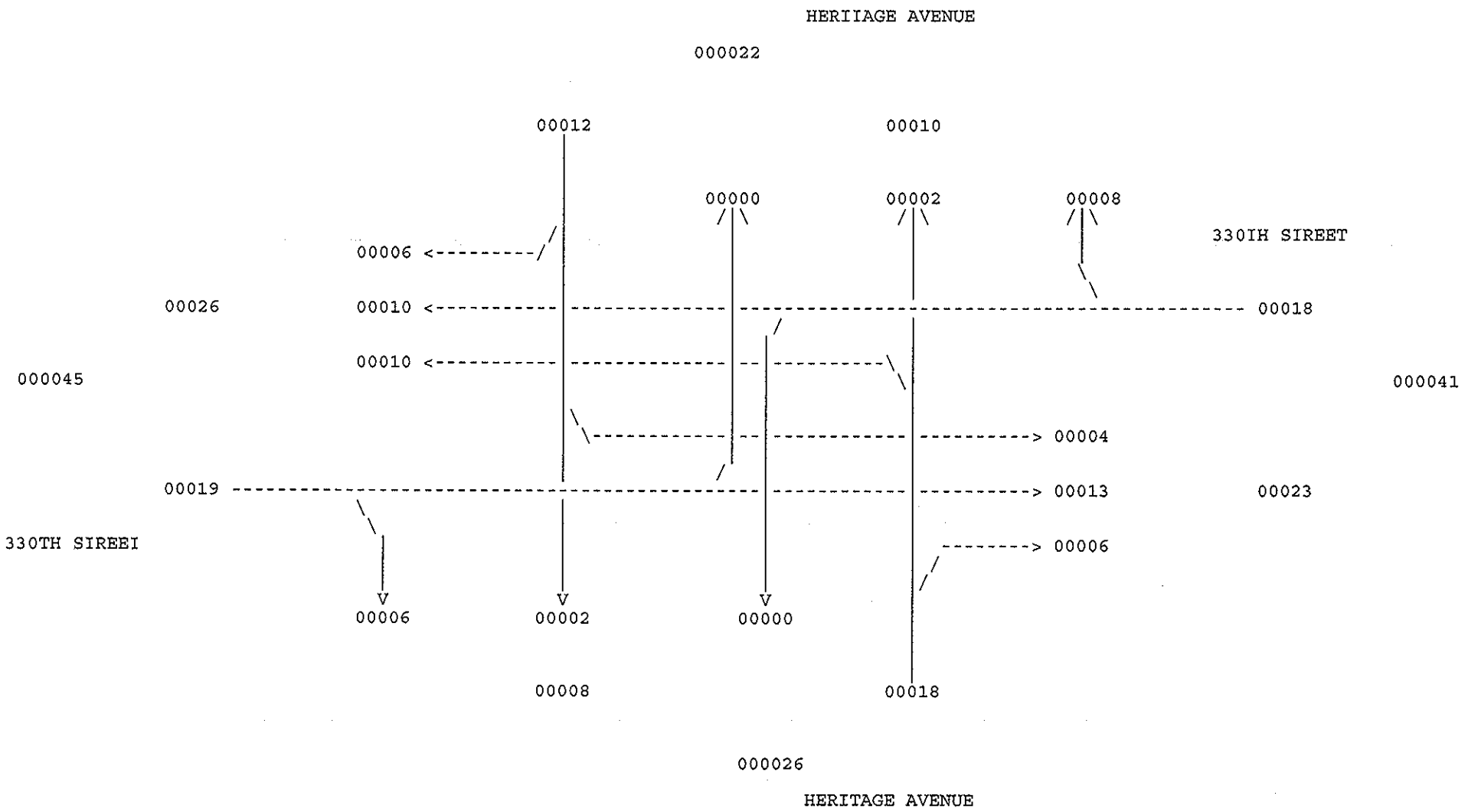

D1530926
COUNIY IOWNSHIP NODE LOCATION YEAR
61 12 1717 0991 2008

TURNING MOVEMENI SYSIEM
TRAFFIC COUNT SUMMARY
ALL VEHICLES

PRINTER ID: TPRI003W PAGE 0001
CITY:
COUNIY: MADISON

HOUR	******* NORTH LEG HERIIAGE AVENUE			*******	******* EASI LEG 330IH SIREEI			********	******* SOUIH LEG HERIIAGE AVENUE			*******	******* WEST LEG 330TH STREET			********
	RT	ST	LT	TOTAL	RI	ST	LI	IOTAL	LT	ST	RI	IOTAL	LT	ST	RI	IOTAL
07- 8AM	0	1	0	1	1	1	0	2	1	0	1	2	0	0	0	0
08- 9AM	0	0	0	0	0	2	0	2	1	1	0	2	0	0	1	1
11-12PM	2	0	0	2	0	0	0	0	0	0	0	0	0	0	0	0
12-1 PM	0	0	1	1	0	0	0	0	2	0	0	2	0	0	0	0
3- 4PM	0	0	0	0	2	0	0	2	0	0	1	1	0	2	1	3
4- 5PM	0	0	1	1	0	1	0	1	1	0	0	1	0	0	0	0
5- 6PM	1	0	0	1	1	1	0	2	0	0	1	1	0	5	1	6
TOTALS	3	1	2	6	4	5	0	9	5	1	3	9	0	7	3	10

STATION DISPLAYED
PF4 QUARTER HOUR PF5 CLASS PF7 BKWD PF8 FWD PF15 MAIN MENU PF21 SCREEN PRINI CLEAR EXII

D1530927
COUNIY IOWNSHIP NODE LOCAIION YEAR
61 12 1717 0991 2008

TURNING MOVEMENI SYSIEM
TRAFFIC COUNT SUMMARY
SINGLE UNIT TRUCKS

PRINIER ID: TPRI003W PAGE 0001
CITY:
COUNTY: MADISON

HOUR	******* NORIH LEG HERITAGE AVENUE			*******	******* EAST LEG 330TH SIREEI			********	******* SOUTH LEG HERITAGE AVENUE			*******	******* WEST LEG 330TH SIREEI			********
	RT	ST	LI	IOTAL	RT	ST	LT	TOTAL	LT	ST	RT	TOTAL	LT	ST	RI	TOIAL
7- 8AM	0	0	0	0	0	0	0	0	0	0	0	0	0	0	0	0
8- 9AM	0	0	0	0	0	0	0	0	0	0	0	0	0	0	0	0
11-12PM	1	0	0	1	0	0	0	0	0	0	0	0	0	0	0	0
12- 1PM	0	0	0	0	0	0	0	0	0	0	0	0	0	0	0	0
3- 4PM	0	0	0	0	0	0	0	0	0	0	0	0	0	0	0	0
4- 5PM	0	0	0	0	0	0	0	0	0	0	0	0	0	0	0	0
5- 6PM	0	0	0	0	0	0	0	0	0	0	0	0	0	0	0	0
IOIALS	1	0	0	1	0	0	0	0	0	0	0	0	0	0	0	0

STAIION DISPLAYED
PF4 QUARTER HOUR PF5 CLASS PF7 BKWD PF8 FWD PF15 MAIN MENU PF21 SCREEN PRINI CLEAR EXIT

D1530928
COUNTY TOWNSHIP NODE LOCATION YEAR
61 12 1717 0991 2008

TURNING MOVEMENT SYSTEM
TRAFFIC COUNT SUMMARY
COMBINATION TRUCKS

PRINTER ID: TPRT003W PAGE 0001
CITY:
COUNTY: MADISON

HOUR	******* NORTH LEG HERITAGE AVENUE			*******	******* EAST LEG 330TH STREET			********	******* SOUTH LEG HERITAGE AVENUE			*******	******* WEST LEG 330TH STREET			********
	RT	ST	LT	TOTAL	RT	ST	LT	TOTAL	LT	ST	RT	TOTAL	LT	ST	RT	TOTAL
7- 8AM	0	1	0	1	0	0	0	0	0	0	0	0	0	0	0	0
8- 9AM	0	0	0	0	0	0	0	0	0	0	0	0	0	0	0	0
11-12PM	0	0	0	0	0	0	0	0	0	0	0	0	0	0	0	0
12- 1PM	0	0	0	0	0	0	0	0	0	0	0	0	0	0	0	0
3- 4PM	0	0	0	0	0	0	0	0	0	0	0	0	0	0	0	0
4- 5PM	0	0	0	0	0	0	0	0	0	0	0	0	0	0	0	0
5- 6PM	0	0	0	0	0	0	0	0	0	0	0	0	0	0	0	0
TOTALS	0	1	0	1	0	0	0	0	0	0	0	0	0	0	0	0

STATION DISPLAYED
PF4 QUARTER HOUR PF5 CLASS PF7 BKWD PF8 FWD PF15 MAIN MENU PF21 SCREEN PRINT CLEAR EXIT