DATE: 08-10-2010

IOWA DEPARIMENI OF TRANSPORTATION
VEHICULAR TURNING MOVEMENTS
ANNUAL AVERAGE DAILY TRAFFIC - YEAR 2008
LEGAL DESC SEC 29 TWP 69 RGE 43

COUNIY:FREMONI
I 29 & 200 ST

SIAIION NO. 36 31 3321 7991

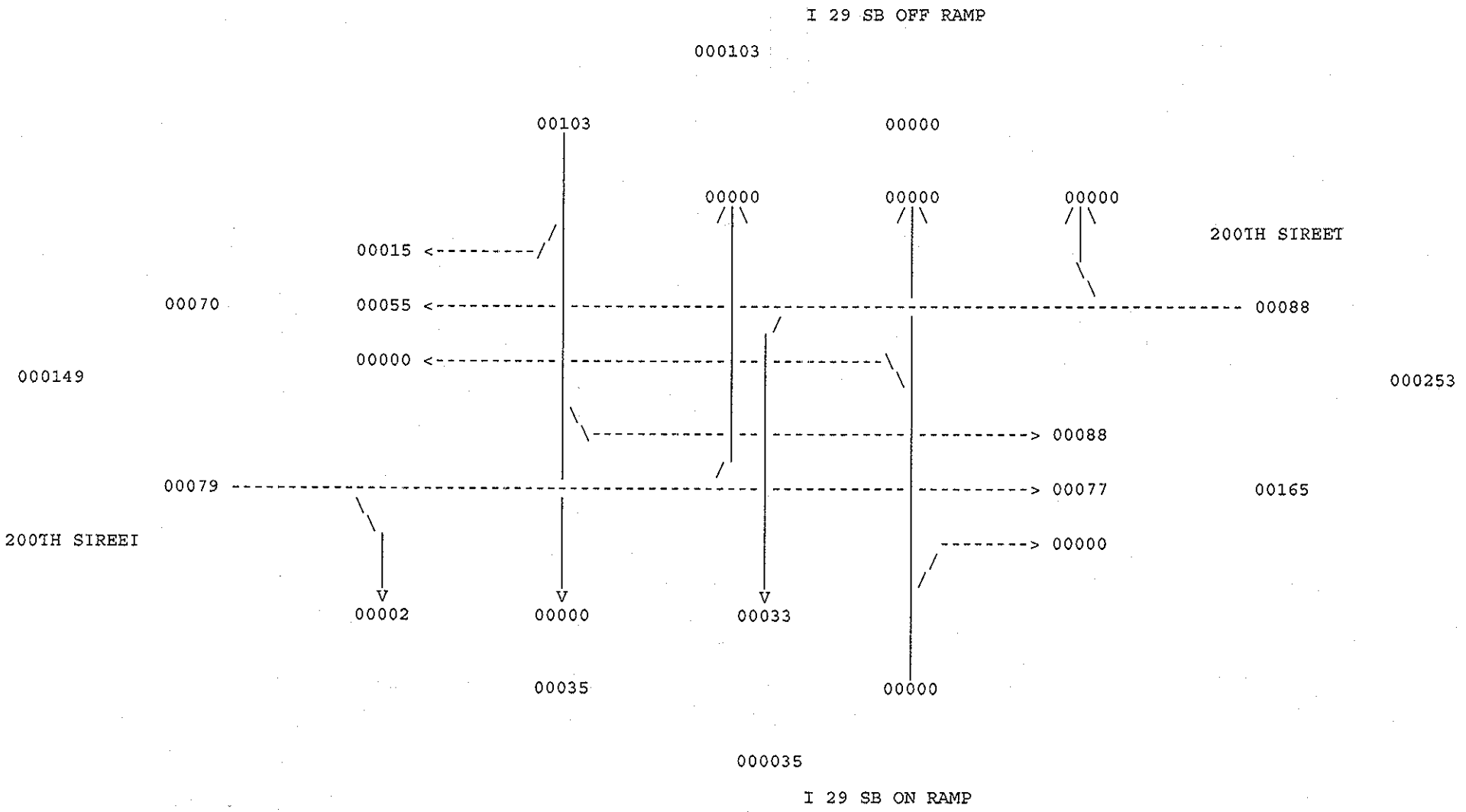

D1530926
COUNIY TOWNSHIP NODE LOCATION YEAR
36 31 3321 7991 2008

TURNING MOVEMENT SYSTEM
TRAFFIC COUNT SUMMARY
ALL VEHICLES

PRINIER ID: IPRI003W PAGE 0001
CITY:
COUNIY: FREMONT

HOUR	******* NORTH LEG I 29 SB OFF RAMP			*******	******* EAST LEG 200IH SIREET			********	******* SOUTH LEG I 29 SB ON RAMP			*******	******* WEST LEG 200TH STREET			********
	RI	ST	LI	IOTAL	RI	ST	LT	TOIAL	LI	ST	RI	TOIAL	LT	ST	RI	IOIAL
07- 8AM	0	0	3	3	0	1	4	5	0	0	0	0	0	3	0	3
08- 9AM	0	0	0	0	0	1	2	3	0	0	0	0	0	4	0	4
11-12PM	0	0	4	4	0	4	0	4	0	0	0	0	0	6	1	7
12-1 PM	0	0	6	6	0	2	4	6	0	0	0	0	0	3	0	3
3- 4PM	1	0	10	11	0	4	2	6	0	0	0	0	0	6	0	6
4- 5PM	0	0	9	9	0	5	1	6	0	0	0	0	0	8	0	8
5- 6PM	6	0	8	14	0	8	2	10	0	0	0	0	0	5	0	5
IOIALS	7	0	40	47	0	25	15	40	0	0	0	0	0	35	1	36

STATION DISPLAYED
PF4 QUARTER HOUR PF5 CLASS PF7 BKWD PF8 FWD PF15 MAIN MENU PF21 SCREEN PRINI CLEAR EXII

D1530927
COUNTY TOWNSHIP NODE LOCATION YEAR
36 31 3321 7991 2008

TURNING MOVEMENT SYSTEM
TRAFFIC COUNT SUMMARY
SINGLE UNIT TRUCKS

PRINTER ID: TPRT003W PAGE 0001
CITY:
COUNTY: FREMONT

HOUR	******* NORTH LEG I 29 SB OFF RAMP			*******	******* EAST LEG 200TH STREET			********	******* SOUTH LEG I 29 SB ON RAMP			*******	******* WEST LEG 200TH STREET			********
	RT	ST	LT	TOTAL	RT	ST	LT	TOTAL	LT	ST	RT	TOTAL	LT	ST	RT	TOTAL
7- 8AM	0	0	0	0	0	0	0	0	0	0	0	0	0	0	0	0
8- 9AM	0	0	0	0	0	0	0	0	0	0	0	0	0	0	0	0
11-12PM	0	0	1	1	0	1	0	1	0	0	0	0	0	0	0	0
12- 1PM	0	0	1	1	0	0	1	1	0	0	0	0	0	0	0	0
3- 4PM	0	0	1	1	0	2	0	2	0	0	0	0	0	0	0	0
4- 5PM	0	0	1	1	0	1	0	1	0	0	0	0	0	0	0	0
5- 6PM	3	0	0	3	0	0	1	1	0	0	0	0	0	0	0	0
TOTALS	3	0	4	7	0	4	2	6	0	0	0	0	0	0	0	0

STATION DISPLAYED
PF4 QUARTER HOUR PF5 CLASS PF7 BKWD PF8 FWD PF15 MAIN MENU PF21 SCREEN PRINT CLEAR EXIT

D1530928
COUNIY IOWNSHIP NODE LOCATION YEAR
36 31 3321 7991 2008

IURNING MOVEMENT SYSIEM
TRAFFIC COUNT SUMMARY
COMBINATION TRUCKS

PRINTER ID: IPRI003W PAGE 0001
CITY:
COUNTY: FREMONT

HOUR	******* NORTH LEG I 29 SB OFF RAMP			*******	******* EAST LEG 200TH SIREEI			********	******* SOUTH LEG I 29 SB ON RAMP			*******	******* WESI LEG 200IH SIREEI			********
	RI	ST	LT	TOIAL	RT	ST	LT	TOTAL	LT	ST	RT	TOTAL	LI	ST	RT	TOIAL
7- 8AM	0	0	1	1	0	0	2	2	0	0	0	0	0	0	0	0
8- 9AM	0	0	0	0	0	0	1	1	0	0	0	0	0	0	0	0
11-12PM	0	0	0	0	0	0	0	0	0	0	0	0	0	0	0	0
12- 1PM	0	0	0	0	0	0	1	1	0	0	0	0	0	0	0	0
3- 4PM	0	0	0	0	0	0	0	0	0	0	0	0	0	0	0	0
4- 5PM	0	0	0	0	0	0	0	0	0	0	0	0	0	0	0	0
5- 6PM	0	0	0	0	0	0	0	0	0	0	0	0	0	0	0	0
TOIALS	0	0	1	1	0	0	4	4	0	0	0	0	0	0	0	0

STATION DISPLAYED
PF4 QUARTER HOUR PF5 CLASS PF7 BKWD PF8 FWD PF15 MAIN MENU PF21 SCREEN PRINT CLEAR EXII