DATE: 08-04-2010

IOWA DEPARTMENI OF TRANSPORIATION
VEHICULAR TURNING MOVEMENTS
ANNUAL AVERAGE DAILY TRAFFIC - YEAR 2008
IN ATLANTIC

COUNTY:CASS
IA 83 & 5TH SI

SIAIION NO. 15 32 8324 0991

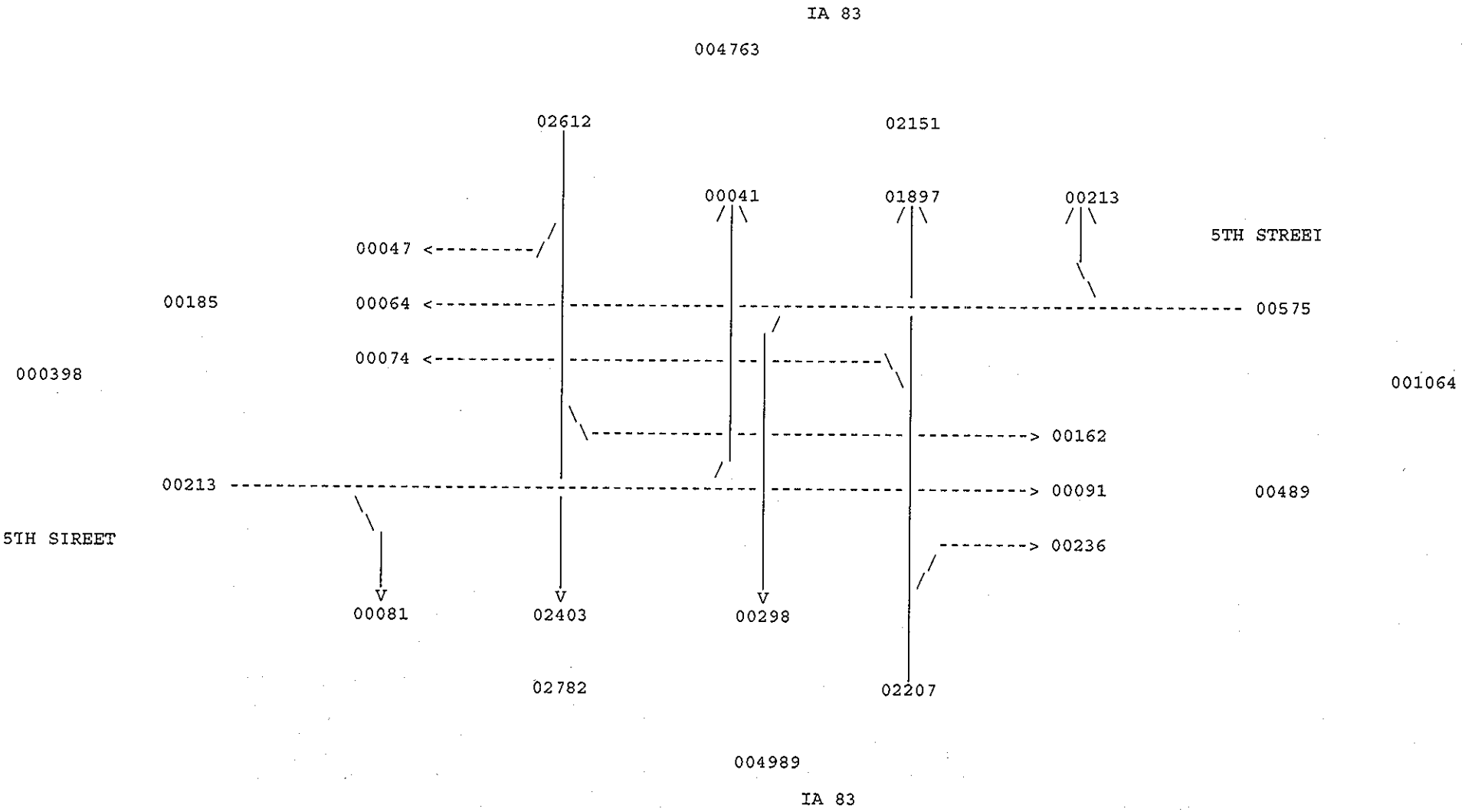

D1530926
COUNTY TOWNSHIP NODE LOCATION YEAR
15 32 8324 0991 2008

TURNING MOVEMENT SYSTEM
TRAFFIC COUNT SUMMARY
ALL VEHICLES

PRINTER ID: TPRT003W PAGE 0001
CITY: ATLANTIC
COUNTY: CASS

HOUR	******* NORTH LEG ******* IA 83				******* EAST LEG ******** 5TH STREET				******* SOUTH LEG ******* IA 83				******* WEST LEG ******** 5TH STREET			
	RT	ST	LT	TOTAL	RT	ST	LT	TOTAL	LT	ST	RT	TOTAL	LT	ST	RT	TOTAL
07- 8AM	0	107	5	112	4	1	10	15	6	135	10	151	3	4	3	10
08- 9AM	4	117	7	128	11	2	12	25	3	106	13	122	1	4	7	12
11-12PM	4	143	11	158	17	5	31	53	4	123	14	141	2	2	2	6
12-1 PM	3	211	16	230	24	4	20	48	2	172	23	197	4	8	8	20
3- 4PM	8	243	21	272	25	5	25	55	4	169	25	198	4	9	8	21
4- 5PM	4	258	14	276	18	6	34	58	9	170	18	197	5	8	6	19
5- 6PM	2	195	12	209	14	11	26	51	11	131	22	164	3	13	9	25
TOTALS	25	1274	86	1385	113	34	158	305	39	1006	125	1170	22	48	43	113

STATION DISPLAYED
PF4 QUARTER HOUR PF5 CLASS PF7 BKWD PF8 FWD PF15 MAIN MENU PF21 SCREEN PRINT CLEAR EXIT

D1530927

COUNTY	IOWNSHIP	NODE	LOCATION	YEAR
15	32	8324	0991	2008

TURNING MOVEMENT SYSIEM
IRAFFIC COUNT SUMMARY
SINGLE UNII IRUCKS

PRINIER ID: IPRI003W PAGE 0001
CITY: ATLANTIC
COUNTY: CASS

HOUR	******* NORIH LEG ******* IA 83				******* EASI LEG ******** 5IH SIREET				******* SOUTH LEG ******* IA 83				******* WESI LEG ******** 5IH SIREET			
	RI	ST	LT	TOIAL	RT	ST	LI	TOTAL	LI	ST	RT	TOTAL	LT	SI	RT	TOIAL
7- 8AM	0	7	0	7	0	0	0	0	1	4	0	5	0	0	0	0
8- 9AM	0	9	0	9	0	0	0	0	0	4	0	4	0	0	0	0
11-12PM	1	6	0	7	0	0	0	0	0	5	0	5	0	0	1	1
12- 1PM	0	6	0	6	0	0	1	1	0	4	0	4	0	2	0	2
3- 4PM	0	2	0	2	0	0	0	0	0	6	1	7	0	0	0	0
4- 5PM	1	7	0	8	1	0	1	2	1	1	0	2	0	0	0	0
5- 6PM	0	4	0	4	2	0	0	2	0	0	0	0	0	0	0	0
IOTALS	2	41	0	43	3	0	2	5	2	24	1	27	0	2	1	3

STATION DISPLAYED
PF4 QUARIER HOUR PF5 CLASS PF7 BKWD PF8 FWD PF15 MAIN MENU PF21 SCREEN PRINT CLEAR EXIT

D1530928
COUNIY TOWNSHIP NODE LOCATION YEAR
15 32 8324 0991 2008

IURNING MOVEMENI SYSTEM
TRAFFIC COUNT SUMMARY
COMBINATION TRUCKS

PRINTER ID: TPRT003W PAGE 0001
CITY: ATLANIIC
COUNIY: CASS

HOUR	******* NORTH LEG ******* IA 83				******* EAST LEG ******** 5TH SIREET				******* SOUTH LEG ******* IA 83				******* WESI LEG ******** 5TH STREET			
	RI	SI	LI	TOTAL	RT	SI	LT	IOIAL	LT	ST	RI	TOIAL	LT	ST	RT	TOTAL
7- 8AM	0	4	0	4	0	0	0	0	0	3	0	3	0	0	0	0
8- 9AM	0	2	0	2	0	0	0	0	0	0	0	0	0	0	0	0
11-12PM	0	2	0	2	0	0	0	0	0	0	0	0	0	0	0	0
12- 1PM	0	2	0	2	0	0	0	0	0	1	0	1	0	0	0	0
3- 4PM	0	2	0	2	0	0	0	0	0	5	0	5	0	0	0	0
4- 5PM	0	1	0	1	0	0	0	0	0	2	0	2	0	0	0	0
5- 6PM	0	1	0	1	0	0	0	0	0	1	0	1	0	0	0	0
IOIALS	0	14	0	14	0	0	0	0	0	12	0	12	0	0	0	0

STAIION DISPLAYED
PF4 QUARTER HOUR PF5 CLASS PF7 BKWD PF8 FWD PF15 MAIN MENU PF21 SCREEN PRINT CLEAR EXIT