DATE: 09-01-2010

IOWA DEPARTMENT OF TRANSPORTAIION
VEHICULAR TURNING MOVEMENTS
ANNUAL AVERAGE DAILY TRAFFIC - YEAR 2006
LEGAL DESC SEC 30 TWP 68 RGE 10

COUNTY:VAN BUREN
IA 2 & GOLD AVE

STAIION NO 89 22 2101 0991

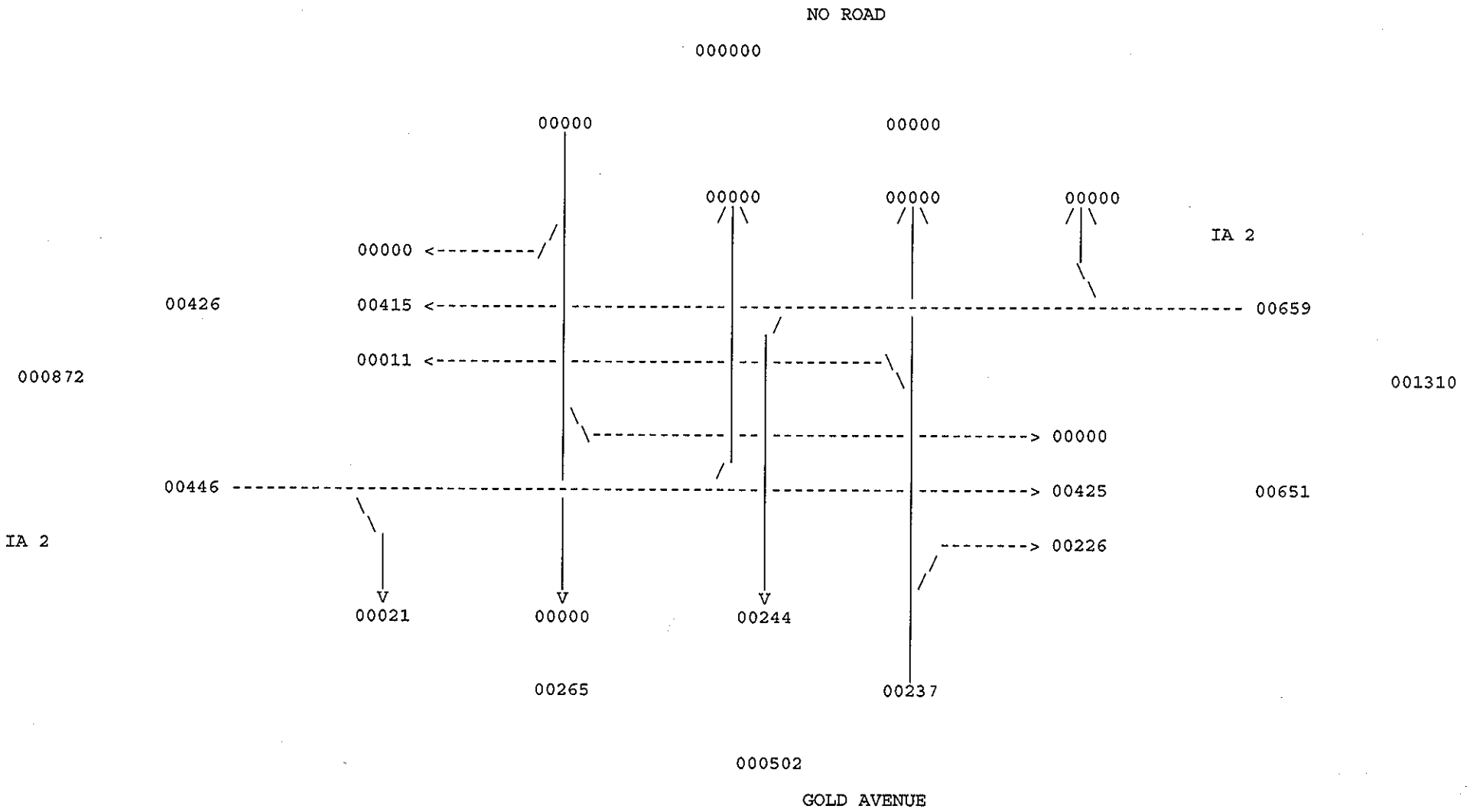

D1530926

COUNTY	TOWNSHIP	NODE	LOCATION	YEAR
89	22	2101	0991	2006

TURNING MOVEMENT SYSTEM
TRAFFIC COUNT SUMMARY
ALL VEHICLES

PRINTER ID: TPRI003W PAGE 0001
CITY:
COUNTY: VAN BUREN

HOUR	******* NORTH LEG ******* NO ROAD				******* EAST LEG ******** IA 2				******* SOUTH LEG ******* GOLD AVENUE				******* WEST LEG ******** IA 2			
	RT	ST	LT	TOTAL	RT	ST	LT	TOTAL	LT	ST	RT	TOTAL	LT	ST	RT	TOTAL
07- 8AM	0	0	0	0	0	28	12	40	0	0	5	5	0	23	0	23
08- 9AM	0	0	0	0	0	24	9	33	0	0	15	15	0	25	1	26
09-10AM	0	0	0	0	0	27	15	42	1	0	15	16	0	39	4	43
11-12PM	0	0	0	0	0	28	18	46	2	0	15	17	0	35	2	37
12-1 PM	0	0	0	0	0	17	19	36	2	0	19	21	0	30	3	33
3- 4PM	0	0	0	0	0	51	26	77	0	0	24	24	0	30	0	30
4- 5PM	0	0	0	0	0	29	27	56	1	0	22	23	0	28	2	30
5- 6PM	0	0	0	0	0	31	12	43	0	0	13	13	0	31	0	31
TOTALS	0	0	0	0	0	235	138	373	6	0	128	134	0	241	12	253

STATION DISPLAYED
PF4 QUARTER HOUR PF5 CLASS PF7 BKWD PF8 FWD PF15 MAIN MENU PF21 SCREEN PRINT CLEAR EXIT

D1530927
COUNIY TOWNSHIP NODE LOCATION YEAR
89 22 2101 0991 2006

IURNING MOVEMENT SYSIEM
TRAFFIC COUNT SUMMARY
SINGLE UNIT TRUCKS

PRINTER ID: IPRT003W PAGE 0001
CITY:
COUNIY: VAN BUREN

HOUR	******* NORTH LEG ******* NO ROAD				******* EAST LEG ******** IA 2				******* SOUTH LEG ******* GOLD AVENUE				******* WEST LEG ******** IA 2			
	RT	SI	LT	IOIAL	RT	SI	LT	TOTAL	LT	ST	RT	TOTAL	LT	ST	RI	TOTAL
7- 8AM	0	0	0	0	0	1	2	3	0	0	0	0	0	2	0	2
8- 9AM	0	0	0	0	0	1	0	1	0	0	2	2	0	1	0	1
9-10AM	0	0	0	0	0	3	2	5	0	0	1	1	0	6	3	9
11-12PM	0	0	0	0	0	5	1	6	0	0	2	2	0	2	0	2
12- 1PM	0	0	0	0	0	1	2	3	0	0	1	1	0	1	0	1
3- 4PM	0	0	0	0	0	3	2	5	0	0	1	1	0	3	0	3
4- 5PM	0	0	0	0	0	1	1	2	0	0	5	5	0	0	1	1
5- 6PM	0	0	0	0	0	1	1	2	0	0	0	0	0	0	0	0
TOTALS	0	0	0	0	0	16	11	27	0	0	12	12	0	15	4	19

STATION DISPLAYED
PF4 QUARTER HOUR PF5 CLASS PF7 BKWD PF8 FWD PF15 MAIN MENU PF21 SCREEN PRINT CLEAR EXIT

D1530928

COUNTY	TOWNSHIP	NODE	LOCATION	YEAR
89	22	2101	0991	2006

TURNING MOVEMENT SYSTEM
TRAFFIC COUNT SUMMARY
COMBINATION TRUCKS

PRINTER ID: TPRI003W PAGE 0001
CITY:
COUNTY: VAN BUREN

HOUR	******* NORTH LEG NO ROAD RT	ST	LI	TOTAL	******* EAST LEG IA 2 RT	ST	LI	TOTAL	******* SOUTH LEG GOLD AVENUE LT	ST	RI	TOTAL	******* WEST LEG IA 2 LT	SI	RT	TOTAL
7- 8AM	0	0	0	0	0	10	0	10	0	0	0	0	0	4	0	4
8- 9AM	0	0	0	0	0	3	2	5	0	0	0	0	0	6	0	6
9-10AM	0	0	0	0	0	5	0	5	0	0	0	0	0	16	1	17
11-12PM	0	0	0	0	0	5	0	5	0	0	0	0	0	14	0	14
12- 1PM	0	0	0	0	0	6	1	7	0	0	0	0	0	10	0	10
3- 4PM	0	0	0	0	0	15	1	16	0	0	1	1	0	12	0	12
4- 5PM	0	0	0	0	0	3	1	4	1	0	1	2	0	5	0	5
5- 6PM	0	0	0	0	0	7	1	8	0	0	0	0	0	10	0	10
TOTALS	0	0	0	0	0	54	6	60	1	0	2	3	0	77	1	78

STATION DISPLAYED
PF4 QUARTER HOUR PF5 CLASS PF7 BKWD PF8 FWD PF15 MAIN MENU PF21 SCREEN PRINT CLEAR EXIT