# EPOXY COATED REINFORCING BAR LIST

ONE SUPERSTRUCTURE AND TWO ABUTMENTS

## BRIDGE LENGTH

| BAR | LOCATION | SHAPE | 160'-0 NO. | 160'-0 LENGTH | 160'-0 WEIGHT | 180'-0 NO. | 180'-0 LENGTH | 180'-0 WEIGHT | 200'-0 NO. | 200'-0 LENGTH | 200'-0 WEIGHT | 220'-0 NO. | 220'-0 LENGTH | 220'-0 WEIGHT |
|---|---|---|---|---|---|---|---|---|---|---|---|---|---|---|
| 6a1 | SLAB TRANSVERSE, TOP & BOTTOM | | 373 | 42'-10 | 23,998 | 421 | 42'-10 | 27,086 | 469 | 42'-10 | 30,174 | 517 | 42'-10 | 33,262 |
| 6a2 | SLAB TRANSVERSE, TOP-ENDS | | 16 | VARIES | 528 | 16 | VARIES | 528 | 16 | VARIES | 528 | 16 | VARIES | 528 |
| 6a3 | SLAB TRANSVERSE, BOTTOM-ENDS | | 18 | VARIES | 594 | 18 | VARIES | 594 | 18 | VARIES | 594 | 18 | VARIES | 594 |
| 6b1 | SLAB LONGITUDINAL TOP & BOTTOM | | 485 | 34'-6 | 25,133 | 485 | 38'-6 | 28,047 | 582 | 35'-10 | 31,325 | 582 | 39'-2 | 34,239 |
| 5d2 | ABUTMENT DIAPHRAGM, LONGITUDINAL | | 16 | 21'-5 | 358 | 16 | 21'-5 | 358 | 16 | 21'-5 | 358 | 16 | 21'-5 | 358 |
| 5d5 | ABUTMENT DIAPHRAGM, LONGITUDINAL - END | | 16 | 5'-0 | 84 | 16 | 5'-0 | 84 | 16 | 5'-0 | 84 | 16 | 5'-0 | 84 |
| 5d6 | ABUTMENT DIAPHRAGM, LONGITUDINAL - B.F. | | 16 | 22'-10 | 382 | 16 | 22'-10 | 382 | 16 | 22'-10 | 382 | 16 | 22'-10 | 382 |
| 5d7 | PAVING NOTCH, LONGITUDINAL | | 8 | 22'-9 | 190 | 8 | 22'-9 | 190 | 8 | 22'-9 | 190 | 8 | 22'-9 | 190 |
| 5d8 | ABUT. DIAPHRAGM WING EXT. LONGIT. | | - | - | - | - | - | - | - | - | - | - | - | - |
| 5d9 | ABUT. DIAPHRAGM WING EXT. LONGIT. | | - | - | - | - | - | - | - | - | - | - | - | - |
| 8f1 | ABUTMENT FOOTING LONGITUDINAL - B.F. | | 36 | 24'-2 | 2323 | 36 | 24'-2 | 2323 | 36 | 24'-2 | 2323 | 36 | 24'-2 | 2323 |
| 8f3 | ABUTMENT EXTENSION LONGITUDINAL | | - | - | - | - | - | - | - | - | - | - | - | - |
| 8f4 | ABUTMENT EXTENSION LONGITUDINAL | | - | - | - | - | - | - | - | - | - | - | - | - |
| 8g1 | ABUTMENT VERTICAL - B.F. | | 136 | 6'-5 | 2331 | 136 | 6'-5 | 2331 | 136 | 6'-8 | 2421 | 136 | 6'-11 | 2512 |
| 8g3 | ABUTMENT DIAPHRAGM VERTICAL - B.F. | | 62 | 15'-3 | 2525 | 62 | 15'-3 | 2525 | 62 | 15'-3 | 2525 | 62 | 15'-3 | 2525 |
| 6g4 | ABUTMENT DIAPHRAGM WING EXT. VERT. | | - | - | - | - | - | - | - | - | - | - | - | - |
| 5h1 | WING HORIZONTAL BACK FACE | | 28 | 6'-8 | 195 | 28 | 6'-8 | 195 | 28 | 6'-8 | 195 | 28 | 6'-8 | 195 |
| 5h2 | WING HORIZONTAL BACK FACE | | 56 | 4'-11 | 288 | 56 | 4'-11 | 288 | 56 | 4'-11 | 288 | 56 | 4'-11 | 288 |
| 5h3 | WING HORIZONTAL TRAFFIC FACE | | 28 | 6'-9 | 198 | 28 | 6'-9 | 198 | 28 | 6'-9 | 198 | 28 | 6'-9 | 198 |
| 5h4 | WING HORIZONTAL TRAFFIC FACE | | - | - | - | - | - | - | - | - | - | - | - | - |
| 5j1 | TOP OF SLAB, TRANSVERSE, AT RAIL | | 386 | 6'-3 | 2517 | 434 | 6'-3 | 2830 | 482 | 6'-3 | 3143 | 530 | 6'-3 | 3455 |
| 5k1 | PAVING NOTCH, TRANSVERSE | | 64 | 4'-3 | 284 | 64 | 4'-3 | 284 | 64 | 4'-3 | 284 | 64 | 4'-3 | 284 |
| 5k2 | PAVING NOTCH, TRANSVERSE | | 64 | 3'-5 | 229 | 64 | 3'-5 | 229 | 64 | 3'-5 | 229 | 64 | 3'-5 | 229 |
| 5p1 | ABUTMENT HOOPS | | 140 | 10'-6 | 1534 | 140 | 10'-6 | 1534 | 140 | 10'-6 | 1534 | 128 | 10'-6 | 1402 |
| 5p2 | ABUTMENT HOOPS AT ENDS | | 8 | 10'-8 | 90 | 8 | 10'-8 | 90 | 8 | 10'-8 | 90 | 8 | 10'-8 | 90 |
| 6p3 | ABUTMENT BOTTOM AT PILES | | 32 | 6'-8 | 321 | 32 | 6'-8 | 321 | 32 | 6'-8 | 321 | 36 | 6'-8 | 361 |
| 5p4 | ABUTMENT EXTENSION HOOPS | | - | - | - | - | - | - | - | - | - | - | - | - |
| 5s1 | WING, VERTICAL | | 64 | 5'-7 | 373 | 64 | 5'-7 | 373 | 64 | 5'-7 | 373 | 64 | 6'-2 | 412 |
| 4t1 | UNDER BEAMS AT ABUTMENTS | | 12 | 4'-7 | 37 | 12 | 4'-7 | 37 | 12 | 4'-7 | 37 | 12 | 4'-7 | 37 |
| 4t2 | ABUTMENT DIAPHRAGM, LONGITUDINAL F.F. | | 36 | 7'-6 | 181 | 36 | 7'-6 | 181 | 36 | 7'-6 | 181 | 36 | 7'-6 | 181 |
| | * PILE SPIRAL - NO. 2 BAR | | 16 | 38'-6 | 103 | 16 | 38'-6 | 103 | 16 | 38'-6 | 103 | 18 | 38'-6 | 116 |
| | * SPIRAL SPACER $L\frac{7}{8}\times\frac{7}{8}\times\frac{1}{8}\times$ 0.70 | | 48 | 1'-10 | 62 | 48 | 1'-10 | 62 | 48 | 1'-10 | 62 | 54 | 1'-10 | 70 |
| | SEE BARRIER RAIL SHEET RS40-090-10 | | | | 9115 | | | 10,023 | | | 10,897 | | | 11,810 |
| | REINFORCING STEEL EPOXY COATED (LBS.) | | TOTAL (LBS.) | | 73,973 | TOTAL (LBS.) | | 81,196 | TOTAL (LBS.) | | 88,839 | TOTAL (LBS.) | | 96,125 |

| BAR | 240'-0 NO. | 240'-0 LENGTH | 240'-0 WEIGHT | 260'-0 NO. | 260'-0 LENGTH | 260'-0 WEIGHT | 280'-0 NO. | 280'-0 LENGTH | 280'-0 WEIGHT | 300'-0 NO. | 300'-0 LENGTH | 300'-0 WEIGHT | 320'-0 NO. | 320'-0 LENGTH | 320'-0 WEIGHT | 340'-0 NO. | 340'-0 LENGTH | 340'-0 WEIGHT |
|---|---|---|---|---|---|---|---|---|---|---|---|---|---|---|---|---|---|---|
| 6a1 | 565 | 42'-10 | 36,350 | 613 | 42'-10 | 39,438 | 661 | 42'-10 | 42,526 | 709 | 42'-10 | 45,614 | 757 | 42'-10 | 48,703 | 805 | 42'-10 | 51,791 |
| 6a2 | 16 | VARIES | 528 | 16 | VARIES | 528 | 16 | VARIES | 528 | 16 | VARIES | 528 | 16 | VARIES | 528 | 16 | VARIES | 528 |
| 6a3 | 18 | VARIES | 594 | 18 | VARIES | 594 | 18 | VARIES | 594 | 18 | VARIES | 594 | 18 | VARIES | 594 | 18 | VARIES | 594 |
| 6b1 | 679 | 36'-9 | 37,480 | 679 | 39'-8 | 40,455 | 776 | 37'-6 | 43,709 | 776 | 40'-0 | 46,623 | 873 | 38'-0 | 49,828 | 970 | 36'-6 | 53,179 |
| 5d2 | 16 | 21'-5 | 358 | 16 | 21'-5 | 358 | 16 | 21'-5 | 358 | 16 | 21'-5 | 358 | 16 | 21'-5 | 358 | 16 | 21'-5 | 358 |
| 5d5 | 16 | 5'-0 | 84 | 16 | 5'-0 | 84 | 16 | 5'-0 | 84 | 16 | 5'-0 | 84 | 16 | 5'-0 | 84 | 16 | 5'-0 | 84 |
| 5d6 | 16 | 22'-10 | 382 | 16 | 22'-10 | 382 | 16 | 22'-10 | 382 | 16 | 22'-10 | 382 | 16 | 22'-10 | 382 | 16 | 22'-10 | 382 |
| 5d7 | 8 | 22'-9 | 190 | 8 | 22'-9 | 190 | 8 | 22'-9 | 190 | 8 | 22'-9 | 190 | 8 | 22'-9 | 190 | 8 | 22'-9 | 190 |
| 5d8 | - | - | - | - | - | - | - | - | - | - | - | - | - | - | - | 24 | 10'-9 | 269 |
| 5d9 | - | - | - | - | - | - | - | - | - | - | - | - | - | - | - | 24 | 10'-8 | 267 |
| 8f1 | 36 | 24'-2 | 2323 | 36 | 24'-2 | 2323 | 36 | 24'-2 | 2323 | 36 | 24'-2 | 2323 | 36 | 24'-2 | 2323 | 36 | 24'-2 | 2323 |
| 8f3 | - | - | - | - | - | - | - | - | - | - | - | - | - | - | - | 16 | 10'-2 | 435 |
| 8f4 | - | - | - | - | - | - | - | - | - | - | - | - | - | - | - | 16 | 8'-8 | 371 |
| 8g1 | 136 | 6'-11 | 2512 | 136 | 7'-1 | 2573 | 136 | 7'-2 | 2603 | 136 | 7'-2 | 2603 | 136 | 7'-2 | 2603 | 136 | 7'-6 | 2724 |
| 8g3 | 62 | 15'-3 | 2525 | 62 | 15'-3 | 2525 | 62 | 15'-3 | 2525 | 62 | 15'-3 | 2525 | 62 | 15'-3 | 2525 | 62 | 15'-3 | 2525 |
| 6g4 | - | - | - | - | - | - | - | - | - | - | - | - | - | - | - | 40 | 6'-0 | 361 |
| 5h1 | 28 | 6'-8 | 195 | 28 | 6'-8 | 195 | 28 | 6'-8 | 195 | 28 | 6'-8 | 195 | 28 | 6'-8 | 195 | 36 | 6'-8 | 251 |
| 5h2 | 56 | 4'-11 | 288 | 56 | 4'-11 | 288 | 56 | 4'-11 | 288 | 56 | 4'-11 | 288 | 56 | 4'-11 | 288 | 12 | 4'-11 | 62 |
| 5h3 | 28 | 6'-9 | 198 | 28 | 6'-9 | 198 | 28 | 6'-9 | 198 | 28 | 6'-9 | 198 | 28 | 6'-9 | 198 | 36 | 6'-9 | 254 |
| 5h4 | - | - | - | - | - | - | - | - | - | - | - | - | - | - | - | 12 | 4'-11 | 62 |
| 5j1 | 578 | 6'-3 | 3768 | 626 | 6'-3 | 4081 | 674 | 6'-3 | 4394 | 722 | 6'-3 | 4707 | 770 | 6'-3 | 5020 | 818 | 6'-3 | 5333 |
| 5k1 | 64 | 4'-3 | 284 | 64 | 4'-3 | 284 | 64 | 4'-3 | 284 | 64 | 4'-3 | 284 | 64 | 4'-3 | 284 | 64 | 4'-3 | 284 |
| 5k2 | 64 | 3'-5 | 229 | 64 | 3'-5 | 229 | 64 | 3'-5 | 229 | 64 | 3'-5 | 229 | 64 | 3'-5 | 229 | 64 | 3'-5 | 229 |
| 5p1 | 128 | 10'-6 | 1402 | 128 | 10'-6 | 1402 | 144 | 10'-6 | 1578 | 144 | 10'-6 | 1578 | 144 | 10'-6 | 1578 | 144 | 10'-6 | 1578 |
| 5p2 | 8 | 10'-8 | 90 | 8 | 10'-8 | 90 | 8 | 10'-8 | 90 | 8 | 10'-8 | 90 | 8 | 10'-8 | 90 | 8 | 10'-8 | 90 |
| 6p3 | 36 | 6'-8 | 361 | 36 | 6'-8 | 361 | 40 | 6'-8 | 401 | 40 | 6'-8 | 401 | 40 | 6'-8 | 401 | 40 | 6'-8 | 401 |
| 5p4 | - | - | - | - | - | - | - | - | - | - | - | - | - | - | - | 24 | 10'-8 | 267 |
| 5s1 | 64 | 6'-2 | 412 | 64 | 6'-2 | 412 | 64 | 6'-2 | 412 | 64 | 6'-2 | 412 | 64 | 6'-2 | 412 | 64 | 6'-11 | 462 |
| 4t1 | 12 | 4'-7 | 37 | 12 | 4'-7 | 37 | 12 | 4'-7 | 37 | 12 | 4'-7 | 37 | 12 | 4'-7 | 37 | 12 | 4'-7 | 37 |
| 4t2 | 36 | 7'-6 | 181 | 36 | 7'-6 | 181 | 36 | 7'-6 | 181 | 36 | 7'-6 | 181 | 36 | 7'-6 | 181 | 36 | 7'-6 | 181 |
| * PILE SPIRAL - NO. 2 BAR | 18 | 38'-6 | 116 | 18 | 38'-6 | 116 | 20 | 38'-6 | 129 | 20 | 38'-6 | 129 | 20 | 38'-6 | 129 | 24 | 38'-6 | 155 |
| * SPIRAL SPACER $L\frac{7}{8}\times\frac{7}{8}\times\frac{1}{8}\times$ 0.70 | 54 | 1'-10 | 70 | 54 | 1'-10 | 70 | 60 | 1'-10 | 77 | 60 | 1'-10 | 77 | 60 | 1'-10 | 77 | 72 | 1'-10 | 93 |
| SEE BARRIER RAIL SHEET RS40-090-10 | | | 12,691 | | | 13,602 | | | 14,474 | | | 15,390 | | | 16,283 | | | 17,671 |
| REINFORCING STEEL EPOXY COATED (LBS.) | TOTAL (LBS.) | | 103,648 | TOTAL (LBS.) | | 110,996 | TOTAL (LBS.) | | 118,789 | TOTAL (LBS.) | | 126,020 | TOTAL (LBS.) | | 133,520 | TOTAL (LBS.) | | 143,791 |

* EPOXY COATING NOT REQUIRED

## BENT BAR DETAILS

NOTE: ALL DIMENSIONS ARE OUT TO OUT.
D= PIN DIAMETER

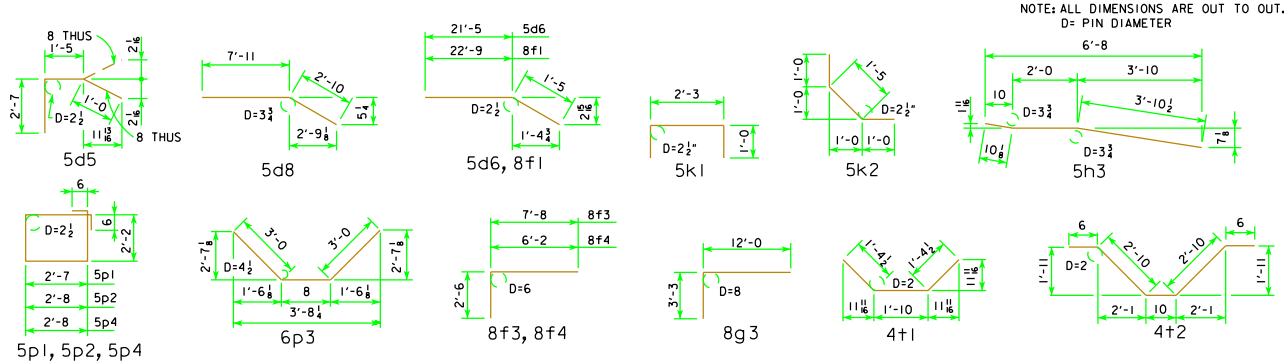


LATEST REVISION DATE

APPROVED BY BRIDGE ENGINEER

Iowa Department of Transportation
Highway Division

STANDARD DESIGN - 40' ROADWAY, 3 SPAN BRIDGES

ROLLED STEEL BEAM BRIDGES

JUNE, 2010

DECK AND ABUTMENT REINFORCEMENT 10° SKEW

RS40-037-10