## BEDDING CLASSES

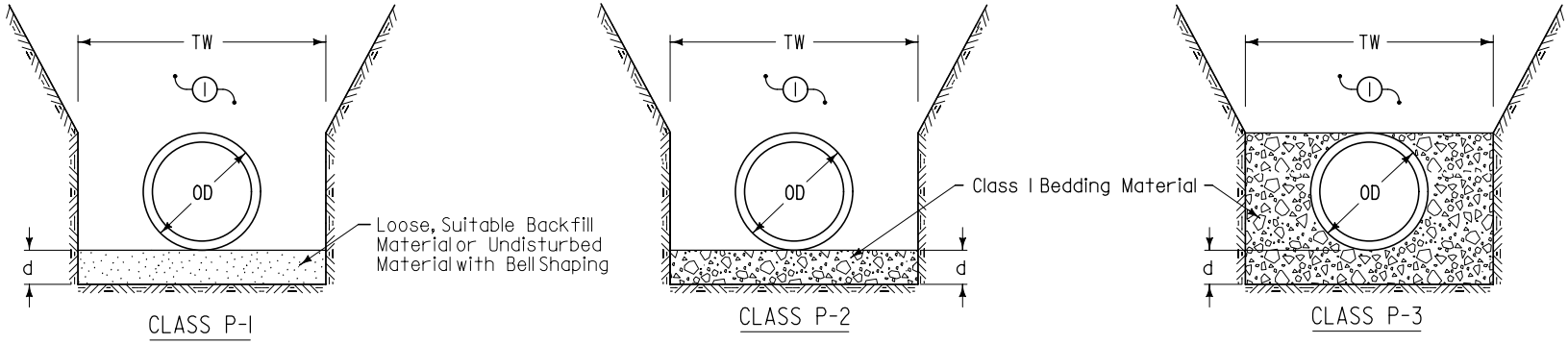


## ALLOWABLE BURY DEPTH

DUCTILE IRON, AWWA C151, CLASS 52

| Pipe Diameter (inches) | Class P-1 Bedding | Class P-2 Bedding | Class P-3 Bedding |
|---|---|---|---|
| 4 | 40' | 40' | 40' |
| 6 | 40' | 40' | 40' |
| 8 | 40' | 40' | 40' |
| 10 | 36' | 40' | 40' |
| 12 | 31' | 40' | 40' |
| 14 | 26' | 40' | 40' |
| 16 | 23' | 37' | 40' |
| 18 | 20' | 34' | 40' |
| 20 | 18' | 32' | 40' |
| 24 | 16' | 29' | 38' |
| 30 | 13' | 23' | 31' |
| 36 | 13' | 22' | 30' |
| 42 | 13' | 21' | 29' |
| 48 | 13' | 19' | 27' |
| 54 | 13' | 19' | 27' |

PVC, AWWA C900 & C905, DR18

| Pipe Diameter (inches) | Class P-1 Bedding | Class P-2 Bedding | Class P-3 Bedding |
|---|---|---|---|
| 4 | 19' | 23' | 40' |
| 6 | 19' | 23' | 40' |
| 8 | 19' | 23' | 40' |
| 10 | 19' | 23' | 40' |
| 12 | 19' | 23' | 40' |
| 14 | 19' | 23' | 40' |
| 16 | 19' | 23' | 40' |
| 18 | 19' | 23' | 40' |
| 20 | 19' | 23' | 40' |
| 24 | 19' | 23' | 40' |

(1) Place remainder of bedding and backfill material as specified in the contract documents.

### Key

OD = Outside diameter of pipe

TW = Trench width at top of pipe:
Min. = OD+18 inches OR 1.25xOD+12 inches
(whichever is greater)

d = Depth of bedding material below pipe:
Min. = OD/8 OR 4 inches
(whichever is greater)

| SUDAS | Iowa Department of Transportation | REVISION NEW 04-21-09 |
|---|---|---|
| FIGURE 3010.104 | STANDARD ROAD PLAN | SW-104 SHEET 1 of 1 |

REVISIONS: New.

SUDAS DIRECTOR — Deanna Maifield, DESIGN METHODS ENGINEER

**PRESSURE PIPE TRENCH BEDDING**

FIGURE 3010.104 SHEET 1 OF 1