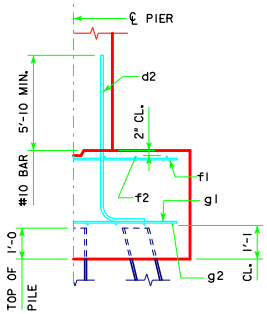

TYPICAL SECTION

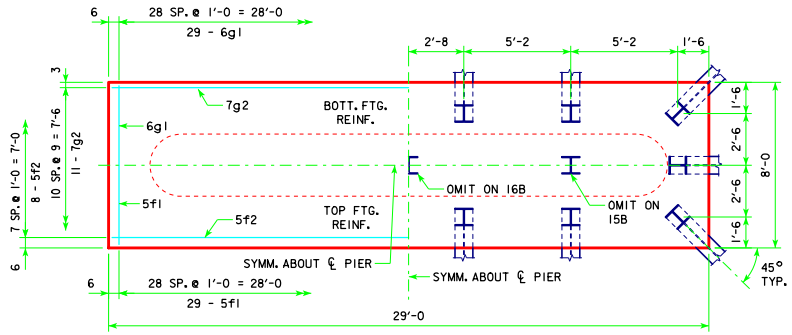

4'-0 x 8'-0 x 29'-0 FOR 15B, 16B & 17B

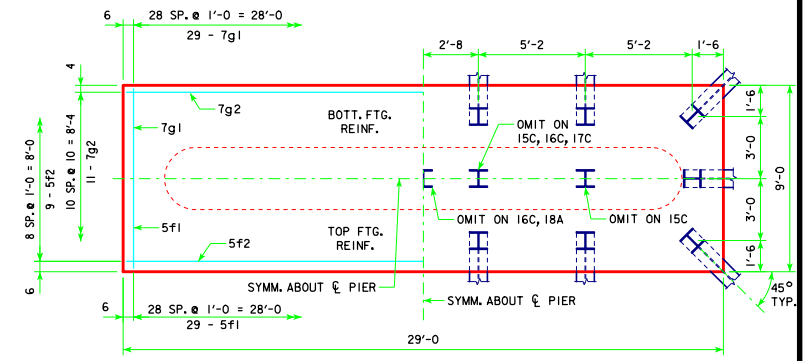

4'-0 x 9'-0 x 29'-0 FOR 15C, 16C, 17C & 18A

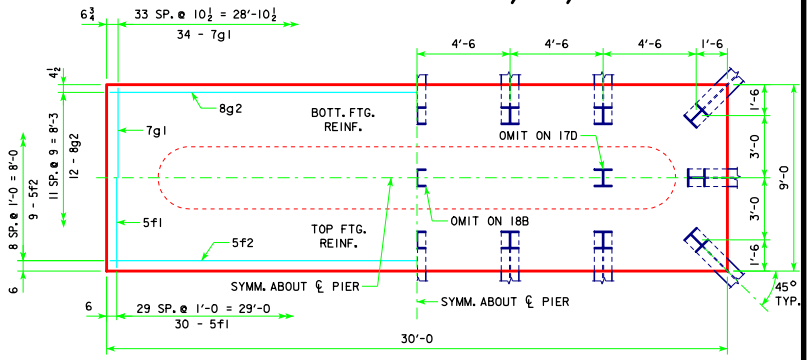

4'-0 x 9'-0 x 30'-0 FOR 17D & 18B

NOTE: THE REINFORCING STEEL QUANTITY IS TO BE INCLUDED ON THE SUMMARY QUANTITIES SHEET IN THE PLAN.

NOTE: THE CONCRETE QUANTITY IS TO BE INCLUDED ON THE SUMMARY QUANTITIES SHEET IN THE PLAN.

NOTE: THE PILE TYPE IS TO BE INCLUDED ON THE SUMMARY QUANTITIES SHEET IN THE PLAN.

H IN FT.	℄ - ℄ ABUT. BRG.	PILING (HP10x57) NO. & LAYOUT	PILING (HP10x57) (1) LRFD PU, STRENGTH I DES. LOAD (KIPS)	FOOTING SIZE
25 TO 27	201'-4	15B	217	4' x 8' x 29'
	213'-10	16B	210	
	226'-4	16B	219	
	243'-0	17B	219	
28 TO 30	201'-4	16C	206	4' x 9' x 29'
	213'-10	16C	213	
	226'-4	17C	213	
	243'-0	18A	213	
31 TO 33	201'-4	16C	210	4' x 9' x 29'
	213'-10	16C	217	
	226'-4	17C	218	
	243'-0	18A	217	
34 TO 36	201'-4	17D	203	4' x 9' x 30'
	213'-10	17D	209	
	226'-4	17D	218	
	243'-0	18B	211	
37 TO 40	201'-4	17D	208	4' x 9' x 30'
	213'-10	17D	215	
	226'-4	18B	211	
	243'-0	18B	217	

(1) NOTE: PU, STRENGTH I DESIGN LOAD (KIPS) IS NOT THE VALUE USED IN THE FIELD FOR DRIVING PILES.

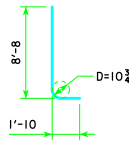

d2

NOTE: D = PIN DIAMETER. DIMENSIONS ARE OUT TO OUT.

FOOTING SIZE	REINFORCING STEEL (ONE FOOTING) BAR	NO., SIZE & SPACING	LENGTH	WEIGHT (LB.)	TOTAL WEIGHT (LB.)	STRUCTURAL CONCRETE (CY)
4' x 8' x 29'	d2	58 - #10 AS SHOWN	10'-6	2621	4071	34.4
	f1	29 - #5 @ 1'-0	7'-8	232		
	f2	8 - #5 @ 1'-0	28'-8	239		
	g1	29 - #6 @ 1'-0	7'-8	334		
	g2	11 - #7 @ 0'-9	28'-8	645		
4' x 9' x 29'	d2	58 - #10 AS SHOWN	10'-6	2621	4311	38.7
	f1	29 - #5 @ 1'-0	8'-8	262		
	f2	9 - #5 @ 1'-0	28'-8	269		
	g1	29 - #7 @ 1'-0	8'-8	514		
	g2	11 - #7 @ 0'-10	28'-8	645		
4' x 9' x 30'	d2	58 - #10 AS SHOWN	10'-6	2621	4723	40.0
	f1	30 - #5 @ 1'-0	8'-8	271		
	f2	9 - #5 @ 1'-0	29'-8	278		
	g1	34 - #7 @ 0'-10½	8'-8	602		
	g2	12 - #8 @ 0'-9	29'-8	951		

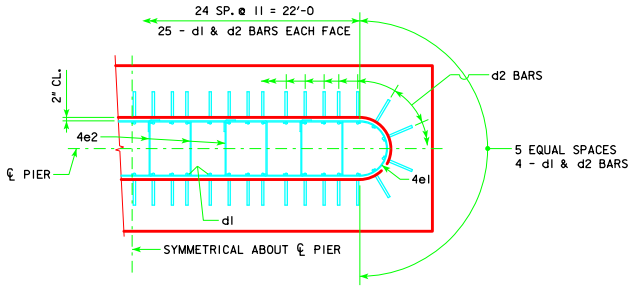

d2 LAYOUT

(SEE SECTION A-A ON SHEET H40-81-14.)

FOOTING NOTES:

THESE FOOTINGS ARE DESIGNED AND DETAILED TO BE USED WITH THE CAP AND COLUMN DETAILS OF THE TEE PIERS AS SHOWN ON SHEET H40-81-14.

BATTER PILES IN EXTERIOR ROWS 1:4 IN THE DIRECTION SHOWN.

STEEL PILING USED AS POINT BEARING SHALL HAVE A MINIMUM DISTANCE OF APPROXIMATELY 10 FEET FROM BOTTOM OF FOOTING TO TOP OF BEARING ROCK. THE PILE LAYOUTS ARE SUCH THAT THE DISTANCE CENTER TO CENTER OF ADJACENT PILING SHALL NOT EXCEED 8'-0.

PIER PILES SHALL BE DRIVEN TO VALUES SHOWN IN DESIGN PLANS.

LATEST REVISION DATE

APPROVED BY BRIDGE ENGINEER

IOWADOT Highway Division

STANDARD DESIGN - 40' ROADWAY, THREE SPAN BRIDGE

PRETENSIONED PRESTRESSED CONCRETE BEAM BRIDGES

SEPTEMBER, 2014

TEE PIER-HP10x57 SRL-2 STEEL PILE FOOTINGS

45° SKEW - H=25' TO 40'

H40-86-14