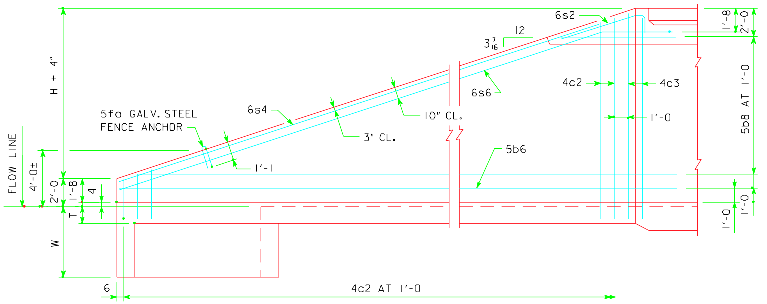

TYPICAL VIEW - FRONT FACE REINFORCING SHORT WINGWALL

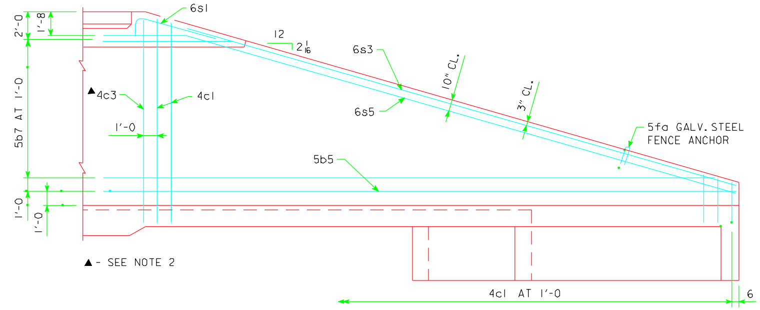

TYPICAL VIEW - FRONT FACE REINFORCING LONG WINGWALL

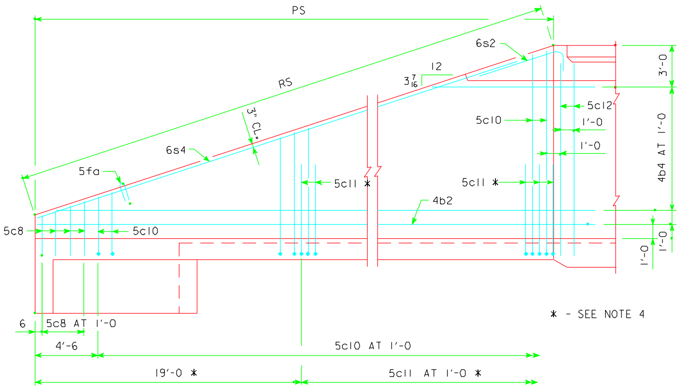

TYPICAL VIEW - BACK FACE REINFORCING SHORT WINGWALL

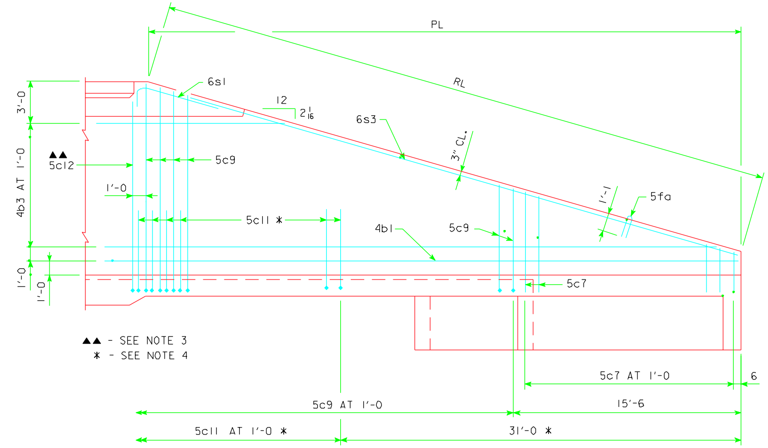

TYPICAL VIEW - BACK FACE REINFORCING LONG WINGWALL

CULVERT HEIGHT (H)	SLOPE Y
6'-0	3 1/2
8'-0	3 11/16
10'-0	3 13/16
12'-0	3 7/8

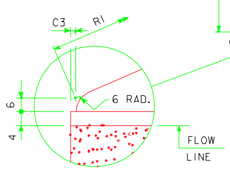

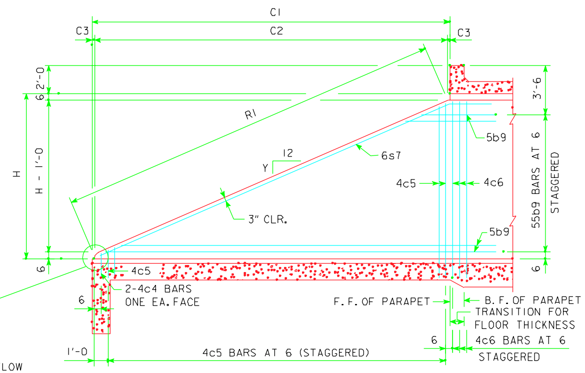

TYPICAL VIEW - INTERIOR WALL

HEADWALL NOTES:

1. BAR SPACINGS AND POSITIONS SHOWN ARE SIMILAR FOR ALL SIZES OF HEADWALLS IN THIS STANDARD.
2. ONE 4c3 BAR, HEADWALL HEIGHTS OF 6'-0, 8'-0, 12'-0 AND TWO 4c3 BARS, HEADWALL HEIGHTS OF 10'-0.
3. ONE 5c12 BAR, HEADWALL HEIGHTS OF 6'-0, 8'-0, 12'-0 AND TWO 5c12 BARS, HEADWALL HEIGHTS OF 10'-0.
4. NOT APPLICABLE TO HEADWALL HEIGHT OF H=6'-0.
5. FOR DIMENSION TABLE SEE SHEET TRH 45-1-01.

LATEST REVISION DATE :

APPROVED BY :

STANDARD DESIGN

FLARED WING HEADWALLS

FOR

TRIPLE REINFORCED CONCRETE BOX CULVERTS

IOWA DEPARTMENT OF TRANSPORTATION - HIGHWAY DIVISION

SEPT., 2001

TRH 45-5-01

TRH455.S01 - 09-01 THIS SHEET ISSUED.

XXXXXXXXXXSYSTEMTIME XXXXXXXUSERNAME XXXXXXXXXXXXXXXXXXXXXXXXXXXXXXXXXXXXXXXXXXXXXXXXXXXXXXXXXXXXXXDGNSPEC