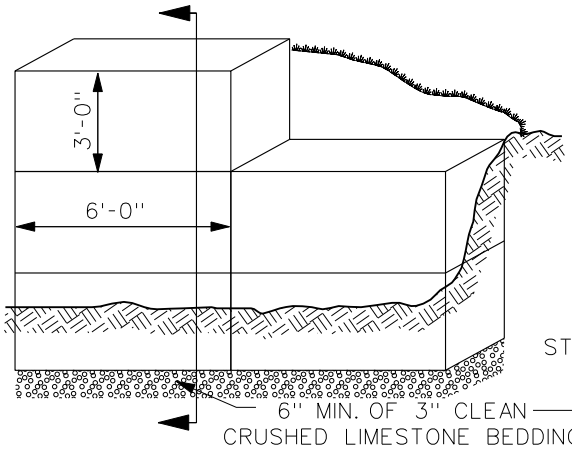

GABION WALLS

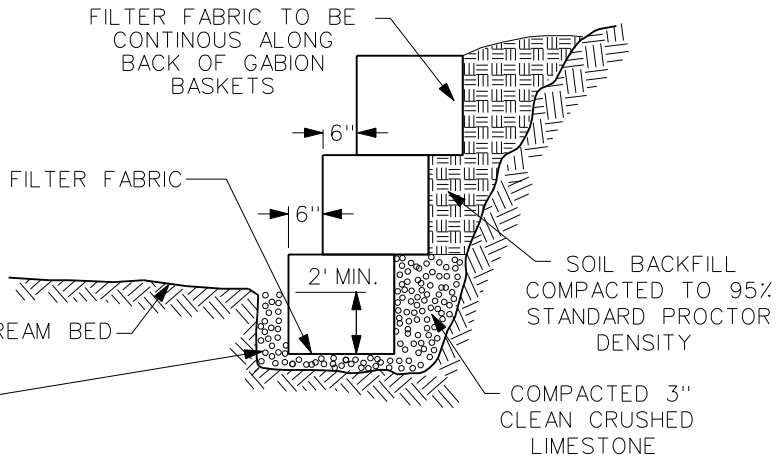

SECTION Y-Y

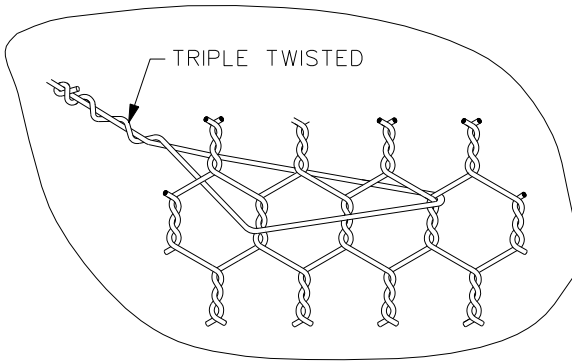

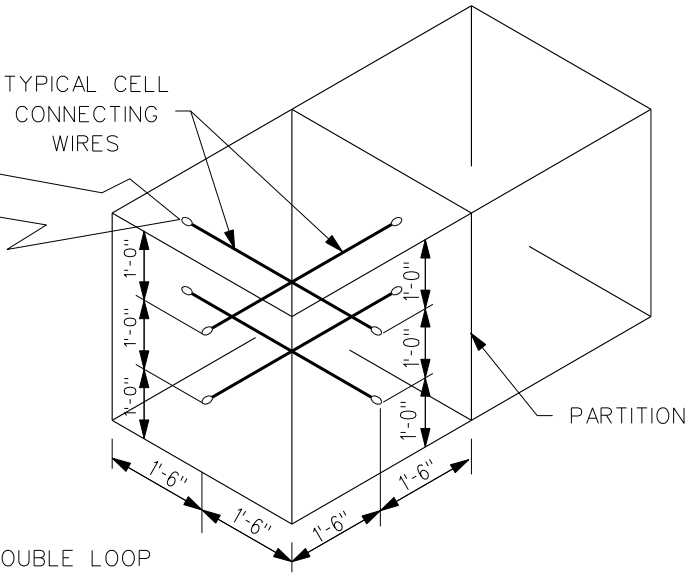

TYPICAL INTERIOR BASKET
WIRING DETAIL

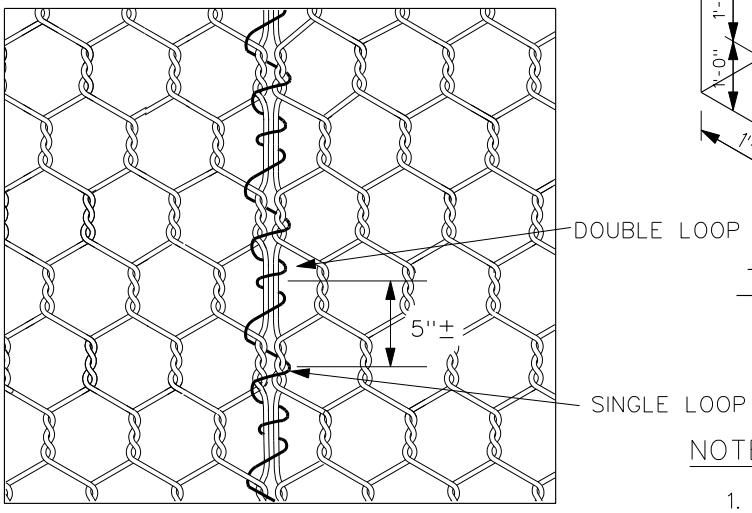

LACING DIAGRAM

NOTES:

1. SEE SECTION 9050 FOR MATERIALS
2. RING WIRE FASTENERS PER SECTION 9050 MAY BE SUBSTITUTED FOR LACING WIRE. ONE RING WIRE FASTENER SHALL BE USED IN EACH NET OPENING

REV.	DATE	BY	GABION WALL DETAILS	FIGURE: 9050.1
DATE: 01-01-98				SHEET 1 OF 1