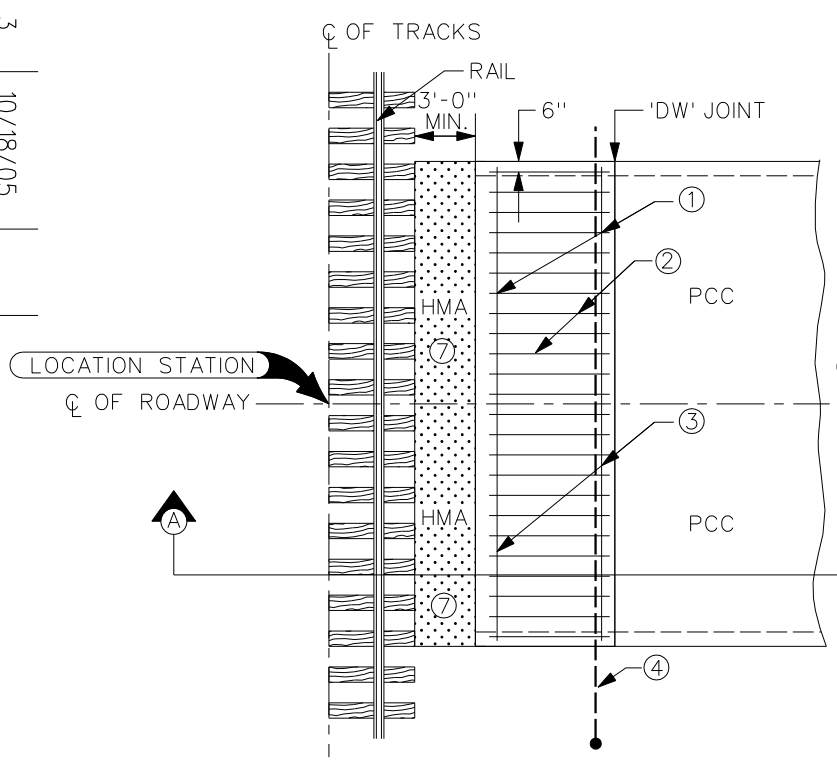

TYPICAL PLAN
STRAIGHT CROSSING

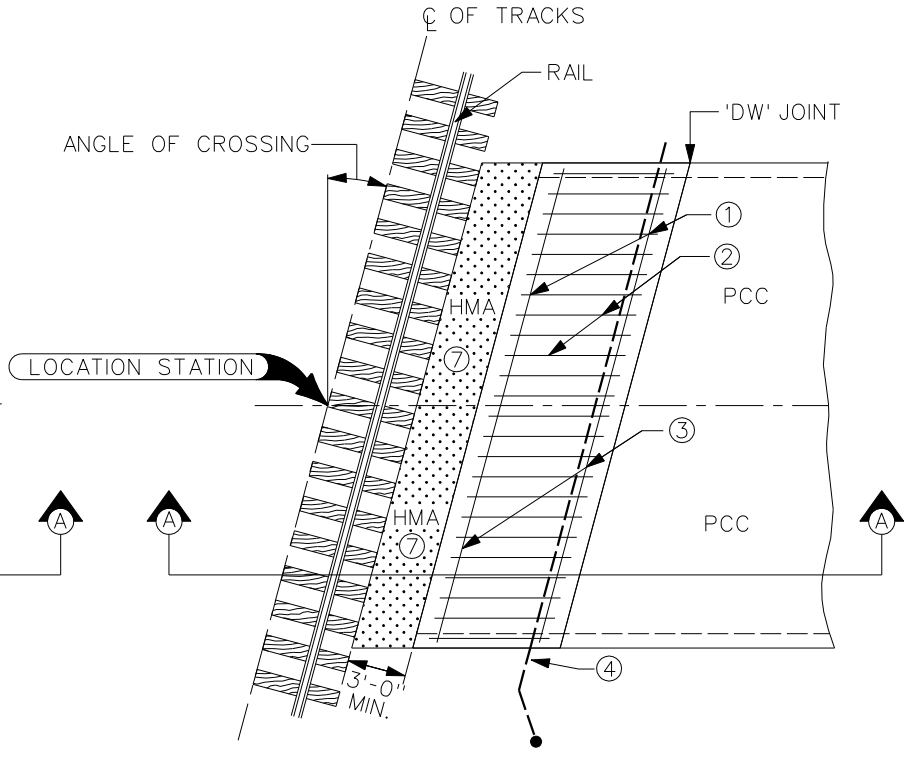

TYPICAL PLAN
SKEWED CROSSING

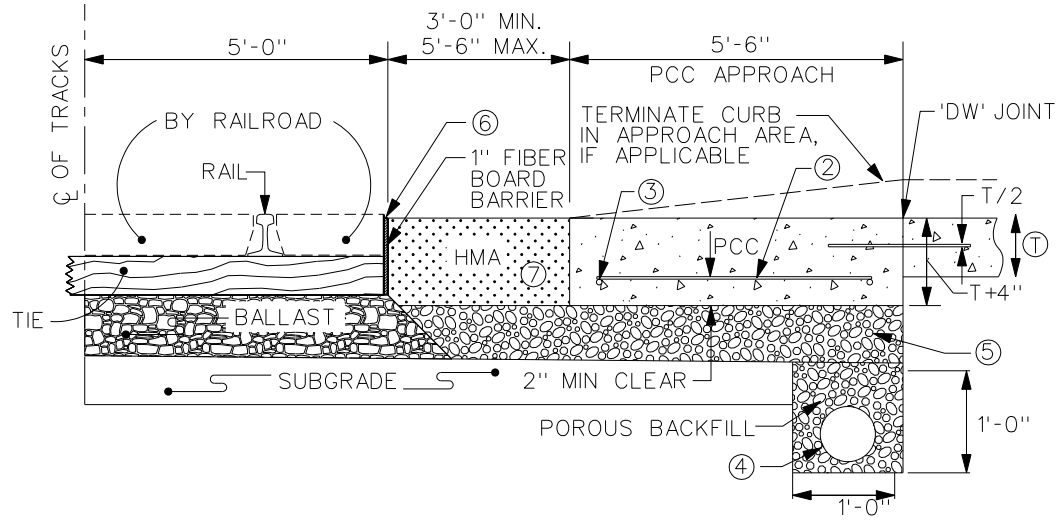

NOTES:

1. REINFORCING BARS SHALL BE WIRE TIED AT ALL INTERSECTIONS WITH OTHER BARS. REINFORCING BARS SHALL BE LAPPED A MINIMUM OF 1 FOOT WHEN NECESSARY AND SECURELY WIRE TIED
2. #5 BARS x 5'-2" @ 12" O.C.
3. #5 BARS x (APPROACH WIDTH - 4")
4. INSTALL 6" PERFORATED CMP SUBDRAIN, IF SPECIFIED. INCLUDE RODENT GUARD PER IOWA DOT I.M. 443.01.
5. SUBBASE: CLASS B, CLASS D, OR BALLAST MEETING RAILROAD SPECIFICATIONS.
6. FOR NEW CROSSINGS, PAVEMENT ELEVATION SHALL BE 1/2" - 1" BELOW TOP OF RAIL. FOR EXISTING CROSSINGS, PAVEMENT ELEVATION SHALL BE LEVEL TO 1/2" BELOW TOP OF RAIL
7. HMA SHALL MEET FULL-DEPTH PATCH REQUIREMENTS OF SECTION 7040. CONTRACT DOCUMENTS OR RAILROAD MAY REQUIRE THE PCC APPROACH TO ABUT THE CROSSING WITHOUT THE HMA

REV.	DATE	BY
3	10/18/05	

DATE: 01-01-98

PCC RAILROAD CROSSING APPROACH

FIGURE: 7010.10

SHEET 1 OF 1