TYPE 4

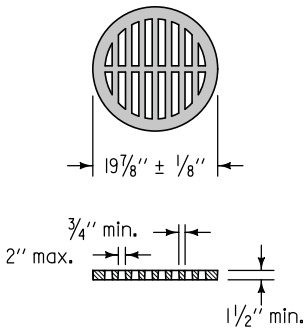

TYPE 4A
For Placement on 18'' RCP

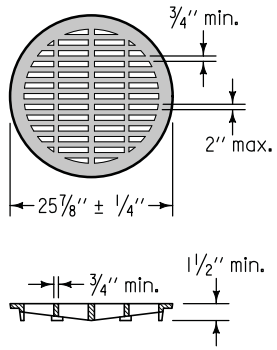

TYPE 4B
For Placement on 24'' RCP

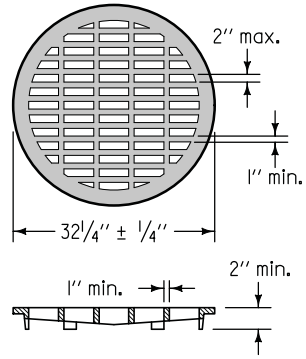

TYPE 4C
For Placement on 30'' RCP

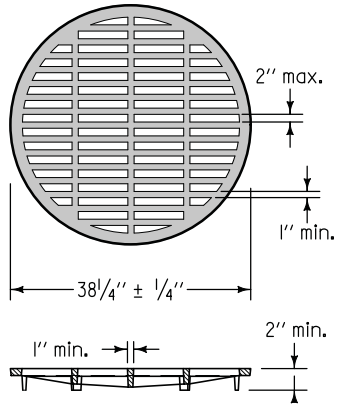

TYPE 4D
For Placement on 36'' RCP

TYPE 3
(Light Duty)

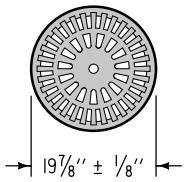

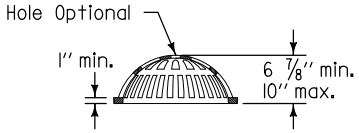

TYPE 3A
For Placement on 18'' RCP

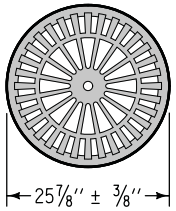

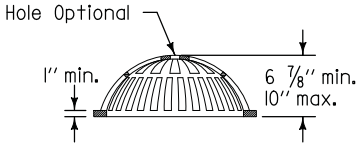

TYPE 3B
For Placement on 24'' RCP

TYPE 5
(Light Duty)
For Placement on 24'' to 30'' RCP

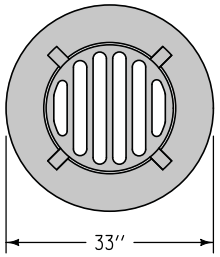

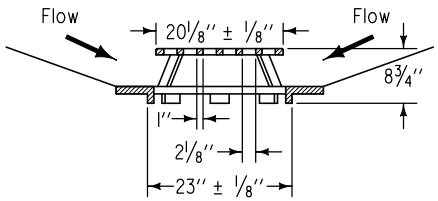

SUDAS	Iowa Department of Transportation	REVISION 1 10-20-09
FIGURE 6010.604	STANDARD ROAD PLAN	SW-604 SHEET 1 of 2

REVISIONS: Added Type 9 Grate to sheet 2. Added shading.

SUDAS DIRECTOR — DESIGN METHODS ENGINEER

CASTINGS FOR AREA INTAKES

FIGURE 6010.604 SHEET 1 OF 2

TYPE 6

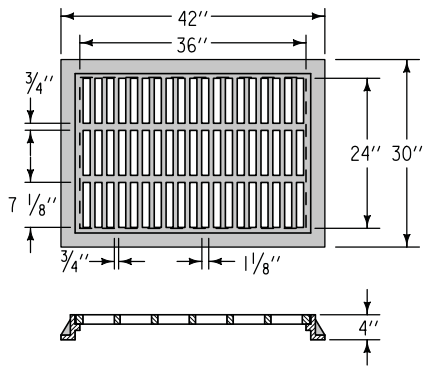

TYPE 9

(Light Duty)

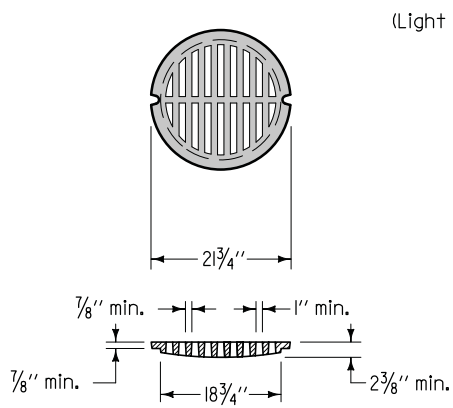

GRATE ①

Minimum Weight = 85 lbs.

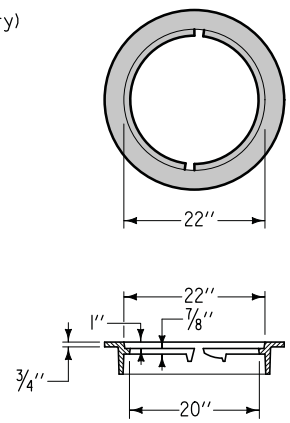

FRAME

Minimum Weight = 75 lbs.

① Cast grate without locking lugs so it may be used in an inverted position.

SUDAS	Iowa Department of Transportation	REVISION 1 10-20-09
FIGURE 6010.604	STANDARD ROAD PLAN	SW-604 SHEET 2 of 2

REVISIONS: Added Type 9 Grate to sheet 2. Added shading.

SUDAS DIRECTOR — DESIGN METHODS ENGINEER

CASTINGS FOR AREA INTAKES

FIGURE 6010.604 SHEET 2 OF 2