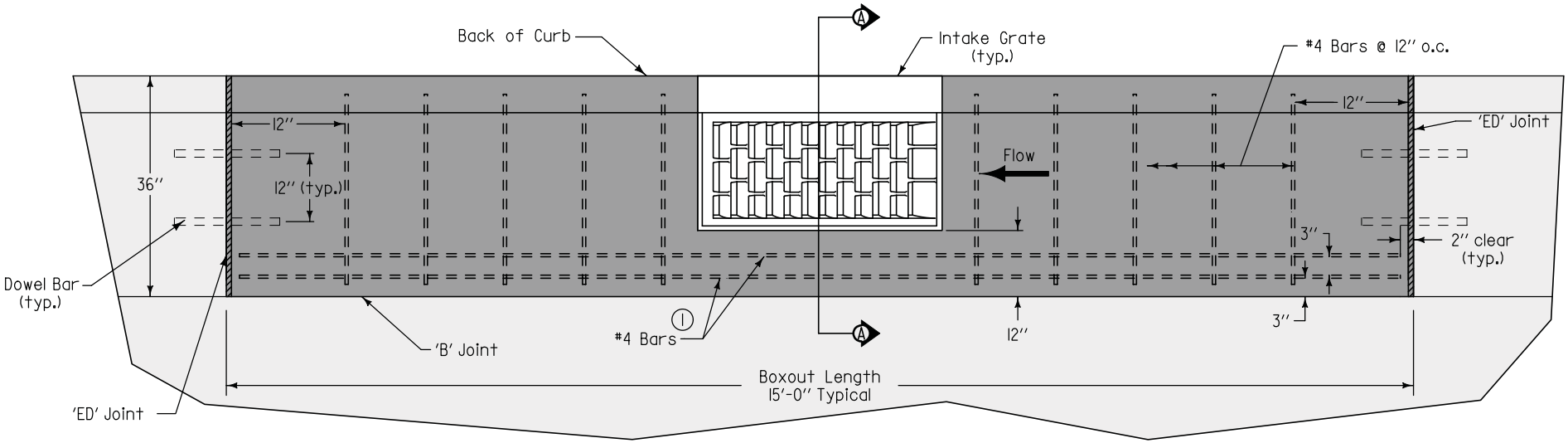

BOXOUT IN PCC PAVEMENT AND PCC BASE WITH HMA OVERLAY

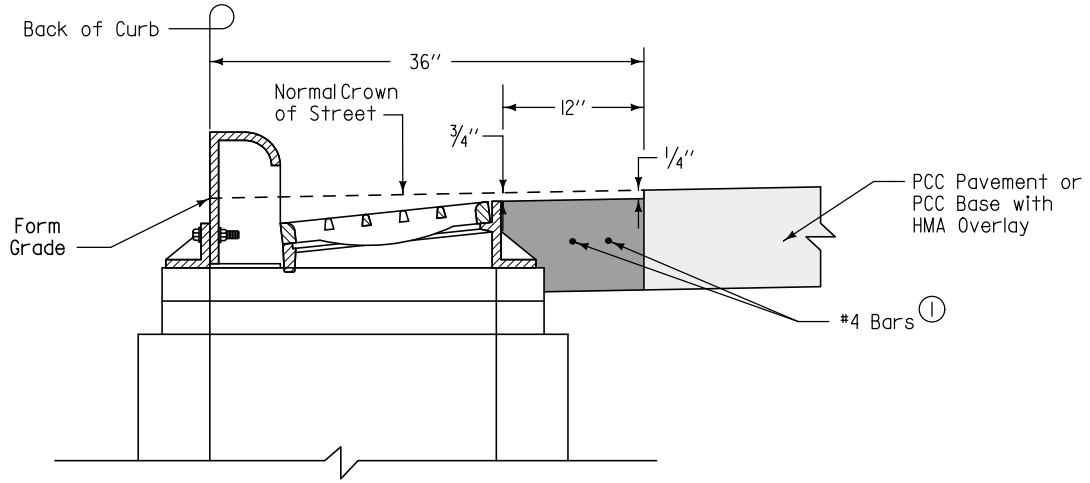

SECTION A-A

Transverse joint spacing on new concrete pavement is controlled by the intake boxout. Adjust adjacent joint spacing as required to accommodate boxouts.

For retrofit intakes, match existing concrete pavement joints. Stop any transverse pavement joints that do not conform to the minimum spacing requirements at the edge of the boxout.

(1) Center bars vertically within slab.

SUDAS	Iowa Department of Transportation	REVISION NEW 04-21-09
FIGURE 6010.514	STANDARD ROAD PLAN	SW-514 SHEET 1 of 3

REVISIONS: New. Replaces SUDAS Figure 6030.16.

SUDAS DIRECTOR — DESIGN METHODS ENGINEER

BOXOUTS FOR GRATE INTAKES

FIGURE 6010.514 SHEET 1 OF 3

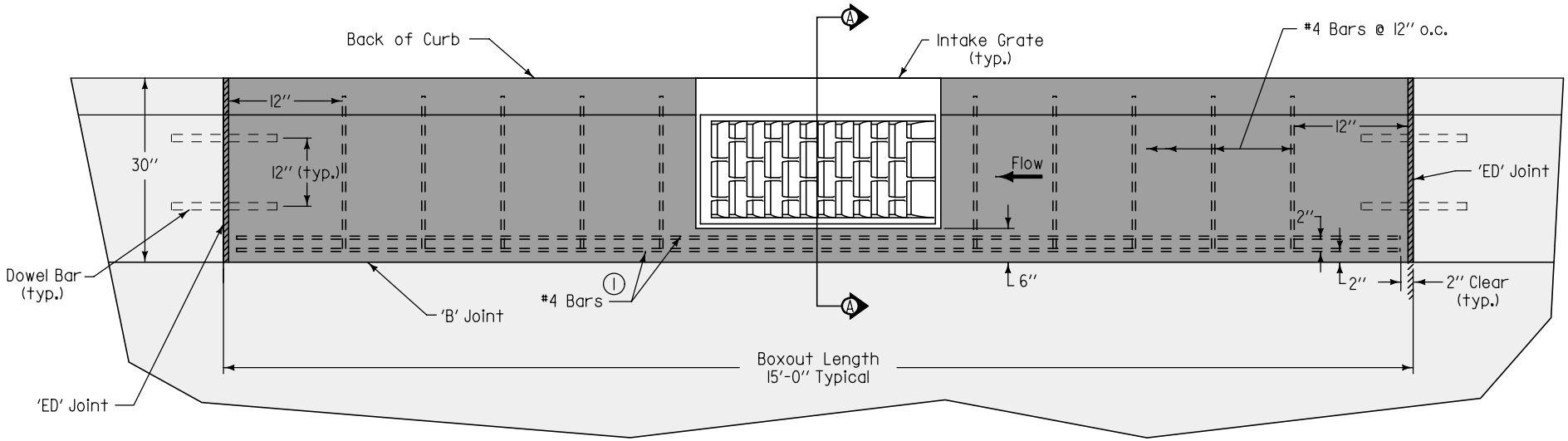

BOXOUT IN PCC CURB AND GUTTER

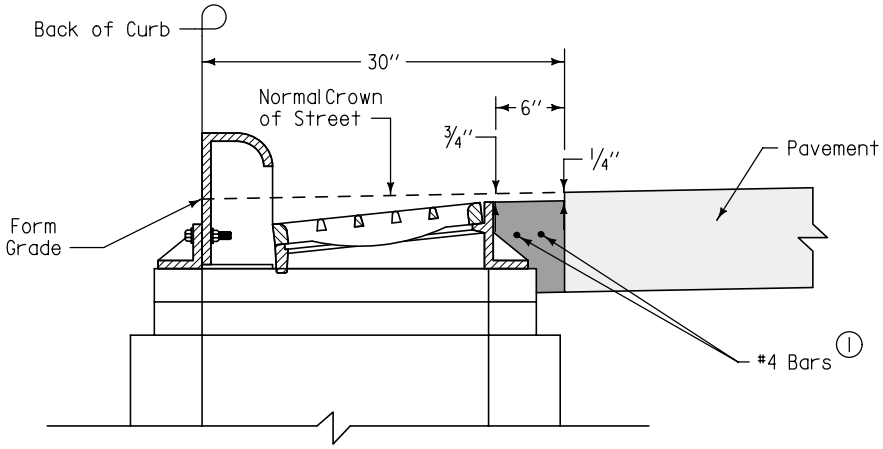

SECTION A-A

1 Center bars vertically within slab.

SUDAS	Iowa Department of Transportation	REVISION NEW 04-21-09
FIGURE 6010.514	STANDARD ROAD PLAN	SW-514 SHEET 2 of 3

REVISIONS: New. Replaces SUDAS Figure 6030.16.

SUDAS DIRECTOR — DESIGN METHODS ENGINEER

BOXOUTS FOR GRATE INTAKES

FIGURE 6010.514 SHEET 2 OF 3

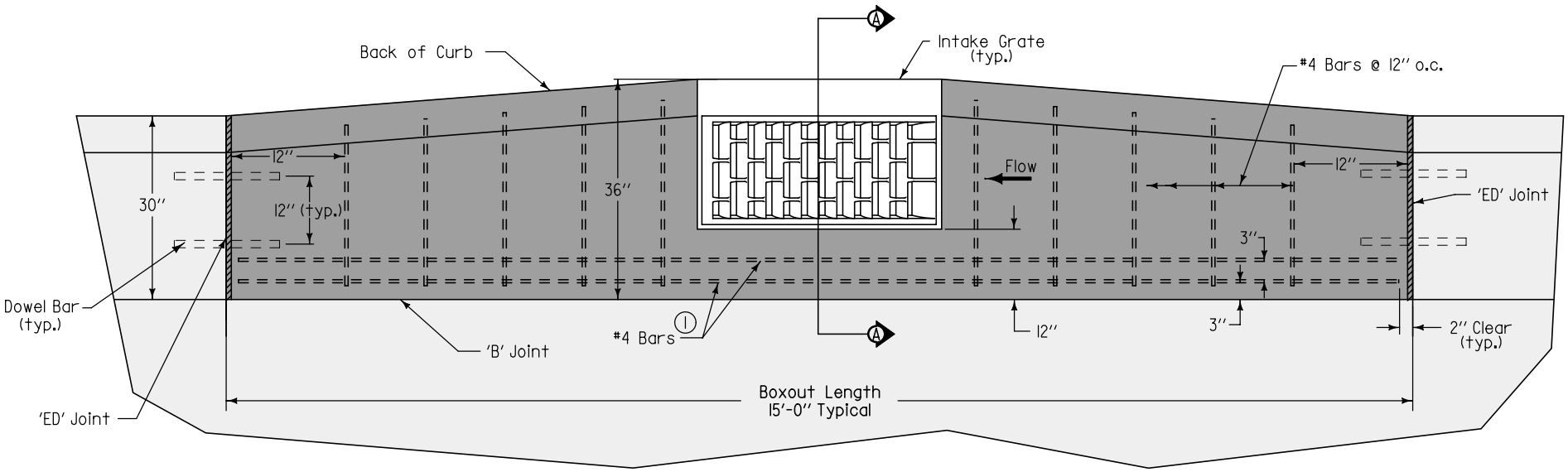

ALTERNATE BOXOUT IN PCC CURB AND GUTTER

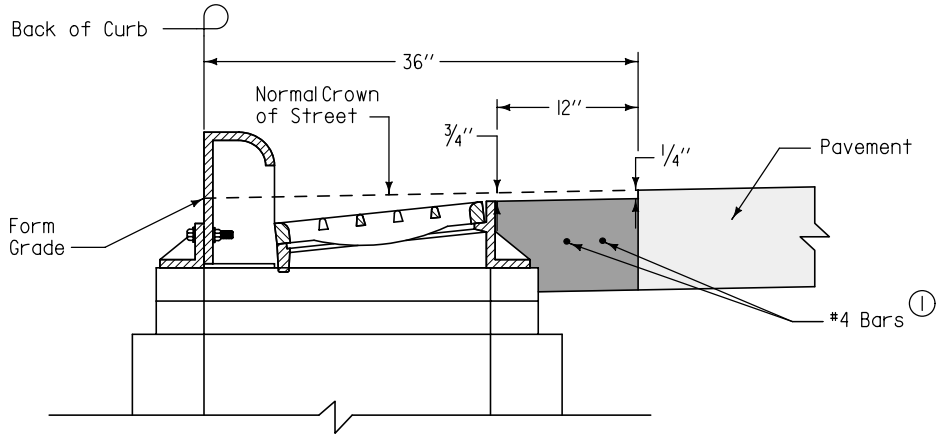

SECTION A-A

Transverse joint spacing on new concrete pavement is controlled by the intake boxout. Adjacent joint spacing may need to be field adjusted to fit boxouts.

For retrofit intakes, match existing concrete pavement joints. Stop any transverse pavement joints that do not conform to the minimum spacing requirements at the edge of the boxout.

(1) Center bars vertically within slab.

SUDAS	Iowa Department of Transportation	REVISION NEW 04-21-09
FIGURE 6010.514	STANDARD ROAD PLAN	SW-514 SHEET 3 of 3

REVISIONS: New. Replaces SUDAS Figure 6030.16.

SUDAS DIRECTOR — DESIGN METHODS ENGINEER

BOXOUTS FOR GRATE INTAKES

FIGURE 6010.514 SHEET 3 OF 3