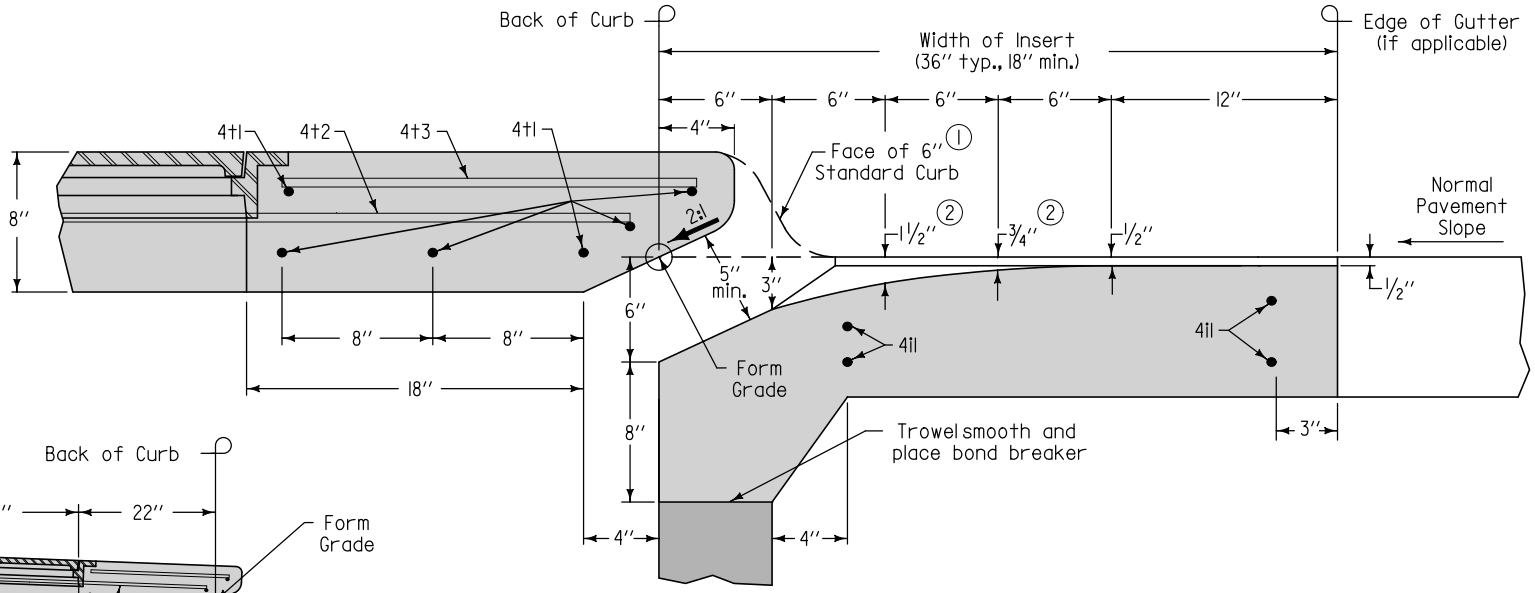

INSERT

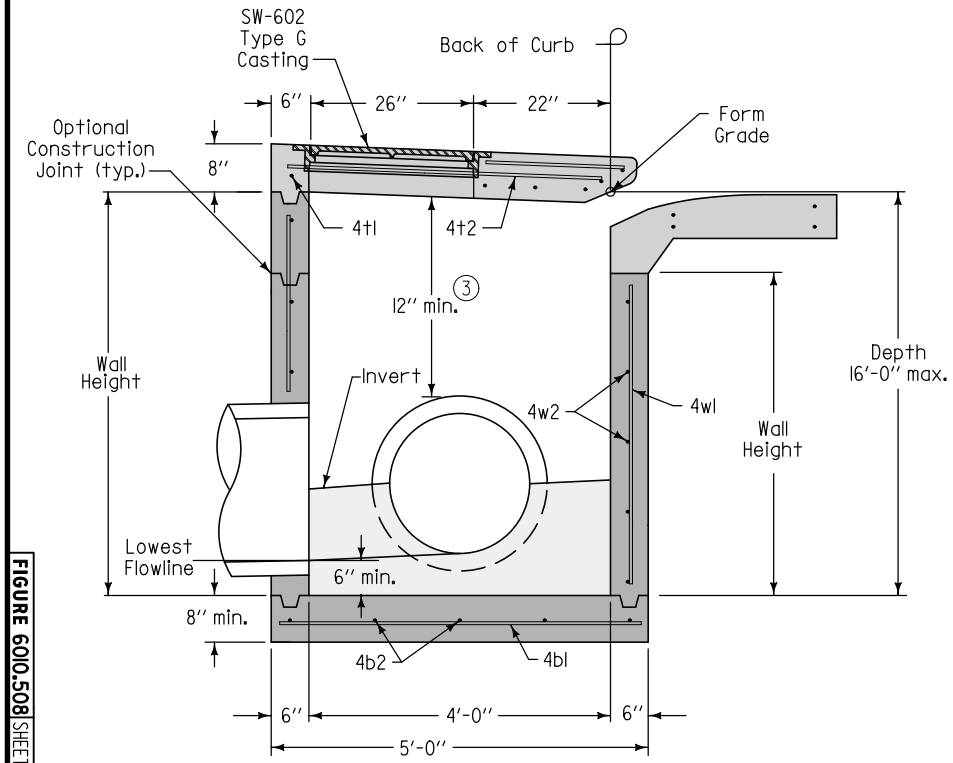

TYPICAL SECTION

1. Modify dimensions as required to accommodate other curb heights when specified.
2. Insert shaping may be modified for insert widths less than 36 inches. For an 18-inch insert, reduce dimensions indicated by 1/2 inch.
3. 12-inch minimum wall height above all pipes.

SUDAS	Iowa Department of Transportation	REVISION 1	10-20-09
FIGURE 6010.508	STANDARD ROAD PLAN	SW-508	SHEET 1 of 2

REVISIONS: Adjusted depth line and shading. Removed minimum dimension. Renamed standard.

SUDAS DIRECTOR — DESIGN METHODS ENGINEER

SINGLE OPEN-THROAT CURB INTAKE, LARGE BOX

FIGURE 6010.508 SHEET 1 OF 2

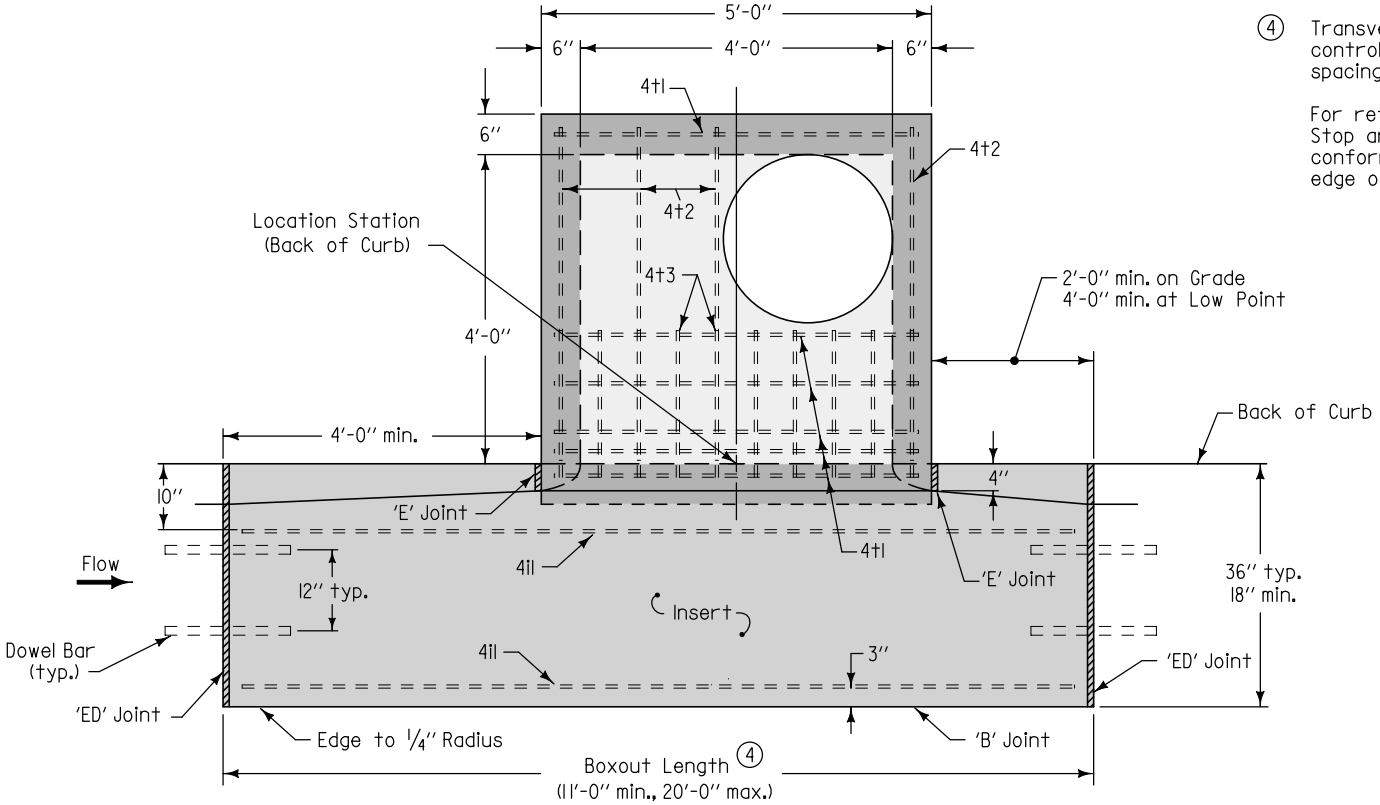

PLAN

4 Transverse joint spacing on new concrete pavement is controlled by the intake boxout. Adjust adjacent joint spacing as required to accommodate boxouts.

For retrofit intakes, match existing pavement joints. Stop any transverse pavement joints that do not conform to the minimum spacing requirements at the edge of the insert area.

MAXIMUM PIPE DIAMETERS	
Precast Structure	Cast-in-place Structure
30"	36"

REINFORCING BAR LIST						
Mark	Size	Location	Shape	Count	Length	Spacing
4t1	4	Top	——	7	4'-8"	See Insert
4t2	4	Top	——	4	4'-6"	12"
4t3	4	Top	——	10	1'-10"	6"
4b1	4	Base	——	6	4'-6"	11"
4b2	4	Base	——	6	4'-6"	11"
4i1	4	Insert	——	4	Boxout Length minus 8"	See Plan
4w1	4	Walls	——	16	Wall Height minus 4"	14"
4w2	4	Walls	——	Varies	4'-8"	12"
4w3	4	Walls	——	Varies	4'-8"	12"

SUDAS | Iowa Department of Transportation

REVISION 1 10-20-09

FIGURE 6010.508 | STANDARD ROAD PLAN | SW-508

SHEET 2 of 2

REVISIONS: Adjusted depth line and shading. Removed minimum dimension. Renamed standard.

SUDAS DIRECTOR | DESIGN METHODS ENGINEER

SINGLE OPEN-THROAT CURB INTAKE, LARGE BOX

FIGURE 6010.508 SHEET 2 OF 2